# Hausmann Werkzeuge



Edgar Hausmann GmbH
Förster-Busch-Strasse 10
D-34346 Hann. Münden
Germany

Telefon: +49 (0)5545 91030
Fax: +49 (0)5545 91125
info@hausmann.aero
www.hausmann.aero

Catalog No. 03



info@hausmann.aero

# Heftnadeln für Bohrschablonen
# TEMPORARY FASTENERS FOR DRILL JIGGS

**Temporary Fasteners for Drill Jiggs with large clamping area and flexible diameters and clamping lengths**





**Heftnadeln für Bohrschablonen mit großer Auflagefläche und flexibel angepassten Durchmessern / Längen**







## Features

- Completely flexible for any clamping diameter starting from 1/8” (3.20 mm)
- Spring Loaded Available
- Very long clamping length possible (less fasteners needed)
- Clamping force reaches up to 1500 NM on a small diameter of 3.20 mm (more clamping force for larger diameters)
- Large clamping area due to the front end divided in 4 sections.
- Torque-controlled and battery powered Driver available

**EH10 / EH15**



**EH20 / EH25**



## Eigenschaften



- Flexibler Durchmesser ab 3,20 mm (1/8”)
- Mit Nachspannfeder erhältlich
- Sehr großer Spannbereich möglich (es werden weniger Heftnadeln benötigt)
- Klemmkraft bis 1500 NM bei dem kleinsten Durchmesser von 3.2 mm (mehr Klemmkraft bei größeren Durchmessern möglich)
- Große Auflagefläche durch den 4 geteilten Auflagebereich und das Design der Nadel
- Drehmomentgesteuertes, batteriebetriebenes Einsetzwerkzeug verfügbar

**EH100**



**EH30**



**Weitere Informationen auf Anfrage** / MORE INFORMATION ON REQUEST

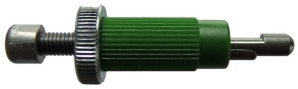

**Schraubheftnadeln, mit Schutzkappe und Rändelmutter**
FASTENERS WITH KNURLED NUT AND SAFETY CAP

| **Art.Nr.**/PART NO. | **Durchmesser** | DIAMETER | **Spannber.** | GRIP | **Farbe** | COLOR |
|---|---|---|---|---|---|---|
| **2072KU-20** | 2,0 mm | 5/64“ | 0-6 mm | 0-1/4" | schwarz | black |
| **2072KU-24** | 2,4 mm | 3/32“ | 0-6 mm | 0-1/4" | braun | brown |
| **2072KU-26** | 2,6 mm | #38 | 0-6 mm | 0-1/4" | blau | blue |
| **2072KU-32** | 3,2 mm | 1/8“ | 0-6 mm | 0-1/4" | rot | red |
| **2072KU-35** | 3,5 mm | 9/64“ | 0-6 mm | 0-1/4" | grau | grey |
| **2072KU-40** | 4,0 mm | 5/32“ | 0-6 mm | 0-1/4" | gelb | yellow |
| **2072KU-45** | 4,5 mm | #16 | 0-6 mm | 0-1/4" | transparent | transparent |
| **2072KU-48** | 4,8 mm | 3/16“ | 0-6 mm | 0-1/4" | grün | green |
| **2072KU-50** | 5,0 mm | #9 | 0-6 mm | 0-1/4" | schwarz | black |
| **2072KU-56** | 5,6 mm | 7/32“ | 0-10 mm | 0-3/8“ | weiß | white |



**Schraubheftnadeln, lang, mit Schutzkappe und Rändelmutter**
FASTENERS, LONG, WITH KNURLED NUT AND SAFETY CAP

| **Art.Nr.**/PART NO. | **Durchmesser** | DIAMETER | **Spannber.** | GRIP | **Farbe** | COLOR |
|---|---|---|---|---|---|---|
| **2072KU-24 x 15** | 2,4 mm | 3/32“ | 5-15 mm | 3/16-19/32“ | braun | brown |
| **2072KU-26 x 15** | 2,6 mm | #38 | 5-15 mm | 3/16-19/32“ | blau | blue |
| **2072KU-32 x 15** | 3,2 mm | 1/8“ | 5-15 mm | 3/16-19/32“ | rot | red |
| **2072KU-35 x 15** | 3,5 mm | 9/64“ | 5-15 mm | 3/16-19/32“ | grau | grey |
| **2072KU-40 x 15** | 4,0 mm | 5/32“ | 5-15 mm | 3/16-19/32“ | gelb | yellow |
| **2072KU-45 x 15** | 4,5 mm | #16 | 5-15 mm | 3/16-19/32“ | transparent | transparent |
| **2072KU-48 x 15** | 4,8 mm | 3/16“ | 5-15 mm | 3/16-19/32“ | grün | green |
| **2072KU-50 x 15** | 5,0 mm | #9 | 5-15 mm | 3/16-19/32“ | schwarz | black |
| **2072KU-56 x 15** | 5,6 mm | 7/32“ | 5-15 mm | 3/16-19/32“ | weiß | white |
| **2072KU-60 x 15** | 6,0 mm | 15/64“ | 0-15 mm | 0-19/32“ | braun | brown |
| **2072KU-64 x 15** | 6,4 mm | 1/4“ | 0-15 mm | 0-19/32“ | silber | silver |



**Schraubheftnadeln, extra lang, mit Schutzkappe und Rändelmutter**
FASTENERS, EXTRA LONG, WITH KNURLED NUT AND SAFETY CAP

| **Art.Nr.**/PART NO. | **Durchmesser** | DIAMETER | **Spannber.** | GRIP | **Farbe** | COLOR |
|---|---|---|---|---|---|---|
| **2072KU-32 x 10-25** | 3,2 mm | 1/8“ | 10-25 mm | 3/8"-1" | rot | red |
| **2072KU-40 x 10-25** | 4,0 mm | 5/32“ | 10-25 mm | 3/8"-1" | gelb | yellow |
| **2072KU-48 x 10-25** | 4,8 mm | 3/16“ | 10-25 mm | 3/8"-1" | grün | green |
| **2072KU-60 x 10-25** | 6,0 mm | 15/64“ | 10-25 mm | 3/8"-1" | braun | brown |
| **2072KU-64 x 10-25** | 6,4 mm | 1/4“ | 10-25 mm | 3/8"-1" | silber | silver |

**Schraubglocken für Schraubheftnadeln mit Rändelmutter**
NUT SETTER FOR FASTENERS WITH KNURLED NUTS

## 2072KU & MBBN723A

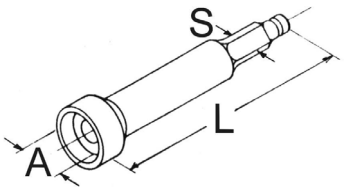




**452025**



**452016**



**MBBN513E6,3-85**

| **Art.Nr.** / PART NO. | **A** | **L** | **S = Sechskant /** HEX SHANK | **Empfohlen für Heftnadeln mit:** Recommend for Fasteners with: **Durchmesser** Diameter | **Spannbereich** Grip Range |
|---|---|---|---|---|---|
| **MBBN513E6,3-85** | **16,5 mm** (0.65") | **85 mm** (3.35") | **1/4"** (6,35 mm) DIN3126E6,3 | 2,0 - 5,9 mm | 0-15 mm |
| **MBBN513E8-85** | **16,5 mm** (0.65") | **85 mm** (3.35") | **5/16"** (7,94 mm) DIN3126E8 | 2,0 - 5,9 mm | 0-15 mm |
| **452012** | **16,5 mm** (0.65") | **85 mm** (3.35") | **1/4"** (6,35 mm) DIN3126E6,3 | 2,0 - 5,9 mm | 0-15 mm |
| **452025** | **16,5 mm** (0.65") | **85 mm** (3.35") | **5/16"** (7,94 mm) DIN3126E8 | 2,0 - 5,9 mm | 0-15 mm |
| **452026** | **16,5 mm** (0.65") | **112 mm** (4.41") | **5/16"** (7,94 mm) DIN3126E8 | 2,0 - 5,9 mm | 0-25 mm |
| **452023** | **18,5 mm** (0.73") | **85 mm** (3.35") | **5/16"** (7,94 mm) DIN3126E8 | 6,0 - 6,4 mm | 0-15 mm |
| **452016** | **18,5 mm** (0.73") | **112 mm** (4.41") | **1/4"** (6,35 mm) DIN3126E6,3 | 6,0 - 6,4 mm | 0-25 mm |
| **452024** | **18,5 mm** (0.73") | **112 mm** (4.41") | **5/16"** (7,94 mm) DIN3126E8 | 6,0 - 6,4 mm | 0-25 mm |

**Andere Abmessungen auf Anfrage /** OTHER DIMENSIONS ON REQUEST



**Federheftnadel, zangenbetätigt**
FASTENERS, SPRING-LOADED, PLIER-OPERATED

| **Art.Nr.**/PART NO. | **Durchmesser** | DIAMETER | **Spannber.** | GRIP | **Farbe** | COLOR |
|---|---|---|---|---|---|---|
| **2071Z-20** | 2,0 mm | 5/64“ | 0-6 mm | 0-1/4" | schwarz | black |
| **2071Z-24** | 2,4 mm | 3/32“ | 0-6 mm | 0-1/4" | braun | brown |
| **2071Z-26** | 2,6 mm | #38 | 0-6 mm | 0-1/4" | silber | silver |
| **2071Z-32** | 3,2 mm | 1/8“ | 0-6 mm | 0-1/4" | kupfer | copper |
| **2071Z-40** | 4,0 mm | 5/32“ | 0-6 mm | 0-1/4" | gelb | yellow |
| **2071Z-48** | 4,8 mm | 3/16“ | 0-6 mm | 0-1/4" | silber | silver |



**Federheftnadel, zangenbetätigt**
FASTENERS, SPRING-LOADED, PLIER-OPERATED

| **Art.Nr.**/PART NO. | | **Durchmesser** | DIAMETER | **Spannber.** | GRIP | **Farbe** | COLOR |
|---|---|---|---|---|---|---|---|
| KWIK-LOK | WEDGELOCK | | | | | | |
| **K-1/16** | **M-1/16** | 1,6 mm | 1/16" | 0-6 mm | 0-1/4" | schwarz | black |
| **K-7/32** | **M-7/32** | 5,6 mm | 7/32“ | 0-6 mm | 0-1/4“ | zink | zinc |
| **K-1/4** | **M-1/4** | 6,4 mm | ¼“ | 0-6 mm | 0-1/4“ | kupfer | copper |



**Federheftnadel, zangenbetätigt**
FASTENERS, SPRING-LOADED, PLIER-OPERATED

| **Art.Nr.**/PART NO. | | **Durchmesser** | DIAMETER | **Spannber.** | GRIP | **Farbe** | COLOR |
|---|---|---|---|---|---|---|---|
| KWIK-LOK | WEDGELOCK | | | | | | |
| **KHD-3/32** | **MHD-3/32** | 2,4 mm | 3/32“ | 0-12,7 mm | 0-1/2" | zink | zinc |
| **KHD-1/8** | **MHD-1/8** | 3,2 mm | 1/8“ | 0-12,7 mm | 0-1/2" | kupfer | copper |
| **KHD-5/32** | **MHD-5/32** | 4,0 mm | 5/32“ | 0-12,7 mm | 0-1/2" | schwarz | black |
| **KHD-3/16** | **MHD-3/16** | 4,8 mm | 3/16“ | 0-12,7 mm | 0-1/2" | messing | brass |
| **KHD-7/32** | **MHD-7/32** | 5,6 mm | 7/32“ | 0-12,7 mm | 0-1/2" | zink | zinc |
| **KHD-1/4** | **MHD-1/4** | 6,4 mm | 1/4“ | 0-12,7 mm | 0-1/2" | kupfer | copper |



**Federheftnadel, handbetätigt**
FASTENERS, SPRING-LOADED, HAND-OPERATED

| **Art.Nr.**/PART NO. | **Durchmesser** | DIAMETER | **Spannber.** | GRIP | **Farbe** | COLOR |
|---|---|---|---|---|---|---|
| **2071HZ-32** | 3,2 mm | 1/8“ | 0-6 mm | 0-1/4" | kupfer | copper |

## Heftnadelzange, für Heftnadeln und Blechklemmen
PLIER FOR FASTENERS AND CLAMPS



**Art.Nr.**/PART NO.
**TP-74**



**Art.Nr.**/PART NO.
**2050**

**Andere Abmessungen auf Anfrage /** OTHER DIMENSIONS ON REQUEST



**Schraubheftnadeln, mit Sechskantmutter**
FASTENERS, HEX NUT TYPE

| **Art.Nr.**/PART NO. | | **Durchmesser** (D) | DIAMETER (D) | **Spannber.** (G) | GRIP (G) | **Farbe** | COLOR |
|---|---|---|---|---|---|---|---|
| **HEX NUT PART NO.** | **CROSS REF. EQUIVALENT** | | | | | | |
| **KHN-FW-3/32** | **HNX-SF-3/32** | 2,4 mm | 3/32“ | 0-12,7 mm | 0-1/2“ | silber | silver |
| **KHN-FW-1/8** | **HNX-SF-1/8** | 3,2 mm | 1/8“ | 0-12,7 mm | 0-1/2“ | kupfer | copper |
| **KHN-FW-5/32** | **HNX-SF-5/32** | 4,0 mm | 5/32“ | 0-12,7 mm | 0-1/2“ | schwarz | black |
| **KHN-FW-3/16** | **HNX-SF-3/16** | 4,8 mm | 3/16“ | 0-12,7 mm | 0-1/2“ | messing | brass |
| **KHN-FW-7/32** | **HNX-SF-7/32** | 5,6 mm | 7/32“ | 0-12,7 mm | 0-1/2“ | silber | silver |
| **KHN-FW-1/4** | **HNX-SF-1/4** | 6,4 mm | 1/4" | 0-12,7 mm | 0-1/2“ | kupfer | copper |
| **KHN-FW-5/16** | **HNX-SF-5/16** | 7,9 mm | 5/16“ | 0-12,7 mm | 0-1/2“ | schwarz | black |
| | | | | | | | |
| **KHNL-FW-3/32** | **HNXL-SF-3/32** | 2,4 mm | 3/32“ | 0-25,4 mm | 0-1“ | silber | silver |
| **KHNL-FW-1/8** | **HNXL-SF-1/8** | 3,2 mm | 1/8“ | 0-25,4 mm | 0-1“ | kupfer | copper |
| **KHNL-FW-5/32** | **HNXL-SF-5/32** | 4,0 mm | 5/32“ | 0-25,4 mm | 0-1“ | schwarz | black |
| **KHNL-FW-3/16** | **HNXL-SF-3/16** | 4,8 mm | 3/16“ | 0-25,4 mm | 0-1“ | messing | brass |
| **KHNL-FW-7/32** | **HNXL-SF-7/32** | 5,6 mm | 7/32“ | 0-25,4 mm | 0-1“ | silber | silver |
| **KHNL-FW-1/4** | **HNXL-SF-1/4** | 6,4 mm | 1/4“ | 0-25,4 mm | 0-1“ | kupfer | copper |
| **KHNL-FW-5/16** | **HNXL-SF-5/16** | 7,9 mm | 5/16“ | 0-25,4 mm | 0-1“ | schwarz | black |
| | | | | | | | |
| **KHNEL-FW-3/32** | **HNXEL-SF-3/32** | 2,4 mm | 3/32“ | 12,7-38,1 mm | 1/2-1.1/2“ | silber | silver |
| **KHNEL-FW-1/8** | **HNXEL-SF-1/8** | 3,2 mm | 1/8“ | 12,7-38,1 mm | 1/2-1.1/2“ | kupfer | copper |
| **KHNEL-FW-5/32** | **HNXEL-SF-5/32** | 4,0 mm | 5/32“ | 12,7-38,1 mm | 1/2-1.1/2“ | schwarz | black |
| **KHNEL-FW-3/16** | **HNXEL-SF-3/16** | 4,8 mm | 3/16“ | 12,7-38,1 mm | 1/2-1.1/2“ | messing | brass |
| **KHNEL-FW-1/4** | **HNXEL-SF-1/4** | 6,4 mm | 1/4“ | 12,7-38,1 mm | 1/2-1.1/2“ | kupfer | copper |
| **KHNEL-FW-5/16** | **HNXEL-SF-5/16** | 7,9 mm | 5/16“ | 12,7-38,1 mm | 1/2-1.1/2“ | schwarz | black |
| | | | | | | | |
| **KHNK-FW-1/8** | **HNXK-SF-1/8** | 3,2 mm | 1/8“ | 38,1-63,5 mm | 1.1/2-2.1/2“ | kupfer | copper |
| **KHNK-FW-5/32** | **HNXK-SF-5/32** | 4,0 mm | 5/32“ | 38,1-63,5 mm | 1.1/2-2.1/2“ | schwarz | black |
| **KHNK-FW-3/16** | **HNXK-SF-3/16** | 4,8 mm | 3/16“ | 38,1-63,5 mm | 1.1/2-2.1/2“ | messing | brass |
| **KHNK-FW-1/4** | **HNXK-SF-1/4** | 6,4 mm | 1/4" | 38,1-63,5 mm | 1.1/2-2.1/2“ | kupfer | copper |
| **KHNK-FW-5/16** | **HNXK-SF-5/16** | 7,9 mm | 5/16“ | 38,1-63,5 mm | 1.1/2-2.1/2“ | schwarz | black |

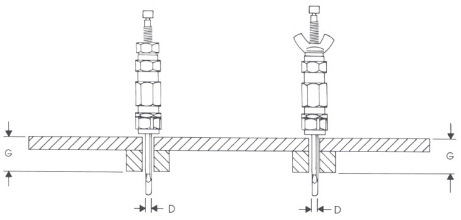


**PART NUMBER EXAMPLE:**
**K HN S – FW – 3/32**

- **Hole Size (D)**
- **FW – Free Wheeling**
- **Length S, L, EL, K (G)**
- **HN = Hex Nut, WN = Wing Nut**
- **Kwik-Lok**



**KNR2000**

## Pneumatic Installation & Removal Tool for Hex-Body Fasteners

**Features:**

- Lightweight, with a small nosepiece to allow easy accessibility where fasteners are close together
- Fingertip reverse switch
- 35 in. lb. maximum torque providing clamping force up to 360 lbs.



**Schraubheftnadeln, mit Flügelmutter**
FASTENERS, WING NUT TYPE

| **Art.Nr.**/PART NO. | | **Durchmesser** (D) | DIAMETER (D) | **Spannber.** (G) | GRIP (G) | **Farbe** | COLOR |
|---|---|---|---|---|---|---|---|
| **WING NUT PART NO.** | **CROSS REF. EQUIVALENT** | | | | | | |
| **KWN-FW-3/32** | **WNX-3/32** | 2,4 mm | 3/32“ | 0-12,7 mm | 0-1/2“ | silber | silver |
| **KWN-FW-1/8** | **WNX-1/8** | 3,2 mm | 1/8“ | 0-12,7 mm | 0-1/2“ | kupfer | copper |
| **KWN-FW-5/32** | **WNX-5/32** | 4,0 mm | 5/32“ | 0-12,7 mm | 0-1/2“ | schwarz | black |
| **KWN-FW-3/16** | **WNX-3/16** | 4,8 mm | 3/16“ | 0-12,7 mm | 0-1/2“ | messing | brass |
| **KWN-FW-7/32** | **WNX-7/32** | 5,6 mm | 7/32“ | 0-12,7 mm | 0-1/2“ | silber | silver |
| **KWN-FW-1/4** | **WNX-1/4** | 6,4 mm | 1/4“ | 0-12,7 mm | 0-1/2“ | kupfer | copper |
| **KWN-FW-5/16** | **WNX-5/16** | 7,9 mm | 5/16“ | 0-12,7 mm | 0-1/2“ | schwarz | black |
| | | | | | | | |
| **KWNL-FW-3/32** | **WNXL-3/32** | 2,4 mm | 3/32“ | 0-25,4 mm | 0-1“ | silber | silver |
| **KWNL-FW-1/8** | **WNXL-1/8** | 3,2 mm | 1/8“ | 0-25,4 mm | 0-1“ | kupfer | copper |
| **KWNL-FW-5/32** | **WNXL-5/32** | 4,0 mm | 5/32“ | 0-25,4 mm | 0-1“ | schwarz | black |
| **KWNL-FW-3/16** | **WNXL-3/16** | 4,8 mm | 3/16“ | 0-25,4 mm | 0-1“ | messing | brass |
| **KWNL-FW-7/32** | **WNXL-7/32** | 5,6 mm | 7/32“ | 0-25,4 mm | 0-1“ | silber | silver |
| **KWNL-FW-1/4** | **WNXL-1/4** | 6,4 mm | 1/4" | 0-25,4 mm | 0-1“ | kupfer | copper |
| **KWNL-FW-5/16** | **WNXL-5/16** | 7,9 mm | 5/16“ | 0-25,4 mm | 0-1“ | schwarz | black |
| | | | | | | | |
| **KWNEL-FW-3/32** | **WNXEL-3/32** | 2,4 mm | 3/32“ | 12,7-38,1 mm | 1/2-1.1/2“ | silber | silver |
| **KWNEL-FW-1/8** | **WNXEL-1/8** | 3,2 mm | 1/8“ | 12,7-38,1 mm | 1/2-1.1/2“ | kupfer | copper |
| **KWNEL-FW-5/32** | **WNXEL-5/32** | 4,0 mm | 5/32“ | 12,7-38,1 mm | 1/2-1.1/2“ | schwarz | black |
| **KWNEL-FW-3/16** | **WNXEL-3/16** | 4,8 mm | 3/16“ | 12,7-38,1 mm | 1/2-1.1/2“ | messing | brass |
| **KWNEL-FW-1/4** | **WNXEL-1/4** | 6,4 mm | 1/4“ | 12,7-38,1 mm | 1/2-1.1/2“ | kupfer | copper |
| **KWNEL-FW-5/16** | **WNXEL-5/16** | 7,9 mm | 5/16“ | 12,7-38,1 mm | 1/2-1.1/2“ | schwarz | black |
| | | | | | | | |
| **KWNK-FW-1/8** | **WNXK-1/8** | 3,2 mm | 1/8“ | 38,1-63,5 mm | 1.1/2-2.1/2“ | kupfer | copper |
| **KWNK-FW-5/32** | **WNXK-5/32** | 4,0 mm | 5/32“ | 38,1-63,5 mm | 1.1/2-2.1/2“ | schwarz | black |
| **KWNK-FW-3/16** | **WNXK-3/16** | 4,8 mm | 3/16“ | 38,1-63,5 mm | 1.1/2-2.1/2“ | messing | brass |
| **KWNK-FW-1/4** | **WNXK-1/4** | 6,4 mm | 1/4" | 38,1-63,5 mm | 1.1/2-2.1/2“ | kupfer | copper |
| **KWNK-FW-5/16** | **WNXK-5/16** | 7,9 mm | 5/16“ | 38,1-63,5 mm | 1.1/2-2.1/2“ | schwarz | black |

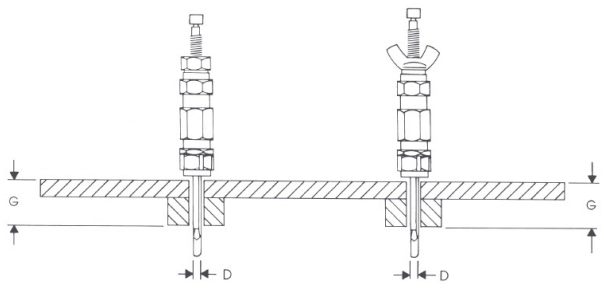


**PART NUMBER EXAMPLE:**
**K WN S – FW – 3/32**

- ***Hole Size***
- ***FW – Free Wheeling***
- ***Length S, L, EL, K***
- ***HN = Hex Nut, WN = Wing Nut***
- ***Kwik-Lok***



**Schraubheftnadel, Zylindrisch**
CYLINDRICAL BODY FASTENERS - **STANDARD**

| **Art.Nr.**/PART NO. | **DIAMETER** | **GRIP RANGE** | **BODY LENGTH** | | **COLOR** |
|---|---|---|---|---|---|
| | | | **OVERALL** (inches) | **INSTALLED** (inches) | |
| **CBX-BF-3/32** | 3/32” | 0-1/2“ | 4-1/32 | 3-23/64 | zinc |
| **CBX-BF-1/8** | 1/8” | 0-1/2“ | 4-1/16 | 3-23/64 | copper |
| **CBX-BF-5/32** | 5/32” | 0-1/2“ | 4-3/32 | 3-23/64 | black |
| **CBX-BF-3/16** | 3/16“ | 0-1/2“ | 4-1/8 | 3-23/64 | brass |
| **CBX-BF-7/32** | 7/32“ | 0-1/2“ | 4-9/64 | 3-23/64 | zinc |
| **CBX-BF-1/4** | 1/4" | 0-1/2“ | 4-5/32 | 3-23/64 | copper |
| **CBX-BF-9/32** | 9/32“ | 0-1/2“ | 4-5/32 | 3-23/64 | brass |
| **CBX-BF-5/16** | 5/16“ | 0-1/2“ | 4-5/32 | 3-23/64 | black |
| **CBX-BF-3/8** | 3/8“ | 0-1/2“ | 4-1/4 | 3-23/64 | black & brass cap |
| | | | | | |
| **CBXL-BF-3/32** | 3/32” | 0-1” | 5-1/32 | 4-23/64 | zinc |
| **CBXL-BF-1/8** | 1/8” | 0-1” | 5-1/16 | 4-23/64 | copper |
| **CBXL-BF-5/32** | 5/32” | 0-1” | 5-3/32 | 4-23/64 | black |
| **CBXL-BF-3/16** | 3/16“ | 0-1” | 5-1/8 | 4-23/64 | brass |
| **CBXL-BF-7/32** | 7/32“ | 0-1” | 5-9/64 | 4-23/64 | zinc |
| **CBXL-BF-1/4** | 1/4" | 0-1” | 5-5/32 | 4-23/64 | cooper |
| **CBXL-BF-9/32** | 9/32“ | 0-1” | 5-5/32 | 4-23/64 | brass |
| **CBXL-BF-5/16** | 5/16“ | 0-1” | 5-5/32 | 4-23/64 | black |
| **CBXL-BF-3/8** | 3/8“ | 0-1” | 5-1/4 | 4-23/64 | black & brass cap |
| | | | | | |
| **CBXEL-BF-3/32** | 3/32” | 1/2-1.1/2” | 5-17/32 | 4-23/64 | zinc |
| **CBXEL-BF-1/8** | 1/8” | 1/2-1.1/2” | 5-9/16 | 4-23/64 | copper |
| **CBXEL-BF-5/32** | 5/32” | 1/2-1.1/2” | 5-9/16 | 4-23/64 | black |
| **CBXEL-BF-3/16** | 3/16“ | 1/2-1.1/2” | 5-5/8 | 4-23/64 | brass |
| **CBXEL-BF-7/32** | 7/32“ | 1/2-1.1/2” | 5-41/64 | 4-23/64 | zinc |
| **CBXEL-BF-1/4** | 1/4" | 1/2-1.1/2” | 5-21/32 | 4-23/64 | copper |
| **CBXEL-BF-9/32** | 9/32“ | 1/2-1.1/2” | 5-21/32 | 4-23/64 | brass |
| **CBXEL-BF-5/16** | 5/16“ | 1/2-1.1/2” | 5-21/32 | 4-23/64 | black |
| **CBXEL-BF-3/8** | 3/8“ | 1/2-1.1/2” | 5-3/4 | 4-23/64 | black & brass cap |
| | | | | | |
| **CBXK-BF-1/8** | 1/8” | 1.1/2-2.1/2” | 6-9/16 | 4-23/64 | copper |
| **CBXK-BF-5/32** | 5/32” | 1.1/2-2.1/2” | 6-5/8 | 4-23/64 | black |
| **CBXK-BF-3/16** | 3/16“ | 1.1/2-2.1/2” | 6-5/8 | 4-23/64 | brass |
| **CBXK-BF-7/32** | 7/32“ | 1.1/2-2.1/2” | 6-41/64 | 4-23/64 | zinc |
| **CBXK-BF-1/4** | 1/4" | 1.1/2-2.1/2” | 6-21/32 | 4-23/64 | copper |
| **CBXK-BF-9/32** | 9/32“ | 1.1/2-2.1/2” | 6-21/32 | 4-23/64 | brass |
| **CBXK-BF-5/16** | 5/16“ | 1.1/2-2.1/2” | 6-21/32 | 4-23/64 | black |
| **CBXK-BF-3/8** | 3/8“ | 1.1/2-2.1/2” | 6-3/4 | 4-23/64 | black & brass cap |

## Installation & Removal Tools



**ATI800FG**

- torque 25 in/lbs
- Heavy Duty, Lightweight, and Compact
- Push button rapid reverse with lock position
- Quick to insert and remove cylindrical body fasteners
- Greater torque in reverse ensures removal of installed fasteners



**KCB2000-MK**

- max. torque 35 in/lbs (Adjustable 9-35 in/lbs)
- Heavy duty, yet light weight
- Reversible motor with finger tip control for switching to reverse
- Greater torque in reverse for those difficult removals



**Schraubheftnadel, Zylindrisch, mit Nachspannfeder**
CYLINDRICAL BODY FASTENERS – **SPRING LOADED**

| **Art.Nr.**/PART NO. | **DIAMETER** | **GRIP RANGE** | **BODY LENGTH** | | **COLOR** |
|---|---|---|---|---|---|
| | | | **OVERALL** (inches) | **INSTALLED** (inches) | |
| **CSX-BF-3/32** | 3/32" | 0-1/2" | 4-17/32 | 3-27/32 | zinc |
| **CSX-BF-1/8** | 1/8" | 0-1/2" | 4-9/16 | 3-27/32 | copper |
| **CSX-BF-5/32** | 5/32" | 0-1/2" | 4-19/32 | 3-27/32 | black |
| **CSX-BF-3/16** | 3/16" | 0-1/2" | 4-5/8 | 3-27/32 | brass |
| **CSX-BF-7/32** | 7/32" | 0-1/2" | 4-39/64 | 3-27/32 | zinc |
| **CSX-BF-1/4** | 1/4" | 0-1/2" | 4-21/32 | 3-27/32 | copper |
| **CSX-BF-9/32** | 9/32" | 0-1/2" | 4-21/32 | 3-27/32 | brass |
| **CSX-BF-5/16** | 5/16" | 0-1/2" | 4-21/32 | 3-27/32 | black |
| **CSX-BF-3/8** | 3/8" | 0-1/2" | 4-3/4 | 3-7/8 | black & brass cap |
| | | | | | |
| **CSXL-BF-3/32** | 3/32" | 1/2-1" | 5-1/32 | 3-27/32 | zinc |
| **CSXL-BF-1/8** | 1/8" | 1/2-1" | 5-1/16 | 3-27/32 | copper |
| **CSXL-BF-5/32** | 5/32" | 1/2-1" | 5-3/32 | 3-27/32 | black |
| **CSXL-BF-3/16** | 3/16" | 1/2-1" | 5-1/8 | 3-27/32 | brass |
| **CSXL-BF-7/32** | 7/32" | 1/2-1" | 5-7/64 | 3-27/32 | zinc |
| **CSXL-BF-1/4** | 1/4" | 1/2-1" | 5-5/32 | 3-27/32 | copper |
| **CSXL-BF-9/32** | 9/32" | 1/2-1" | 5-5/32 | 3-27/32 | brass |
| **CSXL-BF-5/16** | 5/16" | 1/2-1" | 5-5/32 | 3-27/32 | black |
| **CSXL-BF-3/8** | 3/8" | 1/2-1" | 5-1/4 | 3-7/8 | black & brass cap |
| | | | | | |
| **CSXEL-BF-3/32** | 3/32" | 1-1.1/2" | 5-17/32 | 3-27/32 | zinc |
| **CSXEL-BF-1/8** | 1/8" | 1-1.1/2" | 5-9/16 | 3-27/32 | copper |
| **CSXEL-BF-5/32** | 5/32" | 1-1.1/2" | 5-19/32 | 3-27/32 | black |
| **CSXEL-BF-3/16** | 3/16" | 1-1.1/2" | 5-5/8 | 3-27/32 | brass |
| **CSXEL-BF-7/32** | 7/32" | 1-1.1/2" | 5-39/64 | 3-27/32 | zinc |
| **CSXEL-BF-1/4** | 1/4" | 1-1.1/2" | 5-21/32 | 3-27/32 | copper |
| **CSXEL-BF-9/32** | 9/32" | 1-1.1/2" | 5-21/32 | 3-27/32 | brass |
| **CSXEL-BF-5/16** | 5/16" | 1-1.1/2" | 5-21/32 | 3-27/32 | black |
| **CSXEL-BF-3/8** | 3/8" | 1-1.1/2" | 5-3/4 | 3-7/8 | black & brass cap |
| | | | | | |
| **CSXK-BF-1/8** | 1/8" | 2-2.1/2" | 6-9/16 | 3-27/32 | copper |
| **CSXK-BF-5/32** | 5/32" | 2-2.1/2" | 6-5/8 | 3-27/32 | black |
| **CSXK-BF-3/16** | 5/32" | 2-2.1/2" | 6-5/8 | 3-27/32 | black |
| **CSXK-BF-7/32** | 7/32" | 2-2.1/2" | 6-41/64 | 3-27/32 | zinc |
| **CSXK-BF-1/4** | 1/4" | 2-2.1/2" | 6-21/32 | 3-27/32 | copper |
| **CSXK-BF-9/32** | 9/32" | 2-2.1/2" | 6-21/32 | 3-27/32 | brass |
| **CSXK-BF-5/16** | 5/16" | 2-2.1/2" | 6-21/32 | 3-27/32 | black |
| **CSXK-BF-3/8** | 3/8" | 2-2.1/2" | 6-3/4 | 3-7/8 | black & brass cap |

## Pneumatic Installation & Removal Tool



**W500-30-931GB**

**Features:**
- max. 3000 rpm
- max. torque 25 in/lbs
- incl. Guide Bushing
- incl. internal air flow control to adjust clamping force from 100 to 600 pounds.

## Manual Installation & Removal Tool



**CBHT-01**

**PART NUMBER EXAMPLE:**
**CBXEL-BF-1/8**

- ***DIAMETER (Fractional or metric)***
- ***"BIG FOOT" TYPE CLAMP***
- ***GRIP (X, XL, XEL, XK)***
- ***BASIC PART NO. (CB = Standard)***
  ***(CS = Spring Loaded)***

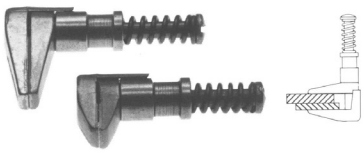

**Blechklemmen, zangenbetätigt (verwenden Sie Zange TP-74)**
SIDE GRIPS, PLIER OPERATED EDGE CLAMPS (USE PLIER P/N TP-74)

| **Art.Nr**./PART NO. | **Materialstärke** | MATERIAL THICKNESS | **Klemmtiefe** | JAW DEPTH | **Farbe** | COLOR |
|---|---|---|---|---|---|---|
| **KSG 1/2" x 1/2"** | 0-12,7 mm | 1/2“ | 0-12,7 mm | 0-1/2" | kupfer | copper |
| **KSG 3/4" x 1/2"** | 0-19,0 mm | 3/4" | 0-12,7 mm | 0-1/2" | messing | brass |
| **KSG 1/2" x 1"** | 0-12,7 mm | 1/2“ | 0-25,4 mm | 0-1" | kupfer | copper |
| **KSG 3/4" x 1"** | 0-19,0 mm | 3/4" | 0-25,4 mm | 0-1" | messing | brass |

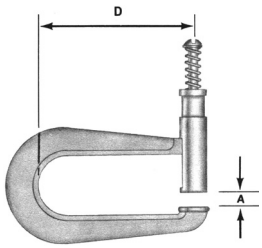


**Blechklemmen, zangenbetätigt (verwenden Sie Zange TP-74)**
SIDE GRIPS, PLIER OPERATED EDGE CLAMPS (USE PLIER P/N TP-74)

| **Art.Nr**./PART NO. | Material of Clamp | **Materialstärke** | MATERIAL THICKNESS | **Klemmtiefe** | JAW DEPTH |
|---|---|---|---|---|---|
| **542** | Aluminum | 0 - 9,5 mm | 0" - 3/8" | max. 50 mm | 2" |
| **543** | Aluminum | 6,35 - 14,3 mm | 1/4" - 9/16" | max. 75 mm | 3" |
| **542S** | Steel | 0 - 9,5 mm | 0" - 3/8" | max. 50 mm | 2" |
| **543S** | Steel | 6,35 - 14,3 mm | 1/4" - 9/16" | max. 75 mm | 3" |

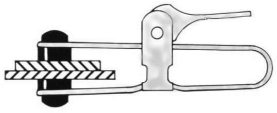

**Blechklemmen, handbetätigt**
HANDI-KLAMPS, HAND OPERATED

| **Art.Nr**./PART NO. | **Materialstärke** | MATERIAL THICKNESS | **Klemmtiefe** | JAW DEPTH |
|---|---|---|---|---|
| **K-1** | 0-7,94 mm | 0-5/16" | 25,4 mm | 1" |
| **K-2** | 0-7,94 mm | 0-5/16" | 38,1 mm | 1.1/2" |

# Kniehebelspanner / TOGGLE PLIERS

## *KNU-VISE*

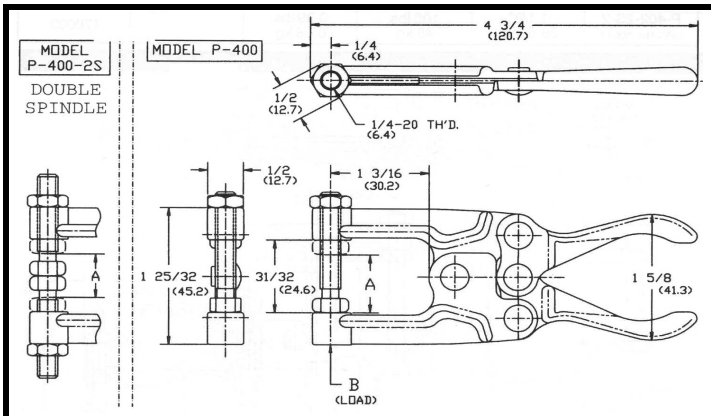


**P-400-2S** = **2 Spindeln, ohne Gummipuffer** / 2 Spindles without Rubber Pads

**P-400-2S-1** = **2 Spindeln, mit 1 Gummipuffer** / 2 Spindles with 1 Rubber Pad

**P-400-2S-2** = **2 Spindeln, mit 2 Gummipuffer** / 2 Spindles with 2 Rubber Pads

| Typ-Nr. MODEL | (A) Max. Materialstärke MAX. CLAMP THICK. (A) | Maximaldruck LOAD | Gewicht WEIGHT |
|---|---|---|---|
| **P-400** | 23/32" (18 mm) | 400 Lbs (180 kg) | 0.30 lbs. (0.14 kg) |
| **P-400-2S** | 19/32" (15 mm) | 400 Lbs (180 kg) | 0.30 lbs. (0.14 kg) |
| **P-400-1** | 9/16" (14 mm) | 400 Lbs (180 kg) | 0.30 lbs. (0.14 kg) |
| **P-400-2S-1** | 7/16" (11 mm) | 100 lbs. (45 kg) | 0.30 lbs. (0.14 kg) |
| **P-400-2** | 5/16" (8 mm) | 100 lbs. (45 kg) | 0.30 lbs. (0.14 kg) |
| **P-400-2S-2** | 3/16" (4,8 mm) | 100 lbs. (45 kg) | 0.30 lbs. (0.14 kg) |

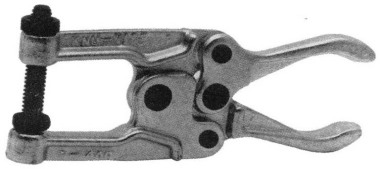

**1 Spindel, ohne Gummipuffer** / 1 Spindle without Rubber Pad

**P-400**



**1 Spindel, mit Gummipuffer** / 1 Spindle with Rubber Pad

**P-400-1**



**1 Spindel, mit 2 Gummipuffer** / 1 Spindle with 2 Rubber Pads

**P-400-2**

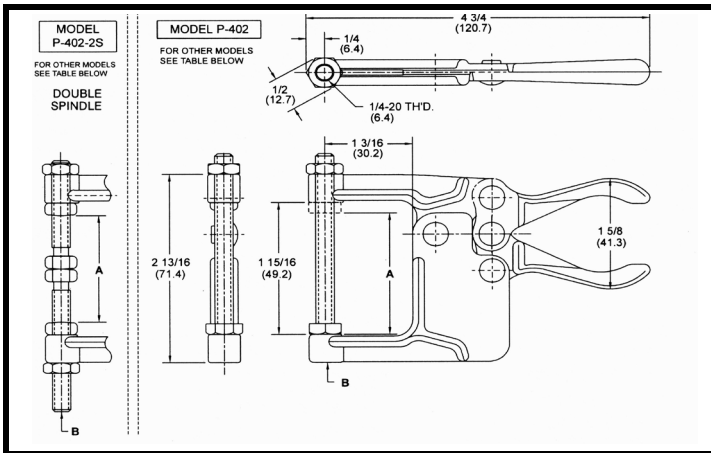


**P-402-1** = **1 Spindel, mit 1 Gummipuffer** / 1 Spindles with 1 Rubber Pad

**P-402-2S** = **2 Spindeln, ohne Gummipuffer** / 2 Spindles without Rubber Pads

**P-402-2S-2** = **2 Spindeln, mit 2 Gummipuffer** / 2 Spindles with 2 Rubber Pads

| Typ-Nr. MODEL | (A) Max. Materialstärke MAX. CLAMP THICK. (A) | Maximaldruck LOAD | Gewicht WEIGHT |
|---|---|---|---|
| **P-402** | 1.3/4" (45.5 mm) | 400 Lbs (180 kg) | 0.36 lbs. (0.16 kg) |
| **P-402-1** | 1.1/2" (38.1 mm) | 100 lbs. (45 kg) | 0.36 lbs. (0.16 kg) |
| **P-402-2S** | 1.1/2" (38.1 mm) | 400 Lbs (180 kg) | 0.38 lbs. (0.17 kg) |
| **P-402-2S-2** | 1.1/8" (28.6 mm) | 100 lbs. (45 kg) | 0.39 lbs. (0.18 kg) |

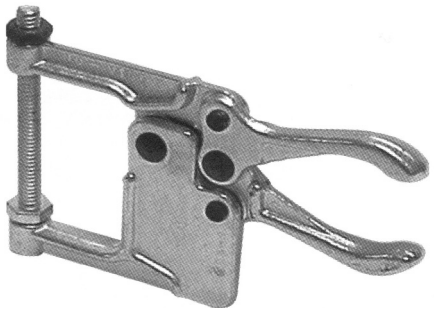

**1 Spindel, ohne Gummipuffer** / 1 Spindle without Rubber Pad

**P-402**

# Kniehebelspanner / TOGGLE PLIERS

## *KNU-VISE*

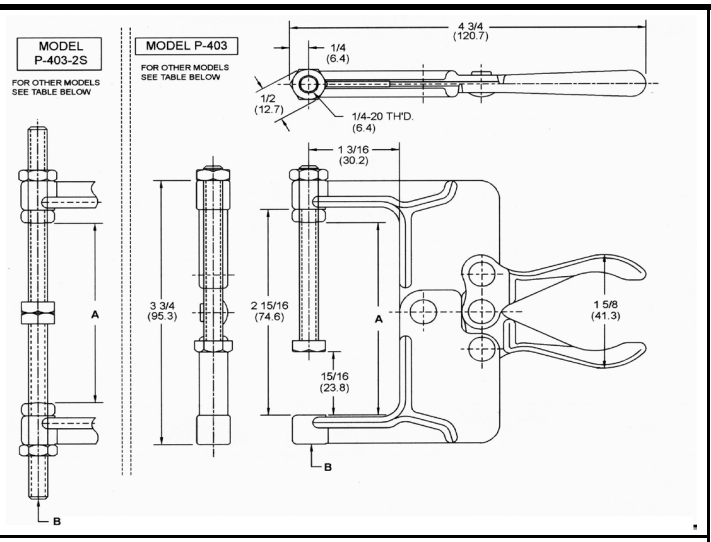


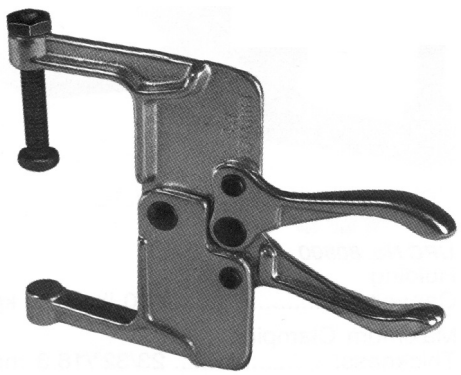

**P-403-1** = **1 Spindel, mit 1 Gummipuffer / 1 Spindles with 1 Rubber Pad**

**P-403-2S** = **2 Spindeln, ohne Gummipuffer / 2 Spindles without Rubber Pads**

**P-403-2S-2** = **2 Spindeln, mit 2 Gummipuffer** / 2 Spindles with 2 Rubber Pads

**1 Spindel, ohne Gummipuffer** / 1 Spindle without Rubber Pad

**P-403**

| **Typ-Nr.** MODEL | **(A) Max. Materialstärke** MAX. CLAMP THICK. (A) | **Maximaldruck** LOAD | **Gewicht** WEIGHT |
|---|---|---|---|
| **P-403** | 2.3/4" (69.9 mm) | 400 Lbs (180 kg) | 0.42 lbs. (0.19 kg) |
| **P-403-1** | 2.1/2" (63.5 mm) | 100 lbs. (45 kg) | 0.42 lbs. (0.19 kg) |
| **P-403-2S** | 2.5/8" (66.7 mm) | 400 Lbs (180 kg) | 0.44 lbs. (0.20 kg) |
| **P-403-2S-2** | 2.1/8" (54.0 mm) | 100 lbs. (45 kg) | 0.45 lbs. (0.20 kg) |

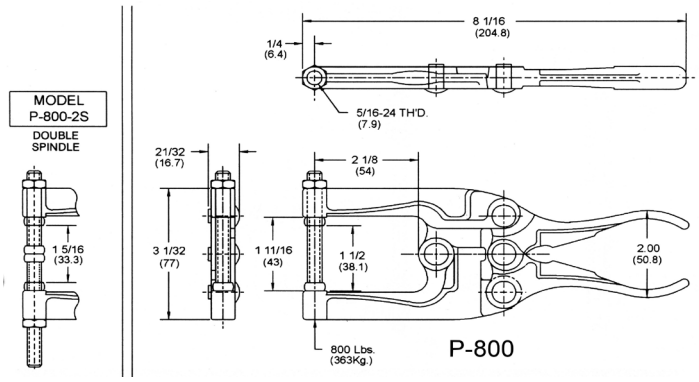




**P-800** = **1 Spindel, ohne Gummipuffer / 1 Spindle without Rubber Pad**

**P-800-2S** = **2 Spindeln, ohne Gummipuffer** / 2 Spindles without Rubber Pads

**P-800 ***

* Auch mit Schnelllösehebel lieferbar !

* Also available with Quick Release Lever !

Typ/Mod.: **LUP-800 & LUP-800-2S**

| **Typ-Nr.** MODEL | **(A) Max. Materialstärke** MAX. CLAMP THICK. (A) | **Maximaldruck** LOAD | **Gewicht** WEIGHT |
|---|---|---|---|
| **P-800** | 1.1/2" (38.1 mm) | 800 lbs. (362 kg) | 1.06 lbs. (0.48 kg) |
| **P-800-2S** | 1.5/16" (33.3 mm) | 800 lbs. (362 kg) | 1.06 lbs. (0.48 kg) |

# **Kniehebelspanner** / TOGGLE PLIERS

## *KNU-VISE*

P-803

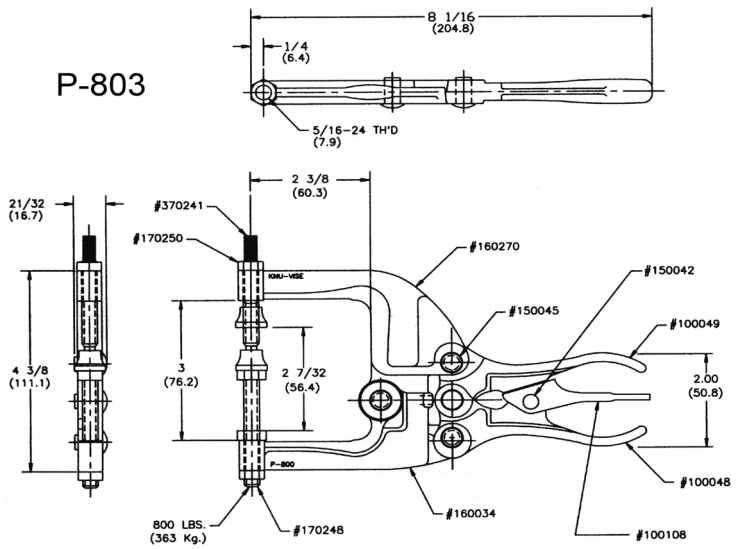


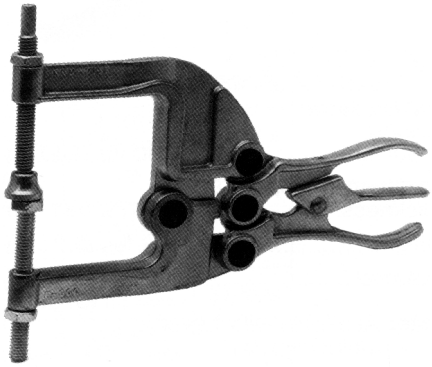

**P-803 ***

* Mit Schnelllösehebel und 1 Spindel mit Gelenkfuss

* Included Quick Release Lever and 1 Swivel Foot Spindle

| **Typ-Nr.**<br>MODEL | **(A) Max. Materialstärke**<br>MAX. CLAMP THICK. (A) | **Maximaldruck**<br>LOAD | **Gewicht**<br>WEIGHT |
|---|---|---|---|
| **P-803** | 2.7/32" (56.4 mm) | 700 lbs. (318 kg) | 1.28 lbs. (0.58 kg) |

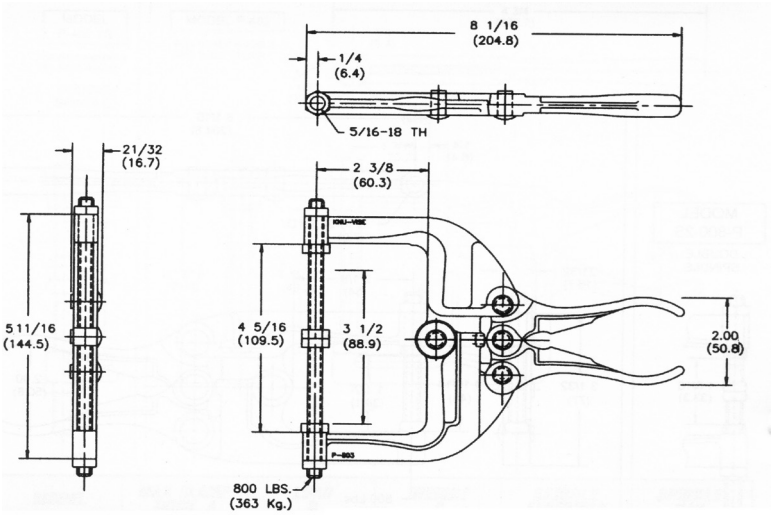


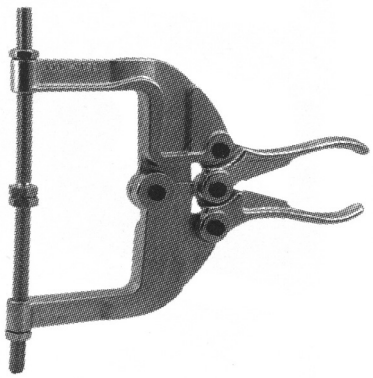

**P-804 ***
2 Spindeln, Sechskantkopf
2 Hex Head Spindles

* Auch mit Schnelllösehebel lieferbar !

* Also available with Quick Release Lever !

Typ/Mod.: **LUP-804**

| **Typ-Nr.**<br>MODEL | **(A) Max. Materialstärke**<br>MAX. CLAMP THICK. (A) | **Maximaldruck**<br>LOAD | **Gewicht**<br>WEIGHT |
|---|---|---|---|
| **P-804** | 3.1/2" (88.9 mm) | 600 lbs. (272 kg) | 1.36 lbs. (0.62 kg) |

# Kniehebelspanner / TOGGLE PLIERS

## *KNU-VISE*

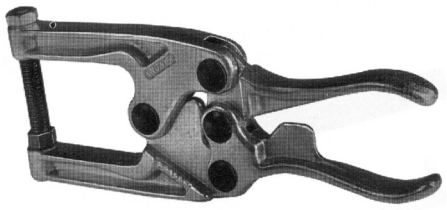

**P-1200**

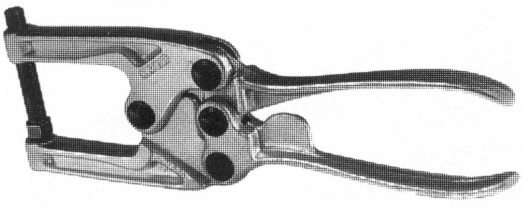

**P-1600**

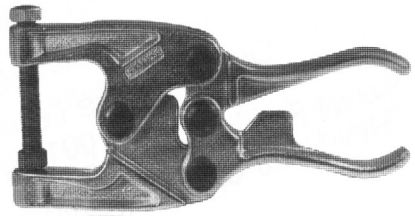

**P-1800**

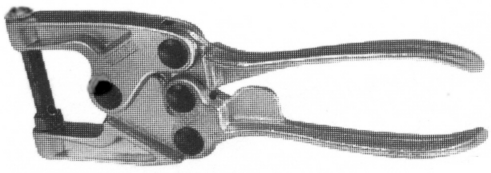

**P-2400**

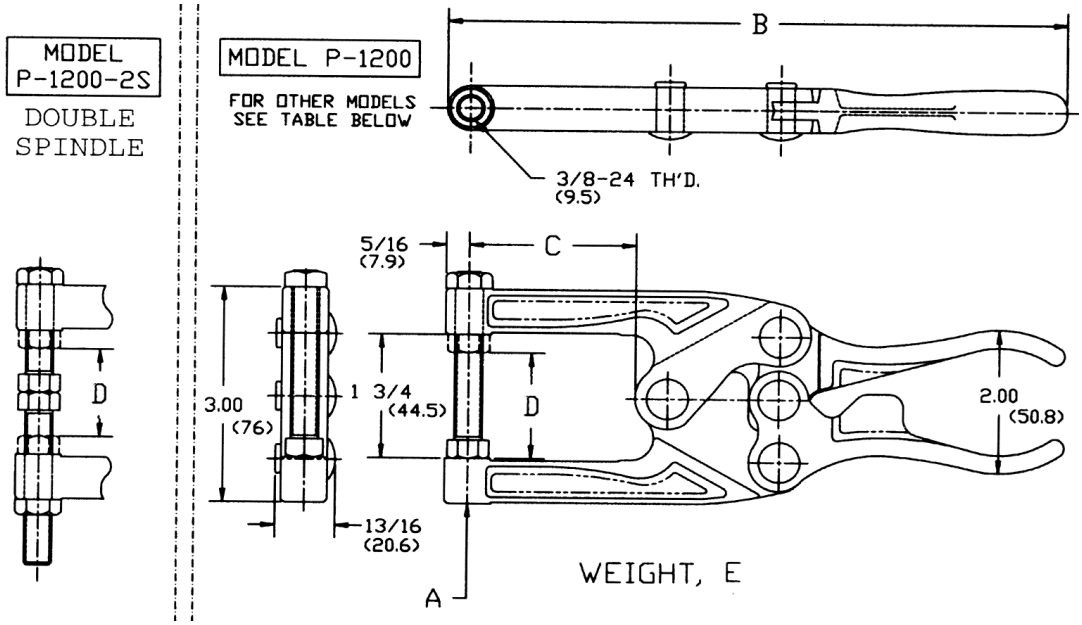


| Typ-Nr.<br>MODEL | A<br>Maximaldruck<br>LOAD | B<br>Länge<br>LENGTH | C<br>Max. Klemmtiefe<br>THROAT DEPTH | D<br>Max. Materialstärke<br>MAX. CLAMP THICK. | E<br>Gewicht<br>WEIGHT | Anzahl der Spindeln<br>NO OF SPINDLES |
|---|---|---|---|---|---|---|
| **P-1200** | 1200 lbs. (540 kg) | 8.3/8" (212.7 mm) | 2.1/4" (57.2 mm) | 1.7/32" (31.0 mm) | 1.56 lbs. (0.71 kg) | 1 |
| **P-1600** | 1600 lbs. (725 kg) | 9.3/4" (247.7 mm | 2.1/4" (57.2 mm) | 1.7/32" (31.0 mm) | 1.64 lbs. (0.74 kg) | 1 |
| **P-1800** | 1800 lbs. (820 kg) | 7.3/8" (187.3 mm) | 1.1/4" (31.8 mm) | 1.1/4" (31.8 mm) | 1.46 lbs. (0.66 kg) | 1 |
| **P-2400** | 2400 lbs. (1100 kg) | 8.3/4" (222.2 mm) | 1.1/4" (31.8 mm) | 1.1/4" (31.8 mm) | 1.54 lbs. (0.70 kg) | 1 |
| **P-1200-2S** | 1200 lbs. (540 kg) | 8.3/8" (212.7 mm) | 2.1/4" (57.2 mm) | 1.1/32" (26.2 mm) | 1.60 lbs. (0.73 kg) | 2 |
| **P-1600-2S** | 1600 lbs. (725 kg) | 9.3/4" (247.7 mm | 2.1/4" (57.2 mm) | 1.1/32" (26.2 mm) | 1.68 lbs. (0.76 kg) | 2 |
| **P-1800-2S** | 1800 lbs. (820 kg) | 7.3/8" (187.3 mm) | 1.1/4" (31.8 mm) | 1.1/16" (27.0 mm) | 1.50 lbs. (0.68 kg) | 2 |
| **P-2400-2S** | 2400 lbs. (1100 kg) | 8.3/4" (222.2 mm) | 1.1/4" (31.8 mm) | 1.1/16" (27.0 mm) | 1.58 lbs. (0.73 kg) | 2 |

# Kniehebelspanner / TOGGLE PLIERS *KNU-VISE*

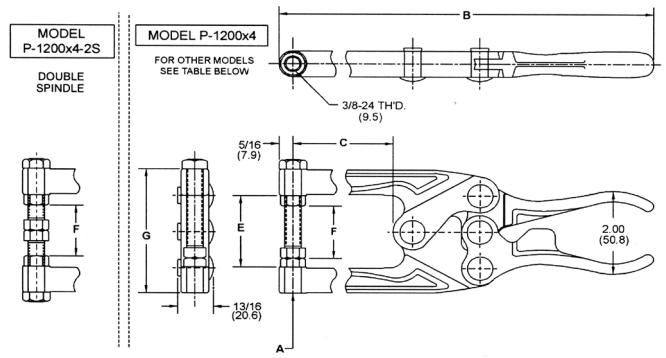





| Typ-Nr.<br>MODEL | A<br>Maximal-druck<br>LOAD | B<br>Länge<br>LENGTH | C<br>Klemmtiefe<br>THROAT DEPTH | D<br>Gewicht<br>WEIGHT | E<br>Öffnungs-weite<br>JAW OPENING | F<br>Max. Material-stärke<br>MAX. CLAMP THICK. | G<br>Höhe<br>HEIGHT | Min. Material-stärke<br>MIN CLAMP THICK. | Spindel-Nr.<br>SPINDLE NO. |
|---|---|---|---|---|---|---|---|---|---|
| **Einfach-Spindel** / SINGLE SPINDLE | | | | | | | | | |
| **P-1200x4** | 600 lbs.<br>270 kg | 10 7/16"<br>265 mm | 4"<br>101.6 mm | 2.01 lbs.<br>.91 kg | 1 3/4"<br>44.5 mm | 1 7/32"<br>31 mm | 3"<br>76 mm | 0<br>0 | 370009 |
| **P-1203x4** | 600 lbs.<br>270 kg | 10 7/16"<br>265 mm | 4"<br>101.6 mm | 2.31 lbs.<br>1.05 kg | 3 17/32"<br>89.7 mm | 2 13/16"<br>71.4 mm | 5"<br>127 mm | 1 19/32"<br>40.5 mm | 370009 |
| **P-1204x4** | 600 lbs.<br>270 kg | 10 7/16"<br>265 mm | 4"<br>101.6 mm | 2.41 lbs.<br>11.09 kg | 4 17/32"<br>115 mm | 3 13/16"<br>96.8 mm | 6"<br>152.4 mm | 3 19/32"<br>91.3 mm | 370009 |
| **P-1206x4** | 600 lbs.<br>270 kg | 10 7/16"<br>265 mm | 4"<br>101.6 mm | 2.60 lbs.<br>1.18 kg | 6 17/32"<br>166 mm | 5 13/16"<br>147.6 mm | 8"<br>203.2 mm | 5 19/32"<br>142.1 mm | 370009 |
| **P-1200x6** | 400 lbs.<br>180 kg | 12 7/16"<br>316 mm | 6"<br>152.4 mm | 2.48 lbs.<br>1.13 kg | 1 3/4"<br>44.5 mm | 1 7/32"<br>31 mm | 3"<br>76 mm | 0<br>0 | 370009 |
| **P-1203x6** | 400 lbs.<br>180 kg | 12 7/16"<br>316 mm | 6"<br>152.4 mm | 2.78 lbs.<br>1.26 kg | 3 17/32"<br>89.7 mm | 2 13/16"<br>71.4 mm | 5"<br>127 mm | 1 19/32"<br>40.5 mm | 370009 |
| **P-1204x6** | 400 lbs.<br>180 kg | 12 7/16"<br>316 mm | 6"<br>152.4 mm | 2.88 lbs.<br>1.31 kg | 4 17/32"<br>115 mm | 3 13/16"<br>96.8 mm | 6"<br>152.4 mm | 3 19/32"<br>91.3 mm | 370009 |
| **P-1206x6** | 400 lbs.<br>180 kg | 12 7/16"<br>316 mm | 6"<br>152.4 mm | 3,07 lbs.<br>1.39kg | 6 17/32"<br>166 mm | 5 13/16"<br>147.6 mm | 8"<br>203.2 mm | 5 19/32"<br>142.1 mm | 370009 |
| **P-1200x8** | 300 lbs.<br>135 kg | 14 7/16"<br>367 mm | 8"<br>203.2 mm | 2.94 lbs.<br>1.33 kg | 1 3/4"<br>44.5 mm | 1 7/32"<br>31 mm | 3"<br>76 mm | 0<br>0 | 370009 |
| **P-1203x8** | 300 lbs.<br>135 kg | 14 7/16"<br>367 mm | 8"<br>203.2 mm | 3.24 lbs.<br>1.47 kg | 3 17/32"<br>89.7 mm | 2 13/16"<br>71.4 mm | 5"<br>127 mm | 1 19/32"<br>40.5 mm | 370009 |
| **P-1204x8** | 300 lbs.<br>135 kg | 14 7/16"<br>367 mm | 8"<br>203.2 mm | 3.34 lbs.<br>1.52 kg | 4 17/32"<br>115 mm | 3 13/16"<br>96.8 mm | 6"<br>152.4 mm | 3 19/32"<br>91.3 mm | 370009 |
| **P-1206x8** | 300 lbs.<br>135 kg | 14 7/16"<br>367 mm | 8"<br>203.2 mm | 3.53 lbs.<br>1.60 kg | 6 17/32"<br>166 mm | 5 13/16"<br>147.6 mm | 8"<br>203.2 mm | 5 19/32"<br>142.1 mm | 370009 |
| **Doppel Spindel** / DOUBLE SPINDLE | | | | | | | | | |
| **P-1200x4-2S** | 600 lbs.<br>270 kg | 10 7/16"<br>265 mm | 4"<br>101.6 mm | 2.05 LBS.<br>0.93 KG. | 1 3/4"<br>44.5 mm | | 3"<br>76 mm | | 370009 &<br>370051 |
| **P-1203x4-2S** | 600 lbs.<br>270 kg | 10 7/16"<br>265 mm | 4"<br>101.6 mm | 2.41 LBS.<br>1.09 KG. | 3 17/32"<br>89.7 mm | | 5"<br>127 mm | | 370009 &<br>370028 |
| **P-1204x4-2S** | 600 lbs.<br>270 kg | 10 7/16"<br>265 mm | 4"<br>101.6 mm | 2.65 LBS.<br>1.203 KG. | 4 17/32"<br>115 mm | | 6"<br>152.4 mm | | 370029 &<br>370052 |
| **P-1206x4-2S** | 600 lbs.<br>270 kg | 10 7/16"<br>265 mm | 4"<br>101.6 mm | 2.70 LBS.<br>1.19 KG. | 6 17/32"<br>166 mm | | 8"<br>203.2 mm | | 370028 &<br>370030 |
| **P-1200x6-2S** | 400 lbs.<br>180 kg | 12 7116"<br>316 mm | 6"<br>152.4 mm | 2.52 LBS.<br>1.4 KG. | 1 3/4"<br>44.5 mm | | 3"<br>76 mm | | 370009 &<br>370051 |
| **P-1203x6-2S** | 400 lbs.<br>180 kg | 12 7/16"<br>316 mm | 6"<br>152.4 mm | 2.88 LBS.<br>1.31 KG. | 3 17/32"<br>89.7 mm | | 5"<br>127 mm | | 370009 &<br>370028 |
| **P-1204x6-2S** | 400 lbs.<br>180 kg | 12 7/16"<br>316 mm | 6"<br>152.4 mm | 3.12 LBS.<br>1.42 KG. | 4 17/32"<br>115 mm | | 6"<br>152.4 mm | | 370029 &<br>370052 |
| **P-1206x6-2S** | 400 lbs.<br>180 kg | 12 7/16"<br>316 mm | 6"<br>152.4 mm | 3.17 LBS.<br>1.44 KG. | 6 17/32"<br>166 mm | | 8"<br>203.2 mm | | 370028 &<br>370030 |
| **P-1200x8-2S** | 300 lbs.<br>135 kg | 14 7/16"<br>367 mm | 8"<br>203.2 mm | 2.98 lbs.<br>1.35 kg | 1 3/4"<br>44.5 mm | | 3"<br>76 mm | | 370009 &<br>370051 |
| **P-1203x8-2S** | 300 lbs.<br>135 kg | 14 7/16"<br>367 mm | 8"<br>203.2 mm | 3.34 lbs.<br>1.52 kg | 3 17/32"<br>89.7 mm | | 5"<br>127 mm | | 370009 &<br>370028 |
| **P-1204x8-2S** | 300 lbs.<br>135 kg | 14 7/16"<br>367 mm | 8"<br>203.2 mm | 3.58 lbs.<br>1.63 kg | 4 17/32"<br>115 mm | | 6"<br>152.4 mm | | 370029 &<br>370052 |
| **P-1206x8-2S** | 300 lbs.<br>135 kg | 14 7/16"<br>367 mm | 8"<br>203.2 mm | 3.63 lbs.<br>1.65 kg | 6 17/32"<br>166 mm | | 8"<br>203.2 mm | | 370028 &<br>370030 |
| **Einfach-Spindel, volle Länge /** FULL LENGTH SINGLE SPINDLE | | | | | | | | | |
| **P-1203x4-L** | 600 lbs.<br>270 kg | 10 7/16"<br>265 mm | 4"<br>101.6 mm | 2.35 lbs.<br>1.07 kg | 3 17/32"<br>89.7 mm | | 5"<br>127 mm | 0<br>0 | 370028 |
| **P-1204x4-L** | 600 lbs.<br>270 kg | 10 7/16"<br>265 mm | 4"<br>101.6 mm | 2.48 lbs.<br>1.13 kg | 4 17/32"<br>115 mm | | 6"<br>152.4 mm | 0<br>0 | 370029 |
| **P-1206x4-L** | 600 lbs.<br>270 kg | 10 7/16"<br>265 mm | 4"<br>101.6 mm | 2.72 lbs.<br>1.23 kg | 6 17/32"<br>166 mm | | 8"<br>203.2 mm | 0<br>0 | 370030 |
| **P-1203x6-L** | 400 lbs.<br>180 kg | 12 7/16"<br>316 mm | 6"<br>152.4 mm | 2.92 lbs.<br>1.33 kg | 3 17/32"<br>89.7 mm | | 5"<br>127 mm | 0<br>0 | 370028 |
| **P-1204x6-L** | 400 lbs.<br>180 kg | 12 7/16"<br>316 mm | 6"<br>152.4 mm | 2.95 lbs.<br>1.34 kg | 4 17/32"<br>115 mm | | 6"<br>152.4 mm | 0<br>0 | 370029 |
| **P-1206x6-L** | 400 lbs.<br>180 kg | 12 7/16"<br>316 mm | 6"<br>152.4 mm | 3.19 lbs.<br>1.45 kg | 6 17/32"<br>166 mm | | 8"<br>203.2 mm | 0<br>0 | 370030 |
| **P-1203x8-L** | 300 lbs.<br>135 kg | 14 7/16"<br>367 mm | 8"<br>203.2 mm | 3.28 lbs.<br>1.49 kg | 3 17/32"<br>89.7 mm | | 5"<br>127 mm | 0<br>0 | 370028 |
| **P-1204x8-L** | 300 lbs.<br>135 kg | 14 7/16"<br>367 mm | 8"<br>203.2 mm | 3.41 lbs.<br>1.55 kg | 4 17/32"<br>115 mm | | 6"<br>152.4 mm | 0<br>0 | 370029 |
| **P-1206x8-L** | 300 lbs.<br>135 kg | 14 7/16"<br>367 mm | 8"<br>203.2 mm | 3.65 lbs.<br>1.66 kg | 6 17/32"<br>166 mm | | 8"<br>203.2 mm | 0<br>0 | 370030 |

# Kniehebelspanner / TOGGLE PLIERS

## *KNU-VISE*

### FGP-400

**Mit Druckfeder**

| | |
|---|---|
| Gewicht | 0,14 kg |
| Federkraft | 4,5-20 kg |
| Inklusive | Federspindel |

**Spring Loaded**

| | |
|---|---|
| Weight | 0.31 lbs. |
| Spring Load | 10-45 lbs. |
| Included | Spring Assembly |

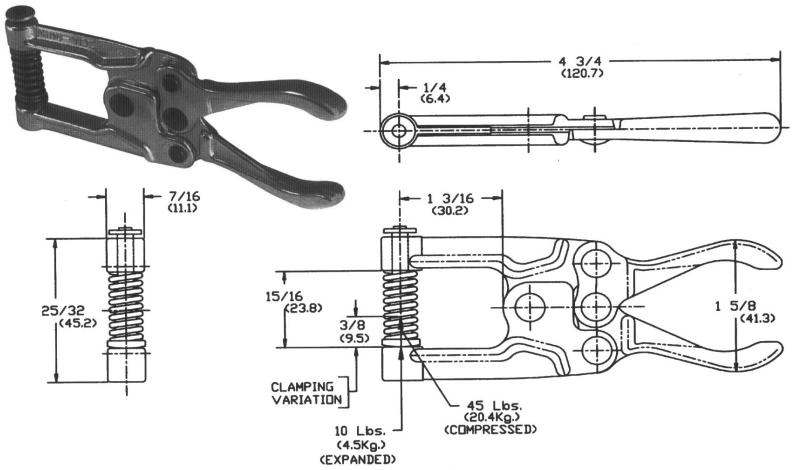


### FGP-1200

**Mit Druckfeder**

| | |
|---|---|
| Gewicht | 0,73 kg |
| Federkraft | 30-57 kg |
| Inklusive | Federspindel |

**Spring Loaded**

| | |
|---|---|
| Weight | 1,60 lbs. |
| Spring Load | 65-125 lbs. |
| Included | Spring Assembly |

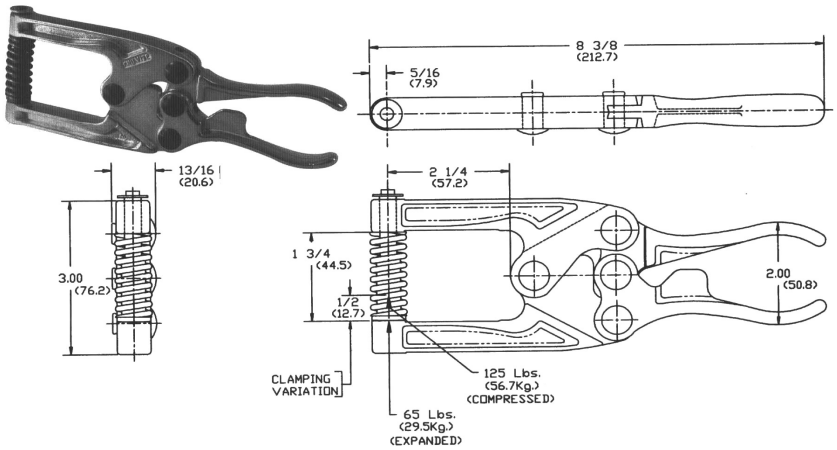


### HLP-400

**Mit Führungszapfen**

| | |
|---|---|
| Gewicht | 0,15 kg |
| Spannkraft | 180 kg |

**Hole Location**

| | |
|---|---|
| Weight | 1,60 lbs. |
| Holding Cap. | 65-125 lbs. |

Bitte angeben: Zapfen & Lochdurchmesser
Please specify: Pilot & Hole Size

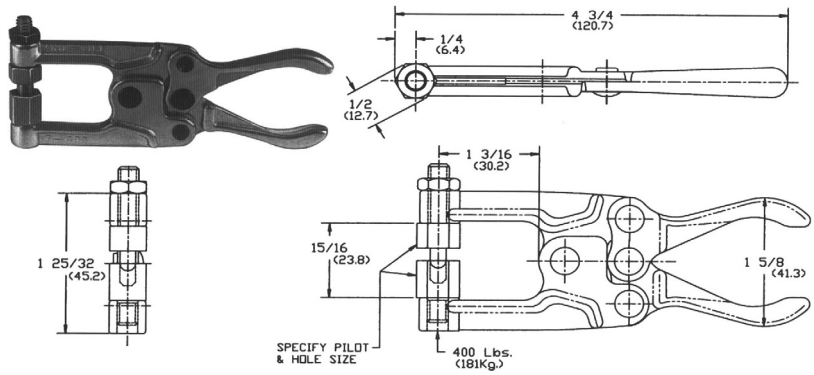


### HLP-1200

**Mit Führungszapfen**

| | |
|---|---|
| Gewicht | 0,78 kg |
| Spannkraft | 540 kg |

**Hole Location**

| | |
|---|---|
| Weight | 1,72 lbs. |
| Holding Cap. | 1200 lbs. |

Bitte angeben: Zapfen & Lochdurchmesser
Please specify: Pilot & Hole Size

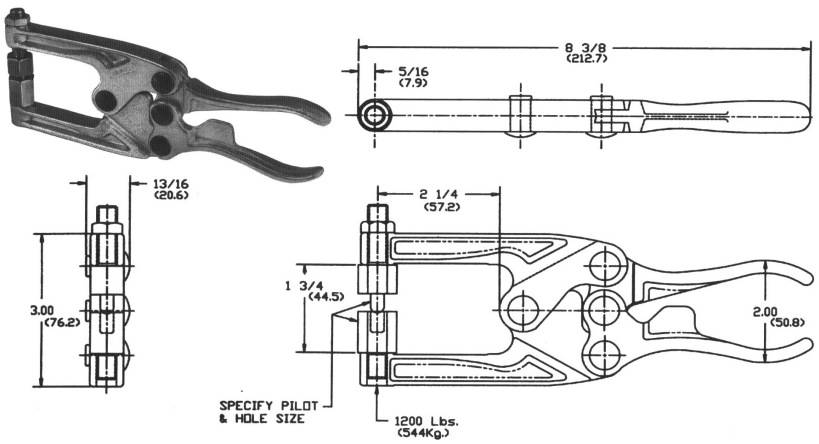

## Kniehebel-Spanner / TOGGLE-PLIERS

*Destaco*

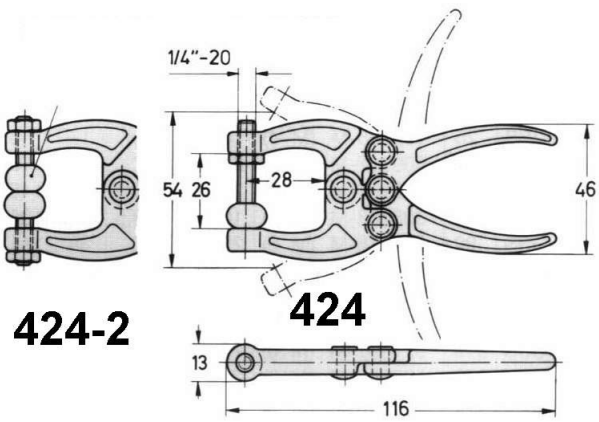


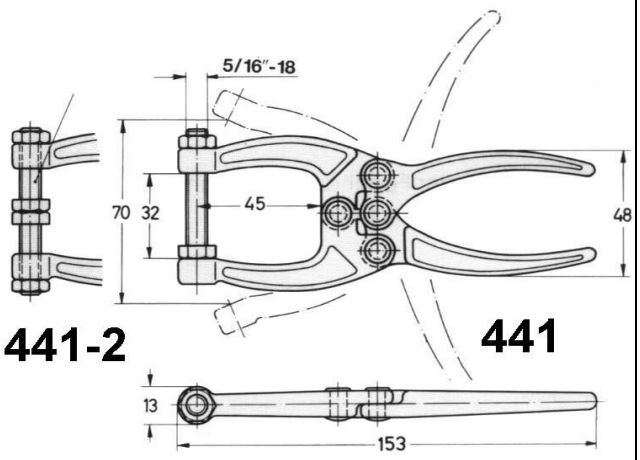


| Art.Nr. Part No. | Beschreibung | Description | Haltekraft / Holding Pressure | Gewicht / Weight |
|---|---|---|---|---|
| **424** | 1 Spindel | 1 Spindle | 90 daN | 0,20 kg / 0,44 lbs. |
| **424-2** | 2 Spindeln | 2 Spindles | 90 daN | 0,20 kg / 0,44 lbs. |
| | | | | |
| **441** | 1 Spindel | 1 Spindle | 150 daN | 0,25 kg / 0,55 lbs. |
| **441-2** | 2 Spindeln | 2 Spindles | 150 daN | 0,25 kg / 0,55 lbs. |

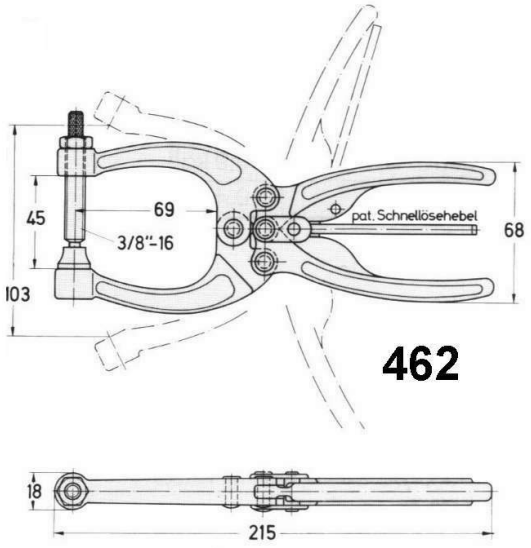


| Art.Nr. Part No. | Beschreibung | Description | Haltekraft Holding Pressure | Gewicht / Weight |
|---|---|---|---|---|
| **462** | 1 Spindel mit Gelenkfuß | 1 Spindle with Swivel Foot | 320 daN | 0,60 kg / 1,33 lbs. |

# **Spannelemente** / Toggle Clamps and Clamping Devices

## KNU-VISE
## DESTACO
## GOOD HAND

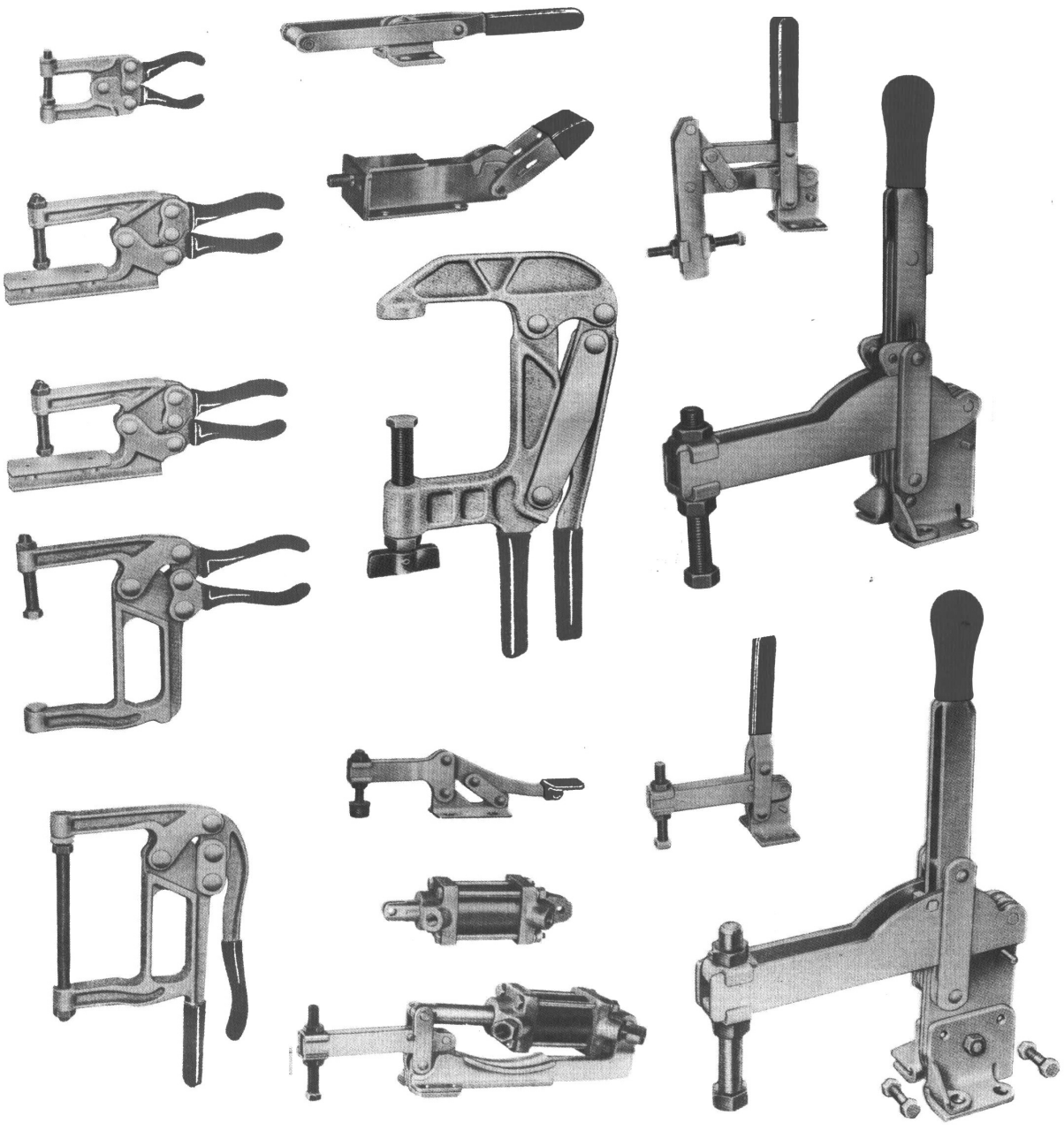

**Andere Typen und Abmessungen können auf Anfrage angeboten werden**

Other types and dimensions are available on request

# Stationäre Niet- und Dimpel-Maschinen
## Stationary Riveting & Dimpling Machines

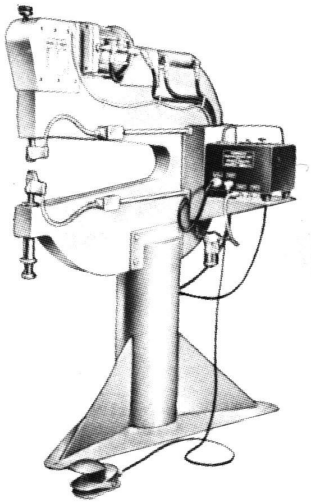

**AT 256SS**
STATIONARY DIMPLING MACHINE

**AT 257JAF**
TERMO DIMPLE GUN
USED WITH AT 249P

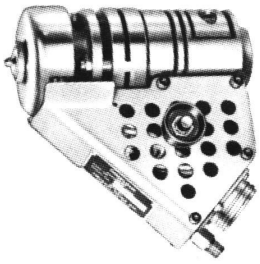

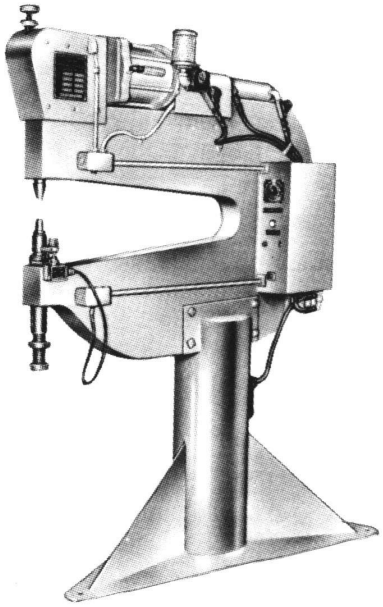

STATIONARY RIVETING MACHINE

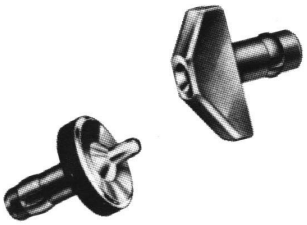

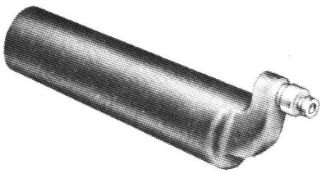

**AT 244 LB DOLLY BAR**

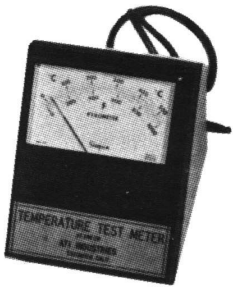


AT 246TM TEST METER




**AT 249P**
THERMOMATIC DIMPLING CONTROL UNIT
WITH SOLID STATE
TEMPERATURE CONTROLS

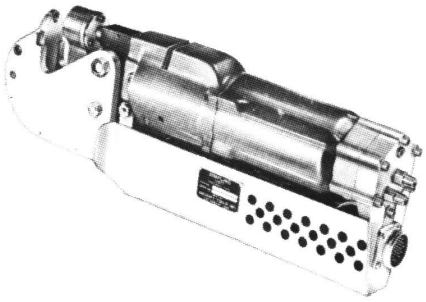

**AT 259 SERIES**
PORTABLE HOT DIMPLING SQUEEZER
USED WITH AT 249P

Weitere Informationen erhalten Sie auf Anfrage
More Information on request



**Mod. 100B**



**Mod. 400**

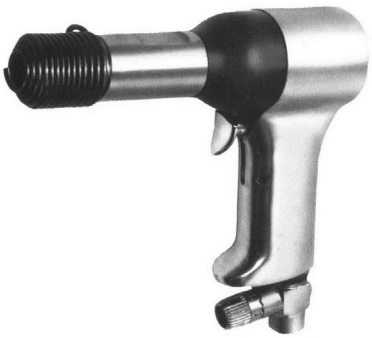

**Mod. 3X**

**Niethämmer, für Döpper mit kurzem Schaft 10,2 x 12,7**
RIVET HAMMERS, FOR RIVET SETS WITH SHORT SHANK .401 X .50 INCH

| Art.Nr./Part No. | Max. Nietleistung / Rated Rivet Capacity | | | | Länge / Length | | Gewicht / Weight | |
|---|---|---|---|---|---|---|---|---|
| | Stahl | Aluminium | Steel | Aluminum | mm | Inches | Kg. | Lbs. |
| **100-B** | 3,2 mm | 3,2 mm | 1/8" | 1/8" | 95 | 3.3/4" | 1,0 | 2.1/4 |
| **200-B** | 4,0 mm | 4,8 mm | 5/32" | 3/16" | 108 | 4.1/4" | 1,2 | 2.5/8 |

**Niethämmer, für Döpper mit Schaft 10,2 x 30 / 40,3 mm (Parker Taper)**
RIVET HAMMERS, FOR RIVET SETS WITH **PARKER TAPER** SHANK .401 X 1.164 / 1.11/16"

| Art.Nr./Part No. | Max. Nietleistung / Rated Rivet Capacity | | | | Länge / Length | | Gewicht / Weight | |
|---|---|---|---|---|---|---|---|---|
| | Stahl | Aluminium | Steel | Aluminum | mm | Inches | Kg. | Lbs. |
| **200** | 4,0 mm | 4,8 mm | 5/32" | 3/16" | 136 | 5.3/8" | 1,4 | 3.1/8 |
| **300** | 4,8 mm | 6,4 mm | 3/16" | 1/4" | 168 | 6.5/8" | 1,6 | 3.1/2 |
| **400** | 6,4 mm | 9,5 mm | 1/4" | 3/8" | 191 | 7.1/2" | 1,65 | 3.5/8 |

**Niethämmer, für Döpper mit Schaft 12,6 x 30 / 40,3 mm (Parker Taper)**
RIVET HAMMERS, FOR RIVET SETS WITH **PARKER TAPER** SHANK .498 X 1.164 / 1.11/16"

| Art.Nr./Part No. | Max. Nietleistung / Rated Rivet Capacity | | | | Länge / Length | | Gewicht / Weight | |
|---|---|---|---|---|---|---|---|---|
| | Stahl | Aluminium | Steel | Aluminum | mm | Inches | Kg. | Lbs. |
| **600** | 8,0 mm | 9,5 mm | 5/16" | 3/8" | 241 | 9.1/2" | 3,3 | 7.1/4 |
| **800** | 9,5 mm | 11,1 mm | 3/8" | 7/16" | 305 | 12" | 3,9 | 8.3/4 |

**Niethämmer, für Döpper mit Schaft 10,2 x 30 / 40,3 mm (Parker Taper)**
RIVET HAMMERS, FOR RIVET SETS WITH **PARKER TAPER** SHANK .401 X 1.164 / 1.11/16"

| Art.Nr./Part No. | Max. Nietleistung / Rated Rivet Capacity | | | | Länge / Length | | Gewicht / Weight | |
|---|---|---|---|---|---|---|---|---|
| | Stahl | Aluminium | Steel | Aluminum | mm | Inches | Kg. | Lbs. |
| **2-X** | 2,4 mm | 3,2 mm | 3/32" | 1/8" | 170 | 6.11/16" | 1,0 | 2.1/4 |
| **3-X** | 4,0 mm | 4,8 mm | 5/32" | 3/16" | 189 | 7.5/16" | 1,50 | 2.5/16 |
| **4-X** | 4,8 mm | 6,4 mm | 3/16" | 1/4" | 211 | 8.5/16" | 1,25 | 2.3/4 |



**114C-3**

**Schnellwechsel-Rückholfeder**
Quick Change Retainer Spring



**115A + 115B**

**Rückholfeder**
Retainer Spring Beehive Type



**J-985**

**Schnellwechsel-Rückholfeder**
Quick Change Retainer Spring

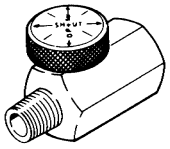

**J-109B**

**Luft-Regulierventil**
Air Regulator

| Empfohlen für: recommend for Mod.: | 100B 200B | 200 300/400 | 600 800 | 2X 3X/4X |
|---|---|---|---|---|
| **114C-3** | X | X | | X |
| **115A** | | X | | X |
| **115B** | | | X | |
| **J-985** | X | | | |
| **J-109B / TP2012** | X | X | X | X |



**TP2012**
Luftregulierventil
Brass Air Tool Regulator



**LSRR-400**



**590-RGK**

| **Rückstoßarme Niethämmer, für Döpper mit Schaft 10,2 x 30 / 40,3 mm (Parker Taper)**<br>RECOILLESS RIVET HAMMERS, FOR RIVET SETS WITH **PARKER TAPER** SHANK .401 X 1.164 / 1.11/16" | | | | | | | | |
|---|---|---|---|---|---|---|---|---|
| **Art.Nr./Part No.** | **Max. Nietleistung / Rated Rivet Capacity** | | | | **Länge / Length** | | **Gewicht / Weight** | |
| | **Stahl** | **Aluminium** | **Steel** | **Aluminum** | mm | Inches | Kg. | Lbs. |
| **LSRR-200A** | 4,0 mm | 4,8 mm | 5/32" | 3/16" | 192 | 7.9/16" | 1,3 | 2.8 |
| **LSRR-300A** | 4,8 mm | 6,4 mm | 3/16" | 1/4" | 211 | 8.5/16" | 1,35 | 3.0 |
| **LSRR-400A** | 6,4 mm | 9,5 mm | 1/4"" | 3/8" | 216 | 8.1/2" | 1,40 | 3.1 |

| **Rückstoßarmer Niethammer, für Döpper mit Schaft 12,6 x 30 / 40,3 mm (Parker Taper)**<br>RECOILLESS RIVET HAMMER, FOR RIVET SETS WITH **PARKER TAPER** SHANK .498 X 1.164 / 1.11/16" | | | | | | | | |
|---|---|---|---|---|---|---|---|---|
| **Art.Nr./Part No.** | **Max. Nietleistung / Rated Rivet Capacity** | | | | **Länge / Length** | | **Gewicht / Weight** | |
| | **Stahl** | **Aluminium** | **Steel** | **Aluminum** | mm | Inches | Kg. | Lbs. |
| **LSRR-600A** | 8,0 mm | 9,5 mm | 5/16" | 3/8" | 266 | 10.1/2" | 1,7 | 3.7 |
| **LSRR-800A** | 9,5 mm | 11,1 mm | 3/8" | 7/16" | 330 | 13" | 3,2 | 7.0 |

**Niethammer-Sortiment, wahlweise mit Niethammer 3-X oder 4-X, im Kunstoffkoffer**

RIVET GUN KIT WITH RIVET HAMMER 3-X OR 4-X (PLEASE SPECIFY) WITH MOLDED RUBBER-CASE

## Inhalt / Contents

## 590-RGK

| **Menge/Qty.** | **Beschreibung** | **Description** | **Artikel-Nummer / Part-Number** |
|---|---|---|---|
| 1 | Niethammer | Rivethammer | 3X oder/or 4X (Bitte angeben / please specify) |
| 1 | Luft-Regulator | Air-Regulator | TP-97 |
| 1 | Rückholfeder | Retainer Spring | 114C-3 |
| 1 | Rückholfeder | Retainer Spring | 115A |
| 1 | Öl für Niethammer | Air Tool Oil | A1142 |
| 1 | Gegenhalteeisen | Bucking Bar | 638 |
| 1 | Gegenhalteeisen | Bucking Bar | 647 |
| 1 | Gegenhalteeisen | Bucking Bar | 670 |
| 1 | Gegenhalteeisen | Bucking Bar | 681 |
| 1 | Döpper, gerade | Straight Rivet Set | 100A3-3/32" (AN470) |
| 1 | Döpper, gerade | Straight Rivet Set | 100A3-1/8" (AN470) |
| 1 | Döpper, gerade | Straight Rivet Set | 100A3-5/32" (AN470) |
| 1 | Döpper, gerade | Straight Rivet Set | 100A3-3/16" (AN470) |
| 1 | Döpper, gebogen 10° | Offset Rivet Set 10° | 101A3-3/32" (AN470) |
| 1 | Döpper, gebogen 10° | Offset Rivet Set 10° | 101A3-1/8" (AN470) |
| 1 | Döpper, gebogen 10° | Offset Rivet Set 10° | 101A3-5/32" (AN470) |
| 1 | Döpper, gebogen 10° | Offset Rivet Set 10° | 101A3-3/16" (AN470) |
| 1 | Döpper, flach | Flush Rivet Set | 101AF-3A |
| 1 | Döpper, flach | Flush Rivet Set | 110CB |
| 1 | Döpper, flach | Flush Rivet Set | 107A-2 |

## Döpper mit Kalotte, Standard-Schaft 10,2 x 30/40,3 mm, für AN470/ NASM20470

CUPPED RIVET SETS, PARKER TAPER SHANK .401 X 1.164/1.11/16", FOR AN470 / NASM20470

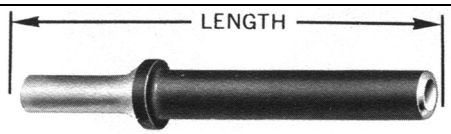


### Döpper, gerade Ausführung
RIVET SET, STRAIGHT-TYPE

| Gesamtlänge Length | Nietgröße 2,4 mm Rivet Size 3/32" | Nietgröße 3,2 mm Rivet Size 1/8" | Nietgröße 4,0 mm Rivet Size 5/32" | Nietgröße 4,8 mm Rivet Size 3/16" | Nietgröße 6,4 mm Rivet Size 1/4" |
|---|---|---|---|---|---|
| **mm / Inch** | **Art.Nr. / Part No.** | **Art.Nr. / Part No.** | **Art.Nr. / Part No.** | **Art.Nr. / Part No.** | **Art.Nr. / Part No.** |
| 64 / **2.1/2"** | **100A2-3/32"** | **100A2-1/8"** | **100A2-5/32"** | **100A2-3/16"** | **100A2-1/4"** |
| 89 / **3.1/2"** | **100A3-3/32"** | **100A3-1/8"** | **100A3-5/32"** | **100A3-3/16"** | **100A3-1/4"** |
| 140 / **5.1/2"** | **100A5-3/32"** | **100A5-1/8"** | **100A5-5/32"** | **100A5-3/16"** | **100A5-1/4"** |
| 191 / **7.1/2"** | **100A7-3/32"** | **100A7-1/8"** | **100A7-5/32"** | **100A7-3/16"** | **100A7-1/4"** |
| 267 / **10.1/2"** | **100A8-3/32"** | **100A8-1/8"** | **100A8-5/32"** | **100A8-3/16"** | **100A8-1/4"** |
| 343 / **13.1/2"** | **100A9-3/32"** | **100A9-1/8"** | **100A9-5/32"** | **100A9-3/16"** | **100A9-1/4"** |



### Döpper, 10° gebogen
RIVET SET, OFFSET-TYPE 10°

| Gesamtlänge Length | Nietgröße 2,4 mm Rivet Size 3/32" | Nietgröße 3,2 mm Rivet Size 1/8" | Nietgröße 4,0 mm Rivet Size 5/32" | Nietgröße 4,8 mm Rivet Size 3/16" | Nietgröße 6,4 mm Rivet Size 1/4" |
|---|---|---|---|---|---|
| **mm / Inch** | **Art.Nr. / Part No.** | **Art.Nr. / Part No.** | **Art.Nr. / Part No.** | **Art.Nr. / Part No.** | **Art.Nr. / Part No.** |
| 89 / **3.1/2"** | **101A3-3/32"** | **101A3-1/8"** | **101A3-5/32"** | **101A3-3/16"** | **101A3-1/4"** |
| 140 / **5.1/2"** | **101A5-3/32"** | **101A5-1/8"** | **101A5-5/32"** | **101A5-3/16"** | **101A5-1/4"** |
| 191 / **7.1/2"** | **101A7-3/32"** | **101A7-1/8"** | **101A7-5/32"** | **101A7-3/16"** | **101A7-1/4"** |
| 267 / **10.1/2"** | **101A8-3/32"** | **101A8-1/8"** | **101A8-5/32"** | **101A8-3/16"** | **101A8-1/4"** |
| 343 / **13.1/2"** | **101A9-3/32"** | **101A9-1/8"** | **101A9-5/32"** | **101A9-3/16"** | **101A9-1/4"** |

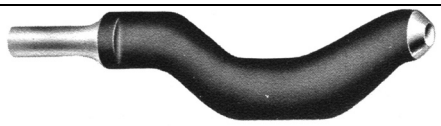

### Döpper, durchgebogen
RIVET SET, GOOSENECK-TYPE

| Gesamtlänge Length | Nietgröße 2,4 mm Rivet Size 3/32" | Nietgröße 3,2 mm Rivet Size 1/8" | Nietgröße 4,0 mm Rivet Size 5/32" | Nietgröße 4,8 mm Rivet Size 3/16" | Nietgröße 6,4 mm Rivet Size 1/4" |
|---|---|---|---|---|---|
| **mm / Inch** | **Art.Nr. / Part No.** | **Art.Nr. / Part No.** | **Art.Nr. / Part No.** | **Art.Nr. / Part No.** | **Art.Nr. / Part No.** |
| 168 / **6.5/8"** | **104A-3/32"** | **104A-1/8"** | **104A-5/32"** | **104A-3/16"** | **104A-1/4"** |




### Döpper, doppelt gebogen
RIVET SET, DOUBLE OFFSET-TYPE

| Gesamtlänge Length | Nietgröße 2,4 mm Rivet Size 3/32" | Nietgröße 3,2 mm Rivet Size 1/8" | Nietgröße 4,0 mm Rivet Size 5/32" | Nietgröße 4,8 mm Rivet Size 3/16" | Nietgröße 6,4 mm Rivet Size 1/4" |
|---|---|---|---|---|---|
| **mm / Inch** | **Art.Nr. / Part No.** | **Art.Nr. / Part No.** | **Art.Nr. / Part No.** | **Art.Nr. / Part No.** | **Art.Nr. / Part No.** |
| 146 / **5.3/4"** | **105A-3/32"** | **105A-1/8"** | **105A-5/32"** | **105A-3/16"** | **105A-1/4"** |

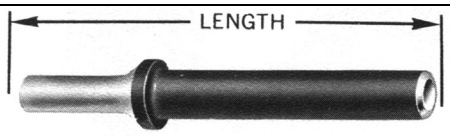


### Döpper, gerade Ausführung, für modifiziertem Universal Rundkopf / RIVET SET, STRAIGHT, CUPPED, MODIFIED UNIVERSAL HEAD
***BOEING* BACR15FT TYPE**

| Gesamtlänge Length | Nietgröße 3,2 mm Rivet Size 1/8" | Nietgröße 4,0 mm Rivet Size 5/32" | Nietgröße 4,8 mm Rivet Size 3/16" | Nietgröße 5,6 mm Rivet Size 7/32" | Nietgröße 6,4 mm Rivet Size 1/4" |
|---|---|---|---|---|---|
| **mm / Inch** | **Art.Nr. / Part No.** | **Art.Nr. / Part No.** | **Art.Nr. / Part No.** | **Art.Nr. / Part No.** | **Art.Nr. / Part No.** |
| 89 / **3.1/2"** | **100A3-1/8"FT** | **100A3-5/32"FT** | **100A3-3/16"FT** | **100A3-7/32"FT** | **100A3-1/4"FT** |

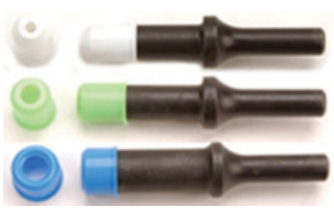

## Snap-Soc

Protects rivets and sheet metal from scuffing/marring (smileys), reducing incidence of stress fractures, re-work and visible blemishes.

| Art.Nr. Part No. | Nietgröße Rivet Size | Farbe Color |
|---|---|---|
| **1003** | 3/32" (2.4mm) | WHITE |
| **1004** | 1/8" (3.2mm) | RED |
| **1005** | 5/32" (4.0mm) | GREEN |
| **1006** | 3/16" (4.8mm) | YELLOW |
| **1008** | 1/4" (6.4mm) | BLUE |

# Flach-Döpper, Standard-Schaft 10,2 x 30/40,3 mm

FLUSH RIVET SETS, PARKER TAPER SHANK .401 X 1.164/1.11/16"

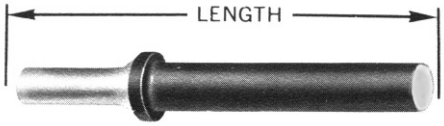


**Gerade Ausführung, Durchmesser 12,7 mm**
STRAIGHT-TYPE, BODY DIAMETER 1/2"

| Art.Nr. / Part No. | Länge mm / Length Inch |
|---|---|
| **100AF-2A** | 64 / **2.1/2"** |
| **100AF-3A** | 89 / **3.1/2"** |
| **100AF-5A** | 140 / **5.1/2"** |
| **100AF-7A** | 191 / **7.1/2"** |
| **100AF-8A** | 267 / **10.1/2"** |



**10° gebogen, Durchmesser 12,7 mm**
10° OFFSET-TYPE, BODY DIAMETER 1/2"

| Art.Nr. / Part No. | Länge mm / Length Inch |
|---|---|
| **----** | ---- |
| **101AF-3A** | 89 / **3.1/2"** |
| **101AF-5A** | 140 / **5.1/2"** |
| **101AF-7A** | 191 / **7.1/2"** |
| **101AF-8A** | 267 / **10.1/2"** |

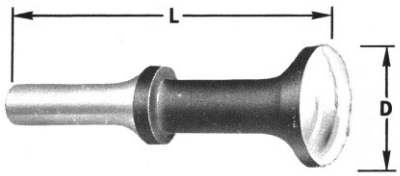


**Flachdöpper , gerade, mit poliertem Kopf**
FLUSH-SET,STRAIGHT,WITH POLISHED FACE

| Art. Nr. Part No. | Länge mm Length Inch | Durchmesser Face Diameter |
|---|---|---|
| **107A-1** | 70 / **2.3/4"** | 25,4 / **1"** |
| **107A-2** | 70 / **2.3/4"** | 31,8 / **1.1/4"** |
| **107A-3** | 89 / **3.1/2"** | 31,8 / **1.1/4"** |
| **107A-4** | 140 / **5.1/2"** | 25,4 / **1"** |

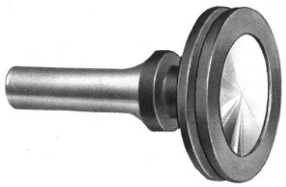

**Flachdöpper , gerade, mit Gummiring**
FLUSH-SET, STRAIGHT, WITH RUBBER GUARD

| Art. Nr. Part No. | Länge mm Length Inch | Durchmesser Face Diameter |
|---|---|---|
| **110CA** | 63,5 / **2.1/2"** | 19,1 / **3/4"** |
| **110CB** | 63,5 / **2.1/2"** | 25,4 / **1"** |
| **110CC** | 63,5 / **2.1/2"** | 31,8 / **1.1/4"** |




**Gelenk-Döpper mit Gummihülle**
FLUSH-SET, SWIVEL-TYPE WITH RUBBER SLEEVE

| Art. Nr. Part No. | Länge Length | Durchmesser Face Diameter |
|---|---|---|
| **106A** | 83 mm **3.1/4"** | 31,8 mm **1.1/4"** |

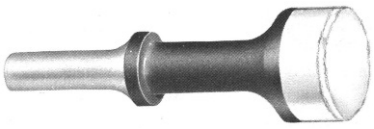

**Flachdöpper mit Aluminiumkopf**
FLUSH-SET, STRAIGHT, WITH ALUMIUM-HEAD

| Art. Nr. Part No. | Länge Length | Durchmesser Face Diameter |
|---|---|---|
| **107A-2D** | 80 mm **3.5/32"** | 25,4 mm **1"** |



**Flachdöpper,Pilzform, mit Nylon-Ring**
FLUSH RIVET SET, MUSHROOM TYPE WITH NYLON SLEEVE

| Art. Nr. Part No. | Länge Length | Durchmesser Face Diameter |
|---|---|---|
| **ST1111B-V401K-3** | 61 mm **2.4"** | 32 mm **1.1/4"** |

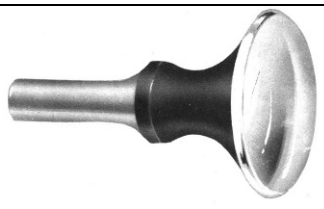

**Flachdöpper, Pilzform**
FLUSH RIVET SET, MUSHROOM TYPE

| Art. Nr. Part No. | Länge Length | Durchmesser Face Diameter |
|---|---|---|
| **112A** | 76 mm **3"** | 48 mm **1.7/8"** |

# Flach-Döpper, Standard-Schaft 10,2 x 30/40,3 mm
FLUSH RIVET SETS, PARKER TAPER SHANK .401 X 1.164/1.11/16"

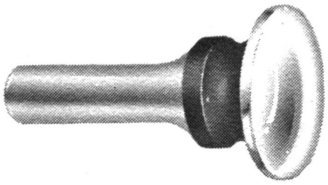

**Flachdöpper, kurze Ausführung**
FLUSH-RIVET-SET, STUBBY-TYPE

| **Art. Nr.** Part No. | **Länge mm** Length Inch | **Durchmesser** Face Diameter |
|---|---|---|
| **119A-1B** | 54 / **2.1/8"** | 19,1 / **3/4"** |
| **119A-2B** | 54 / **2.1/8"** | 25,4 / **1"** |
| **119A-3B** | 54 / **2.1/8"** | 28,6 / **1.1/8"** |
| **119A-4B** | 54 / **2.1/8"** | 31,8 / **1.1/4"** |

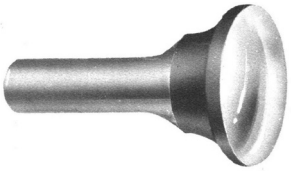

**Flachdöpper, Extra-Kurz, mit poliertem Kopf**
FLUSH-RIVET-SET, EXTRA-SHORT, WITH POLISHED FACE

| **Art. Nr.** Part No. | **Länge mm** Length Inch | **Durchmesser** Face Diameter |
|---|---|---|
| **113A-1** | 43,0 / **1.11/16"** | 19,1 / **3/4"** |
| **113A-2** | 46,0 / **1.13/16"** | 25,4 / **1"** |
| **113A-3** | 46,0 / **1.13/16** | 31,8 / **1.1/4"** |

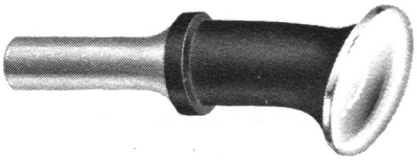

**Flachdöpper, 10° gebogen**
FLUSH-RIVET-SET, 10° OFFSET-TYPE

| **Art. Nr.** / Part No. | **Länge mm** / Length Inch | **Durchmesser** / Face Diameter |
|---|---|---|
| **121A-3** | 89 / **3.1/2"** | 31,8 / **1.1/4"** |
| **121A-4** | 140 / **5.1/2"** | 25,4 / **1"** |
| **121A-5** | 140 / **5.1/2"** | 31,8 / **1.1/4"** |
| **121A-6** | 191 / **7.1/2"** | 25,4 / **1"** |
| **121A-7** | 191 / **7.1/2"** | 31,8 / **1.1/4"** |

# Döpper für Niethämmer / RIVET SETS FOR RIVET-HAMMERS
## Mod. 100B & 200B
## Schaftabmessung / Shank dimension: 10,2 x 12,7 mm / .401 x 1/2"

| **Flachdöpper** Flush Rivet Sets | **Art. Nr.** Part No. | **Länge mm** Length Inch | **Durchmesser** Face Diameter |
|---|---|---|---|
| 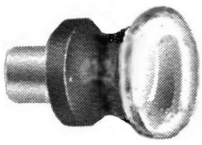 | **STJ-100** | **30,2 mm** **1.3/16"** | **25,4 mm** **1"** |
| 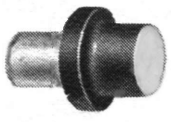 | **JAT100AF-1A** | **24 mm** **15/16"** | **12,7 mm** **1/2"** |

| **Mit Kalotte für AN470/NASM20470** Cupped Type for AN470/NASM20470 | **Art. Nr.** Part No. | **Länge mm** Length Inch | **Nietgröße** Rivet Size |
|---|---|---|---|
| 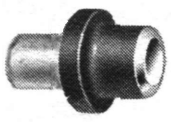 | **JAT100A-1-3/32"** **JAT100A-1-1/8"** **JAT100A-1-5/32"** **JAT100A-1-3/16"** | **25,4 mm** **1"** | 2,4 mm / **3/32"** 3,2 mm / **1/8"** 4,0 mm / **5/32"** 4,8 mm / **3/16"** |

# **Döpper für Niethämmer /** RIVET SETS FOR RIVET-HAMMERS
## ATLAS-COPCO Mod. RRN11P02

**Schaftabmessung /** Shank dimension: **10,2 x 17,0 mm / .401 x .669**
**Länge ohne Schaft /** Length without shank: **25 mm / 1"**

| **Flachdöpper /** Flush Rivet Sets | **Art. Nr.** / Part No. | **Durchmesser /** Face Diameter |
|---|---|---|
|  | **DAN 5014E-H-3/4" x 25 mm**<br>**DAN 5014E-H-1.1/8" x 25 mm** | **19,1 mm / 3/4"**<br>**28,2 mm / 1.1/8"** |
| | | |
| **Mit Kalotte für:/** Cupped Type for: **AN470 / NASM20470 / LN9198** | **Art. Nr.** / Part No. | **Nietgröße /** Rivet Size |
| 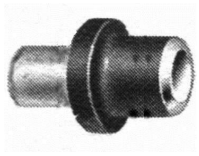 | **DAN 5014A-H-2,4 x 25**<br>**DAN 5014A-H-3,2 x 25**<br>**DAN 5014A-H-4,0 x 25**<br>**DAN 5014A-H-4,8 x 25** | 2,4 mm / **3/32"**<br>3,2 mm / **1/8"**<br>4,0 mm / **5/32"**<br>4,8 mm / **3/16"** |

## **DÖPPER FÜR HI-SHEAR NIETE, STANDARD-SCHAFT 10,2 X 30/40,3 MM**
DRIVE SETS FOR HI-SHEAR RIVETS, PARKER TAPER SHANK .401 X 1.164/1.11/16"

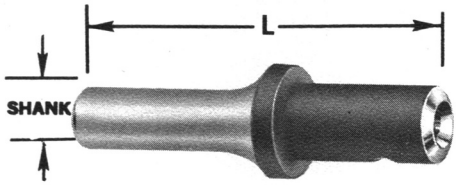


HI-SHEAR

**DÖPPER, GERADE AUSFÜHRUNG**
DRIVE SET, STRAIGHT-TYPE

| Gesamtlänge Length | Nietgröße 3,2 mm Rivet Size 1/8" | Nietgröße 4,0 mm Rivet Size 5/32" | Nietgröße 4,8 mm Rivet Size 3/16" | Nietgröße 6,4 mm Rivet Size 1/4" |
|---|---|---|---|---|
| mm / **Inch** | **Art.Nr. / Part No.** | **Art.Nr. / Part No.** | **Art.Nr. / Part No.** | **Art.Nr. / Part No.** |
| 89 / **3.1/2"** | **130A-3-1/8** | **130A-3-5/32** | **130A-3-3/16** | **130A-3-1/4** |
| 140 / **5.1/2"** | **130A-5-1/8** | **130A-5-5/32** | **130A-5-3/16** | **130A-5-1/4** |

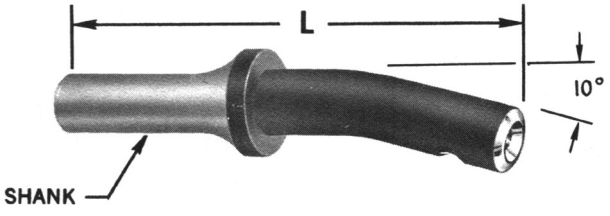


HI-SHEAR

**DÖPPER, 10° GEBOGEN**
DRIVE SET, OFFSET-TYPE 10°

| Gesamtlänge Length | Nietgröße 3,2 mm Rivet Size 1/8" | Nietgröße 4,0 mm Rivet Size 5/32" | Nietgröße 4,8 mm Rivet Size 3/16" | Nietgröße 6,4 mm Rivet Size 1/4" |
|---|---|---|---|---|
| mm / **Inch** | **Art.Nr. / Part No.** | **Art.Nr. / Part No.** | **Art.Nr. / Part No.** | **Art.Nr. / Part No.** |
| 89 / **3.1/2"** | **130A-3-1/8** | **130A-3-5/32** | **130A-3-3/16** | **130A-3-1/4** |



**LÄNGE CA. 108 MM, DORN CA. 64 MM**
LENGTH APPR. 4.1/4", PUNCH APPR. 2.1/2"

## Niet-Austreiber
KNOCK-OUT PUNCHES

| **Nietgröße** RIVET SIZE | **Schaft 10,2 x 30/40,3 mm** SHANK .401 X 1.164/1.11/16" **Art. Nr. / Part No.** | **Schaft 12,7 x 30/40,3 mm** SHANK .498 X 1.164/1.11/16" **Art. Nr. / Part No.** |
|---|---|---|
| **3/32"** | **140A-3** | |
| **1/8"** | **140A-4** | |
| **5/32"** | **140A-5** | |
| **3/16"** | **140A-6** | **140B-6** |
| **1/4"** | **140A-8** | **140B-8** |
| **5/16"** | **140A-10** | **140B-10** |
| **3/8"** | **140A-12** | **140B-12** |

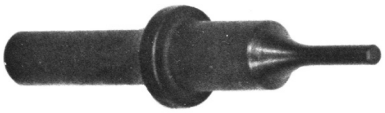

**LÄNGE CA. 89 MM, DORN CA. 13 MM**
LENGTH APPR. 3.1/2", PUNCH APPR. 1/2"

## Niet-Austreiber
KNOCK-OUT PUNCHES

| **Nietgröße** RIVET SIZE | **Schaft 10,2 x 30/40,3 mm** SHANK .401 X 1.164/1.11/16" **Art. Nr. / Part No.** | **Schaft 12,7 x 30/40,3 mm** SHANK .498 X 1.164/1.11/16" **Art. Nr. / Part No.** |
|---|---|---|
| **3/32"** | **141A3-3/32"** | |
| **1/8"** | **141A3-1/8"** | |
| **5/32"** | **141A3-5/32"** | |
| **3/16"** | **141A3-3/16"** | **141B3-3/16"** |
| **1/4"** | **141A3-1/4"** | **141B3-1/4"** |
| **5/16"** | **141A3-5/16"** | **141B3-5/16"** |
| **3/8"** | **141A3-3/8"** | **141B3-3/8"** |



Art. Nr. / Part No.: **1206-6**

## Flachmeißel für Niethammer
FLAT CHISEL GUN SET

| **SCHAFT 10,2 X 30/40,3 MM** SHANK .401 X 1.164/1.11/16" | **Gesamtlänge 171 MM** OVERALL-LENGTH 6.3/4" |
|---|---|

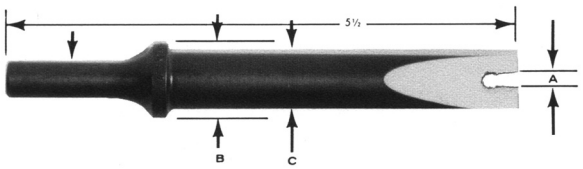


## Collar-Meißel für LOCKBOLTS
GUN-TYPE CHISEL FOR LOCKBOLTS

| **Art. Nr. Part No.** | **Gesamtlänge** Over-All-Length | **Nietgröße** Rivet Size | **A** +0,03 / -0,00 mm +.001 / -.000 Inch | **B** | **C** |
|---|---|---|---|---|---|
| **2165-2** | 140 mm / **5.1/2"** | 4,0 mm / **5/32"** | 3,96 mm / **.156** | 19,05 mm / **3/4"** | 12,7 mm / **1/2"** |
| **2165-3** | 140 mm / **5.1/2"** | 4,8 mm / **3/16"** | 4,75 mm / **.187** | 19,05 mm / **3/4"** | 15,9 mm / **5/8"** |
| **2165-4** | 140 mm / **5.1/2"** | 6,4 mm / **1/4"** | 6,35 mm / **.250** | 19,05 mm / **3/4"** | 15,9 mm / **5/8"** |
| **2165-5** | 140 mm / **5.1/2"** | 7,9 mm / **5/16"** | 7,92 mm / **.312** | 19,05 mm / **3/4"** | 15,9 mm / **5/8"** |
| **2165-6** | 140 mm / **5.1/2"** | 9,5 mm / **3/8"** | 9,53 mm / **.375** | 22,23 mm / **7/8"** | 19,1 mm / **3/4"** |

# Wolfram Gegenhalter / TUNGSTEN BUCKING BARS

Bucking bars made of tungsten provide increased weight (density) to allow riveting in confined areas. The weight to size ratio provides good kinetic energy transfer and will expedite the installation process. We offer a standard shapes and a consistent weight that should allow up to 3/16 diameter fastener installation. We can quote special contours upon request.

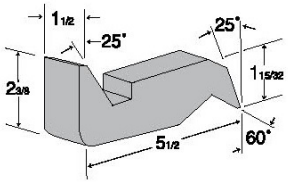


**TP1111T** 7.03 lbs.

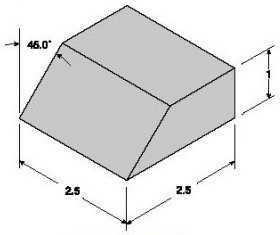


**TP51T** 3.50 lbs.

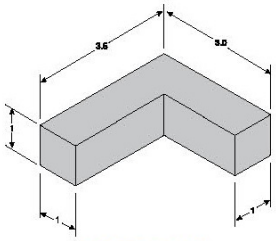


**TP52T** 3.80 lbs.

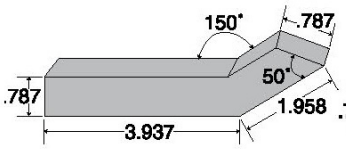


**TP54T** 2.20 lbs.

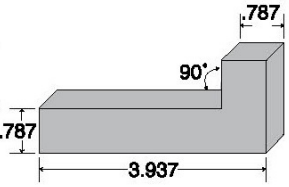


**TP55T** 1.76 lbs.

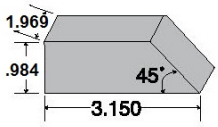


**TP56T** 2.97 lbs.

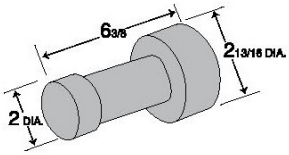


**TP601T** 12.25 lbs.

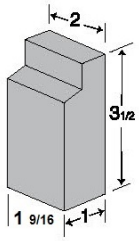


**TP605T** 3.39 lbs.

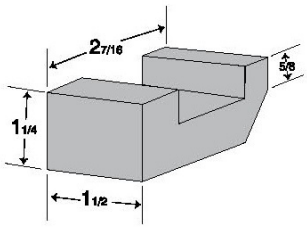


**TP634T** 2.02 lbs.

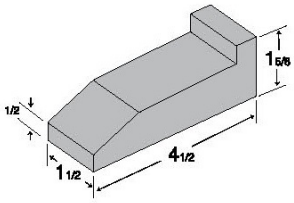


**TP639T** 3.77 lbs.

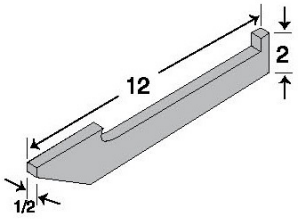


**TP646T** 6.05 lbs.

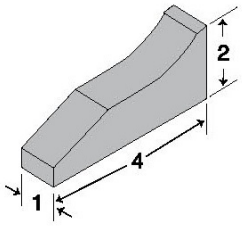


**TP647T** 3.15 lbs.

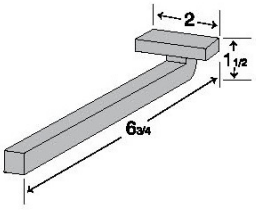


**TP662T** 4.38 lbs.

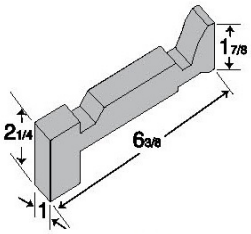


**TP670T** 5.23 lbs.

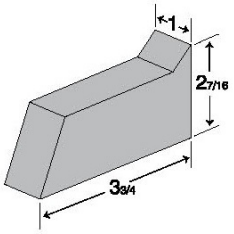


**TP721T** 3.30 lbs.

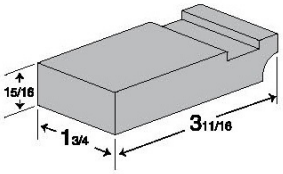


**TP723T** 3.08 lbs.

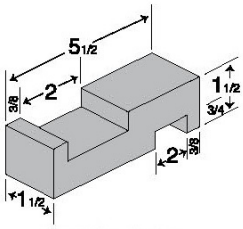


**TP736T** 4.63 lbs.

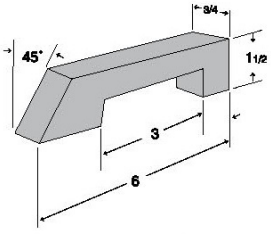


**TP760B-1T** 2.86 lbs.

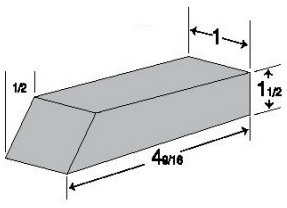


**TP760B-10T** 3.55 lbs.

**Andere Formen und Abmessungen sind auf Anfrage lieferbar**
**OTHER SHAPES AND DIMENSIONS ARE AVAILABLE ON REQUEST**

# Gegenhalteisen / BUCKING BARS

| | | | |
|---|---|---|---|
| 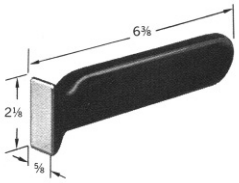 | 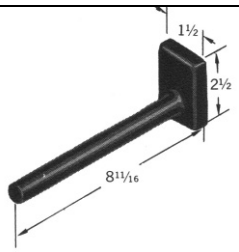 | 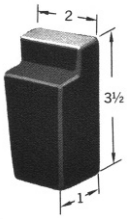 | 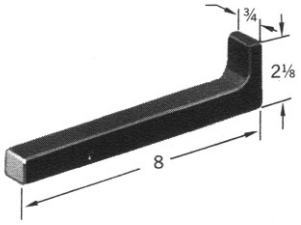 |
| **602** 1.1/4 lbs. | **604** 1.3/4 lbs. | **605** 1.1/2 lbs. | **608** 1.1/4 lbs. |
| 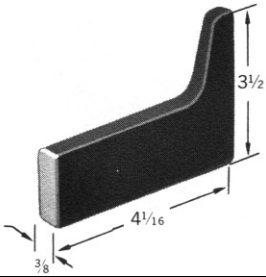 | 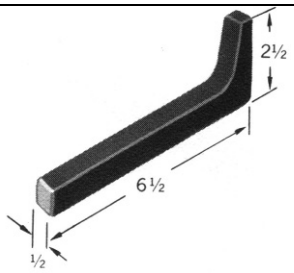 | 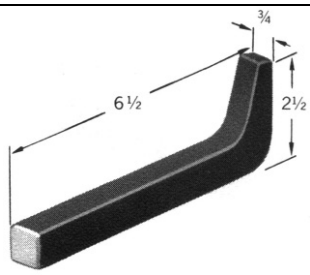 | 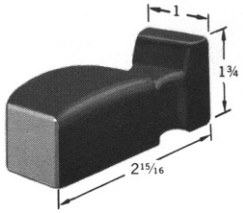 |
| **610** 3/4 lbs. | **611** 1 lbs. | **612** 1.1/4 lbs. | **616** 1 lbs. |
| 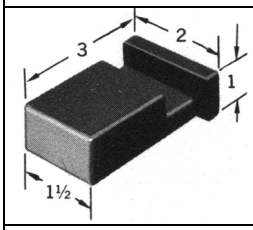 | 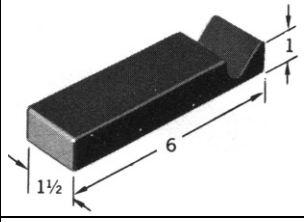 | 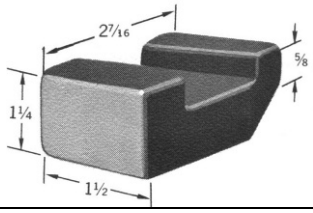 | 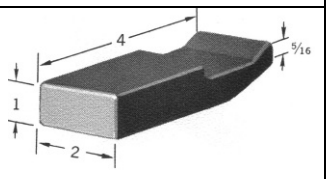 |
| **619** 1.1/4 lbs. | **622** 2.1/2 lbs. | **634** 1 lbs. | **637** 1.3/4 lbs. |
| 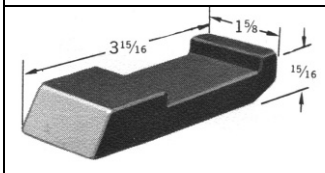 | 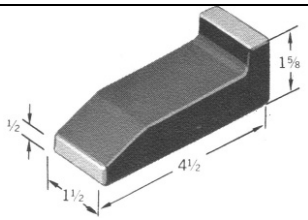 | 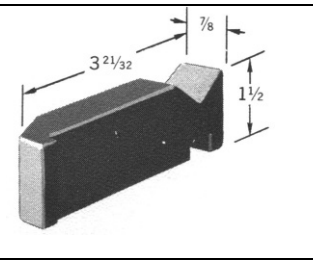 | 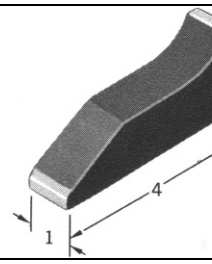 |
| **638** 1.1/4 lbs. | **639** 2 lbs. | **643** 1.1/4 lbs. | **647** 1.1/2 lbs. |
| 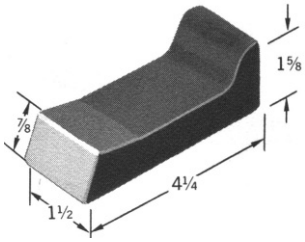 | 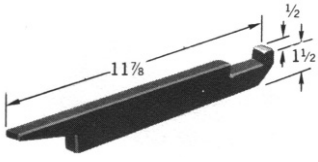 | 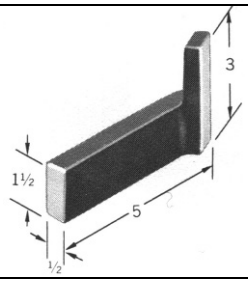 | 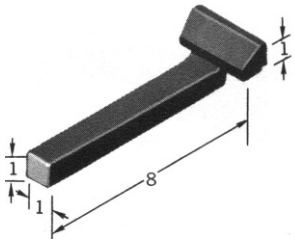 |
| **648** 1.3/4 lbs. | **649** 2 lbs. | **656** 1.1/4 lbs. | **668** 3.1/4 lbs. |
| 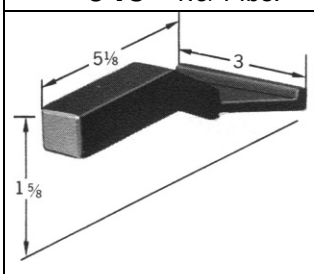 | 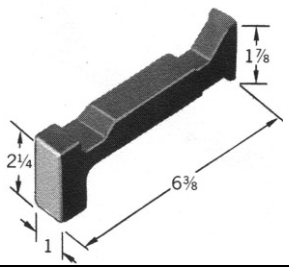 | 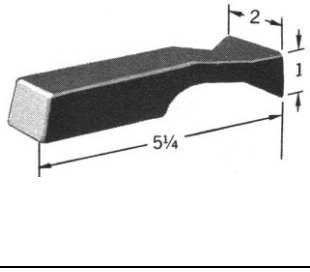 | 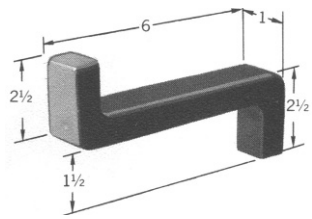 |
| **669** 1 1/2 lbs. | **670** 2 lbs. | **681** 1.1/2 lbs. | **690** 2.3/4 lbs. |

# Gegenhalteisen / BUCKING BARS

| | | | |
|---|---|---|---|
| 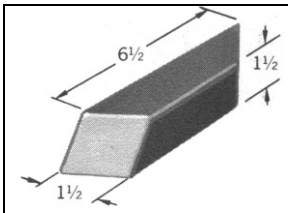 | 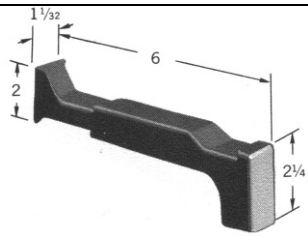 | 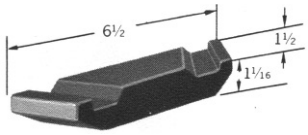 | 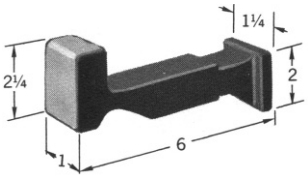 |
| **692** 3 lbs. | **694** 2 lbs. | **702** 2.1/4 lbs. | **719** 2 lbs. |
| 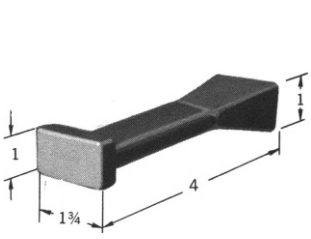 | 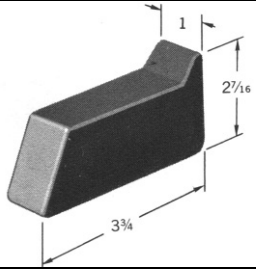 | 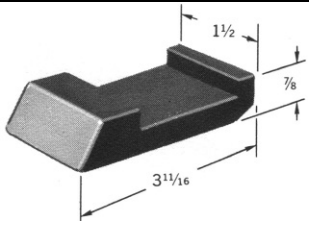 | 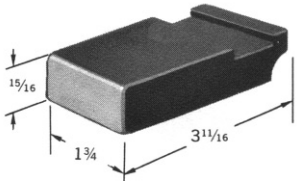 |
| **720** 3/4 lbs. | **721** 1.3/4 lbs. | **722** 1 lbs. | **723** 1.1/2 lbs. |
| 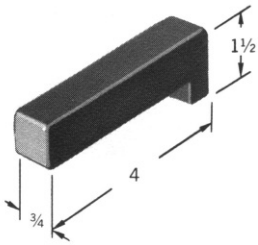 | 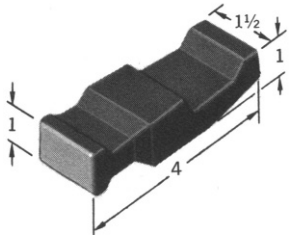 | 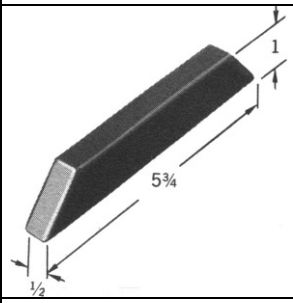 | 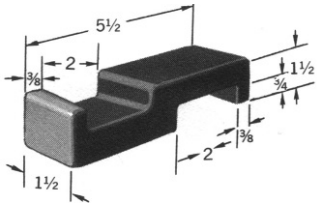 |
| **727** 1 lbs. | **730** 1.1/4 lbs. | **732** 3/4 lb. | **736** 2.1/2 lbs. |
| 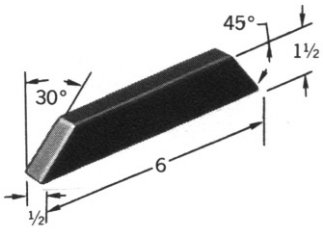 | 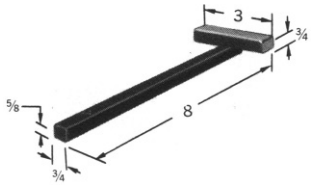 | 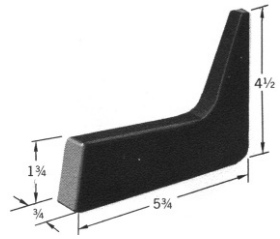 | 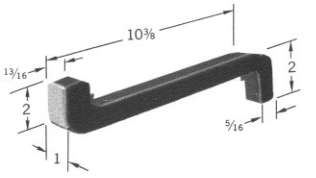 |
| **737** 1 lbs. | **750D-23** 1.1/2 lbs. | **750N-1** 2.1/4 lbs. | **750S- 1** 3.1/4 lbs. |
| 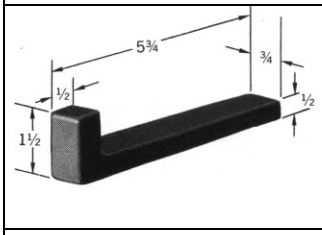 | 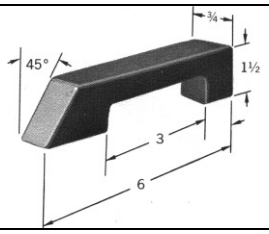 | 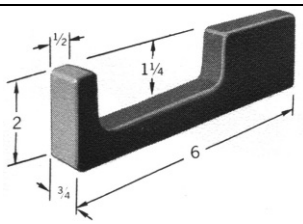 | 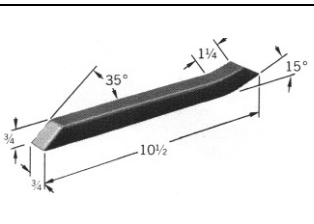 |
| **751Y-11** 3/4 lbs. | **760B-2** 1 lbs. | **760B-3** 1.1/2 lbs. | **760B-7** 1.1/2 lbs. |
| 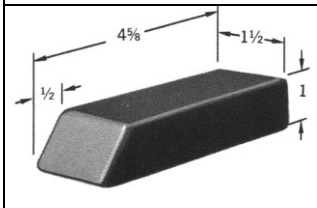 | 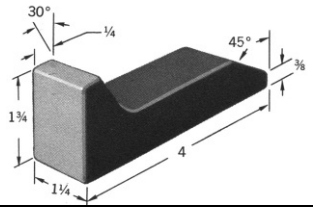 | | |
| **760B-10** 3/4 lb. | **763** 2.1/2 lbs. | | |

**Schwermetall (Wolfram) Gegenhalteisen sind auf Anfrage lieferbar**
**HEAVY METAL (WOLFRAM) BUCKING BARS ARE AVAILABLE ON REQUEST**

# Rückschlaggedämpfter Gegenhalteeisen-Satz
TRAUMA REDUCING BUCKING BAR - KIT

# 1001K

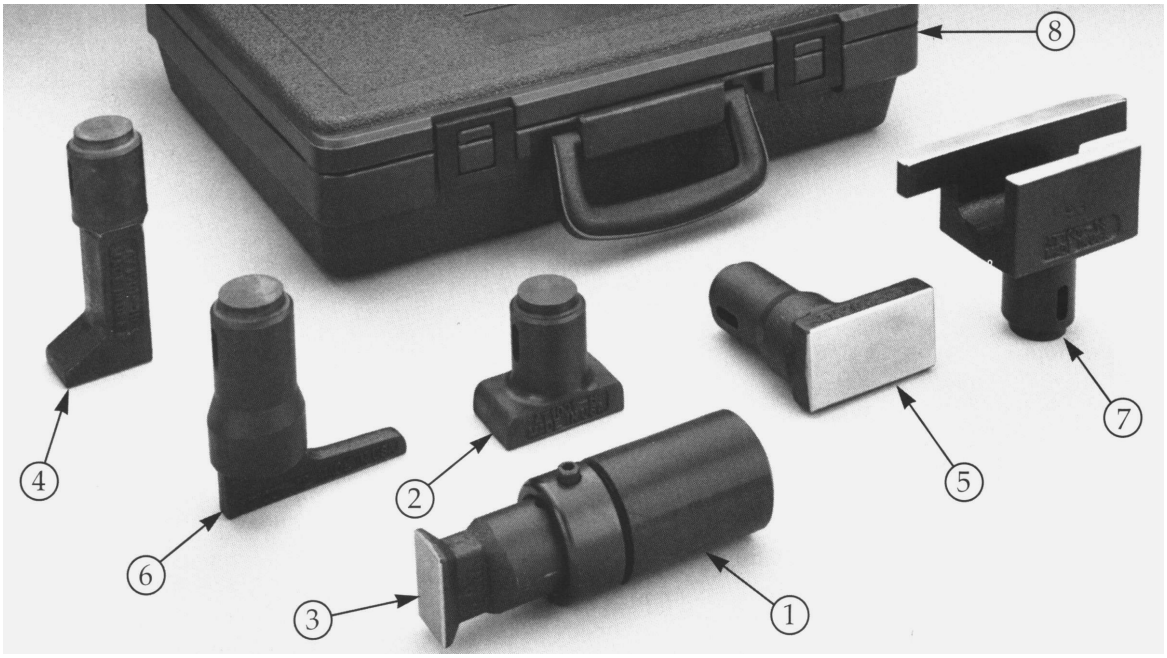


| Pos. ITEM | Beschreibung DESCRIPTION | Artikel-Nr. PART NO. |
|---|---|---|
| 1 | **Halter/**HANDLE | **1001-A** |
| 2 | **Gegenhalteeisen/**BAR | **1001-8** |
| 3 | **Gegenhalteeisen/**BAR | **1001-9** |
| 4 | **Gegenhalteeisen/**BAR | **1001-10** |
| 5 | **Gegenhalteeisen/**BAR | **1001-11** |
| 6 | **Gegenhalteeisen/**BAR | **1001-12** |
| 7 | **Gegenhalteeisen/**BAR | **1001-13** |
| 8 | **Koffer/**CARRYING CASE | **1001-14** |

# **Hand-Nietpressen** / HAND RIVET SQUEEZER

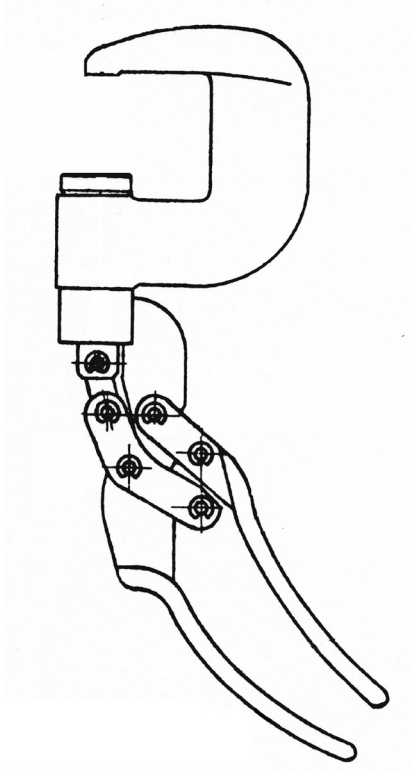

**NZ62 (410510)**

**360° Schwenkkopf, feststellbar in jeder Position**
**Mit verstellbarem Stößel (max. 15 mm)**
**Schaftaufnahme: 4,76 mm**
**Hub: 8 mm**
**Nietleistung: Aluminium 2,6 mm Stahl 2,0 mm**
**Ohne Nietbügel !**
**Bitte aus nachstehender Tabelle auswählen!**

360° SWIVEL YOKE CAN BE LOCKED IN ANY POSITION
WITH ADJUSTABLE SET HOLDER (MAX. .590")
RIVET SHANK 3/16"
STROKE: .315"
RIVET CAPACITY: ALUMINUM .1024" STEEL .0787"
WITHOUT C-YOKE !
PLEASE SELECT FROM FOLLOWING CHART !

## **C-Bügel für NZ62** / C-YOKES FOR NZ62

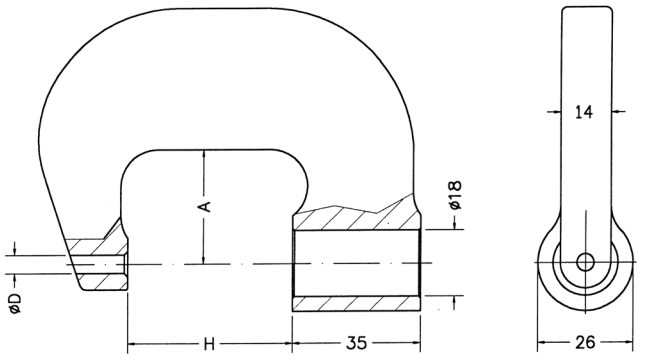


| **Artikel-Nr.** PART NO. | **für Nietschaft** FOR RIVET SHANK | **Abmessungen** DIMENSIONS | |
|---|---|---|---|
| | | **A** | **H** |
| **417002** | **3/16"** (4,76 mm) | **30 mm** (1.18") | **45 mm** (1.77") |
| **417007** | **3/16"** (4,76 mm) | **40 mm** (1.57") | **45 mm** (1.77") |
| **417012** | **3/16"** (4,76 mm) | **60 mm** (2.36") | **45 mm** (1.77") |
| **417052** | **3/16"** (4,76 mm) | **40 mm** (1.57") | **70 mm** (2.76") |
| **417057** | **3/16"** (4,76 mm) | **60 mm** (2.36") | **70 mm** (2.76") |
| **417062** | **3/16"** (4,76 mm) | **100 mm** (3.93") | **70 mm** (2.76") |

# **Hand-Nietpressen** / HAND RIVET SQUEEZER

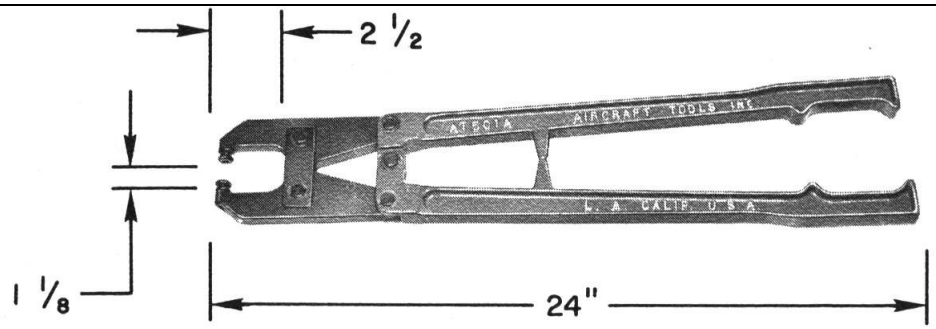


| **Artikel-Nr.**<br>PART NO. | **für Nietschaft**<br>FOR RIVET SHANK | **Bemerkungen**<br>REMARKS |
|---|---|---|
| | | |
| **501-A** | **3/16"** (4,76 mm) | **verstellbarer Nietschafthalter**<br>ADJUSTABLE RIVET SET HOLDER |

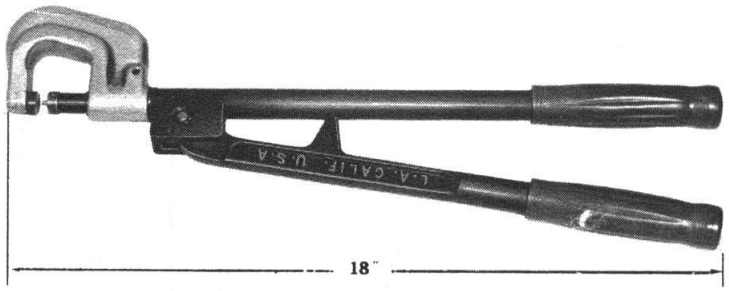


**360° Schwenkkopf, festellbar in jeder Position**
360° SWIVEL YOKE CAN BE LOCKED IN ANY POSITION

| **Artikel-Nr.**<br>PART NO. | **für Nietschaft**<br>FOR RIVET SHANK | Ausladung C-Bügel | **Bemerkungen**<br>REMARKS |
|---|---|---|---|
| | | | |
| **502-AHD** | **3/16"** (4,76 mm) | **1.1/2"** (38,1 mm) | **verstellbarer Nietschafthalter**<br>ADJUSTABLE RIVET SET HOLDER |
| **502-AHE** | **3/16"** (4,76 mm) | **3"** (76,2 mm) | **verstellbarer Nietschafthalter**<br>ADJUSTABLE RIVET SET HOLDER |

## **360° Schwenkbügel für pneum. Nietpressen**
360° SWIVEL YOKE ATTACHEMENTS
FOR COMPRESSION RIVETERS

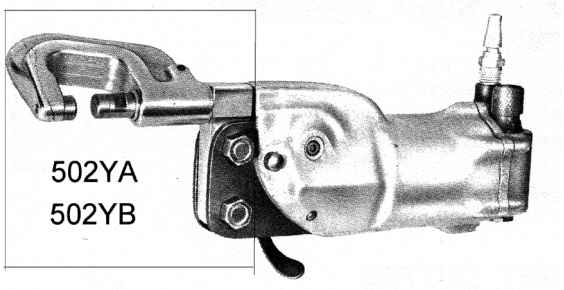


ohne Nietpresse / without Riveter !

**Verstellbarer Nietstößel**
**ADJUSTABLE RIVET SET HOLDER / REACH 1.1/2"**

**Schaftaufnahme 4,76 mm**
**FOR RIVET SHANK 3/16"**

**Empfohlen für Nietpressen Mod.**
RECOMMEND FOR RIVETERS MOD.

**705C / 114CC / CP214**

| | | |
|---|---|---|
| **Artikel-Nr.** / PART NO. | **502YA** | **Ausladung** / REACH: (38 mm) **1.1/2"** |
| **Artikel-Nr.** / PART NO. | **502YB** | **Ausladung** / REACH: (76 mm) **3"** |

# Pneum. Nietpressen mit C-Bügel / COMPRESSION RIVETERS - C TYPE



**114CC & 705-HF**

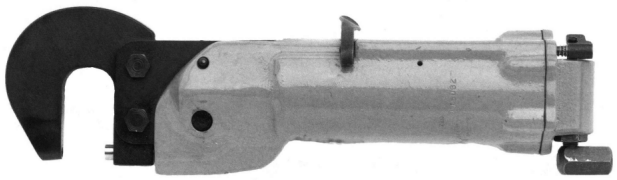

**114TCC & 720-HF**

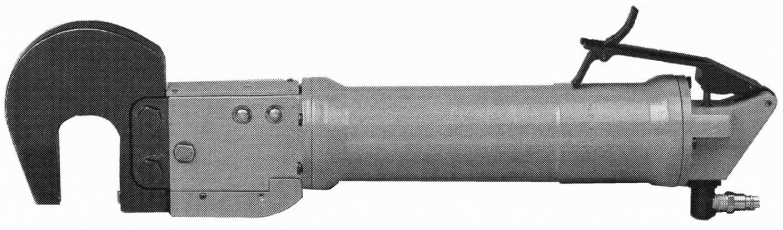

**735-C**

| Model | 114-CC | | 705-HF | | 114-TCC | | 720-HF | | 735-C | |
|---|---|---|---|---|---|---|---|---|---|---|
| | Alu | Steel | Alu | Steel | Alu | Steel | Alu | Steel | Alu | Steel |
| **Nietleistung Kalt-Niete (mm)** CAPACITY COLD RIVET (INCH) | 4,0 5/32 | 3,2 1/8 | 4,0 5/32 | 3,2 1/8 | 6,4 1/4 | 4,8 3/16 | 6,4 1/4 | 4,8 3/16 | 7,9 5/16 | 6,4 1/4 |
| **max. Hub (mm)** MAX. TRAVEL (INCH) | 14,3 mm 9/16 " | | 12,7 mm 1/2 " | | 14,3 mm 9/16 " | | 12,7 mm 1/2 " | | 14,3 mm 9/16 " | |
| **max. Druckkraft mit 6,21 bar** MAX. FORCE mit/with 90 P.S.I. | 18,69 kn 4200 lbs. | | 20,03 kn 4500 lbs. | | 34,26 kn 7700 lbs. | | 40,05 kn 9000 lbs. | | 48,95 kn 11000 lbs. | |
| **max. Kraft ereicht am Hubende:** PART OF STROKE AT MAX. FORCE: | 1,6 mm 1/16" | | 0,8 mm 1/32" | | 1,6 mm 1/16" | | 0,8 mm 1/32" | | 3,2 mm 1/8" | |
| **ca. Gewicht mit Std. C-Bügel** APPR. WEIGHT WITH STD. C -YOKE | 2,0 kg 4.5 lbs. | | 2,0 kg 4.5 lbs. | | 2,5 kg 5.5 lbs. | | 2,5 kg 5.5 lbs. | | 4,6 kg 10.1 lbs. | |
| **ca. Länge mit Std. C-Bügel** APPR. LENGTH with STD C-YOKE | 260 mm 10.1/4" | | 260 mm 10.1/4" | | 362 mm 14" | | 362 mm 14" | | 525 mm 21" | |
| **Anschluß /** AIR INLET | 1/4" NPT | | 1/4" NPT | | 1/4" NPT | | 1/4" NPT | | 1/4" NPT | |

**114CC 114TCC 705-HF 720-HF**

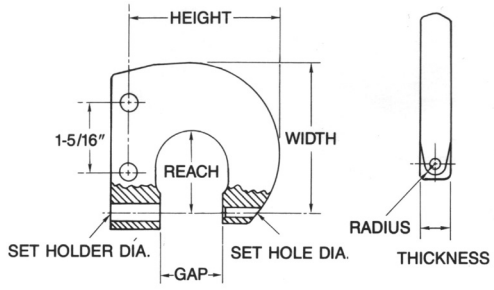


**735-C**

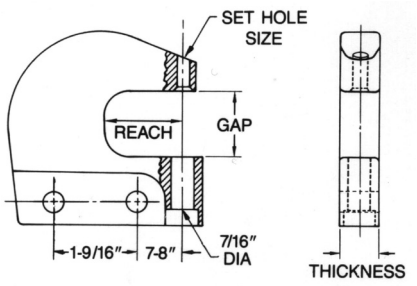


| Bügel Nr. Yoke No. | Reach | Gap | Set Hole | Width | Thickness | | Bügel Nr. Yoke No. | Reach | Gap | Set Hole | Thickness |
|---|---|---|---|---|---|---|---|---|---|---|---|
| **538** | 38 mm **1.1/2"** | 32 mm **1.1/4"** | 4,8 mm **3/16"** | 76 mm **3"** | 14,3 mm **9/16"** | | **7479** | 38 mm **1.1/2"** | 32 mm **1.1/4"** | 4,8 mm **3/16"** | 19,4 mm **3/4"** |
| **958** | 51 mm **2"** | 32 mm **1.1/4"** | 4,8 mm **3/16"** | 90 mm **3.9/16"** | 14,3 mm **9/16"** | | **7481** | 51 mm **2"** | 38 mm **1.1/2"** | 4,8 mm **3/16"** | 22,2 mm **7/8"** |
| **959** | 64 mm **2.1/2"** | 35 mm **1.3/8"** | 4,8 mm **3/16"** | 117 mm **4.5/8"** | 14,3 mm **9/16"** | | **7482** | 76 mm **3"** | 38 mm **1.1/2"** | 4,8 mm **3/16"** | 28,6 mm **1.1/8"** |
| **960** | 76 mm **3"** | 38 mm **1.1/2"** | 4,8 mm **3/16"** | 133 mm **5.1/4"** | 25,4 mm **1"** | | **7483** | 38 mm **1.1/2"** | 51 mm **2"** | 4,8 mm **3/16"** | 25,4 mm **1"** |
| **961** | 89 mm **3.1/2"** | 38 mm **1.1/2"** | 4,8 mm **3/16"** | 154 mm **6.1/16"** | 25,4 mm **1"** | | **7484** | 64 mm **2.1/2"** | 35 mm **1.3/8"** | 4,8 mm **3/16"** | 25,4 mm **1"** |
| | | | | | | | **7485** | 64 mm **2.1/2"** | 44 mm **1.3/4"** | 4,8 mm **3/16"** | 28,6 mm **1.1/8"** |

**Bitte geben Sie bei Bestellung einer Nietpresse die Art.Nr. des gewünschten C-Bügels an**
PLEASE SPECIFY C-YOKE PART-NUMBER WHEN ORDERING

# Pneumatische Nietpressen mit Alligator-Kopf
## COMPRESSION RIVETERS - ALLIGATOR JAW TYPE

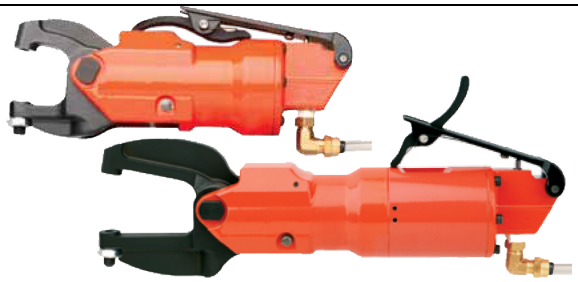

**702 & 702T (Ultra Lite Design)**

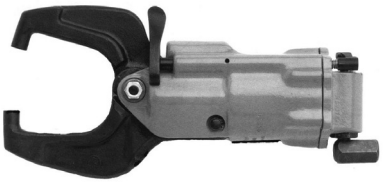

**114AA & 710A-HF**

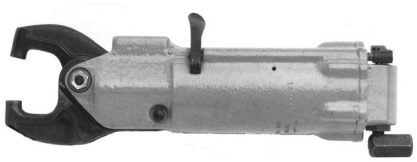

**114TAA & 725A-HF**

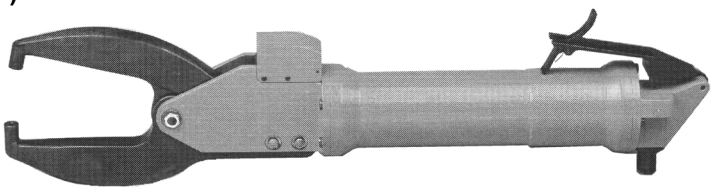

**735A**

| **Model - Bügel-Tiefe**<br>MODEL - JAW REACH | **Nietleistung Kalt-Niete**<br>CAPACITY COLD RIVETS | | **max. Druckkraft mit 6,21 Bar**<br>MAX. FORCE WITH 90 PSI | **max. Kraft ereicht am Hubende**<br>PART OF STROKE AT MAX. FORCE | **Gewicht mit Bügel**<br>WEIGHT WITH JAWS | **Länge**<br>LENGTH | **Anschluß**<br>AIR INLET |
|---|---|---|---|---|---|---|---|
| | **Alu** | **Steel** | | | | | |
| **702 - 1"** | 3,2 mm 1/8" | 2,4 mm 3/32" | 9,78 kn 2200 lbs. | 0,8 mm 1/32" | 1,0 kg 2.2 lbs. | 186mm 7.33 inch | 1/4" NPT |
| **702T - 1"** | 4,0 mm 5/32" | 3,2 mm 1/8" | 17,79 kn 4000 lbs. | 1,6 mm 1/16" | 1,1 kg 2.5 lbs. | 242mm 9.50 inch | 1/4" NPT |
| **702T - 2"** | 3,2 mm 1/8" | 2,4 mm 3/32" | 8,89 kn 2000 lbs. | 0,8 mm 1/32" | 1,2 kg 2.7 lbs. | 267mm 10.50 inch | 1/4" NPT |
| **114AA - 1.1/2"** | 4,0 mm 5/32" | 3,2 mm 1/8" | 19,13 kn 4300 lbs. | 1,6 mm 1/16" | 1,7 kg 3.3/4 lbs. | 233 mm 9.3/16" | 1/4" NPT |
| **710A-HF - 1.1/2"** | 4,0 mm 5/32" | 3,2 mm 1/8" | 20,03 kn 4500 lbs. | 0,8 mm 1/32" | 1,7 kg 3.3/4 lbs. | 233 mm 9.3/16" | 1/4" NPT |
| **114AA - 2.1/4"** | 3,2 mm 1/8" | 2,4 mm 3/32" | 17,35 kn 3900 lbs. | 2,4 mm 3/32" | 1,9 kg 4.1/4 lbs. | 257 mm 10.1/8" | 1/4" NPT |
| **710A-HF - 2.1/4"** | 3,2 mm 1/8" | 2,4 mm 3/32" | 14,69 kn 3300 lbs. | 1,2 mm 3/64" | 1,9 kg 4.1/4 lbs. | 257 mm 10.1/8" | 1/4" NPT |
| **114TAA - 1.1/2"** | 6,4 mm 1/4" | 4,8 mm 3/16" | 34,71kn 7800 lbs. | 1,6 mm 1/16" | 2,3 kg 5 lbs. | 305 mm 12" | 1/4" NPT |
| **725A-HF - 1.1/2"** | 6,4 mm 1/4" | 4,8 mm 3/16" | 40,05 kn 9000 lbs. | 0,8 mm 1/32" | 2,5 kg 5.1/2 lbs. | 305 mm 12" | 1/4" NPT |
| **114TAA - 2.1/4"** | 4,8 mm 3/16" | 4,0 mm 5/32" | 28,03 kn 6300 lbs. | 2,4 mm 3/32" | 2,5 kg 5.1/2 lbs. | 330 mm 13" | 1/4" NPT |
| **725A-HF - 2.1/4"** | 4,8 mm 3/16" | 4,0 mm 5/32" | 28,70 kn 6450 lbs. | 1,2 mm 3/64" | 2,7 kg 6 lbs. | 330 mm 13" | 1/4" NPT |
| **114TAA - 3"** | 4,0 mm 5/32" | 3,2 mm 1/8" | 24,92 kn 5600 lbs. | 3,2 mm 1/8" | 2,7 kg 6 lbs. | 349 mm 13.3/4" | 1/4" NPT |
| **725A-HF - 3"** | 4,0 mm 5/32" | 3,2 mm 1/8" | 22,70 kn 5100 lbs. | 1,6 mm 1/16" | 2,8 kg 6.1/4 lbs. | 349 mm 13.3/4" | 1/4" NPT |
| **735A - 3"** | 6,4 mm 1/4" | 4,8 mm 3/16" | 44,50 kn 10000 lbs. | 1,6 mm 1/16" | 4,4 kg 9.3/4 lbs. | 565 mm 22.1/4" | 1/4" NPT |
| **735A - 5"** | 4,8 mm 3/16" | 4,0 mm 5/32" | 30,26 kn 6800 lbs. | 2,4 mm 3/32" | 5,0 kg 11 lbs. | 616 mm 24.1/4" | 1/4" NPT |

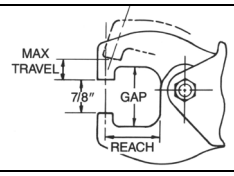


| | **Bügel-Satz** JAW ASSY | **fester Bügel** STAT. JAW | **beweglicher Bügel** MOVING JAW | **Bohrung** Set Hole Size | **Tiefe** REACH | **Höhe** GAP | **Max. Weg** MAX.TRAVEL |
|---|---|---|---|---|---|---|---|
| 702 & 702T-1" 3/16" Set Hole | **22342** | **---** | **---** | 4,76 mm **3/16"** | 25.4 mm **1"** | 21,4 mm **1-7/64"** | 9,50 mm **3/8 "** |
| 702 & 702T-1" 3/16" ADJUSTIBLE | **22442** | **---** | **---** | 4,76 mm **3/16"** | 25.4 mm **1"** | 21,4 mm **1-7/64"** | 9,50 mm **3/8 "** |
| 702T-2" 3/16" ADJUSTIBLE | **22581** | **---** | **---** | 4,76 mm **3/16"** | 50.8 mm **2"** | 21,4 mm **1-7/64"** | 19,05 mm **3/4"** |
| 114AA & 114TAA-1.1/2" | **---** | **5002** | **5004** | 4,76 mm **3/16"** | 38 mm **1.1/2"** | 41 mm **1.5/8"** | 15,88 mm **5/8"** |
| 114AA & 114TAA-2.1/4" | **---** | **5002-2.1/4** | **5004-2.1/4** | 4,76 mm **3/16"** | 57 mm **2.1/4"** | 45 mm **1.3/4"** | 22,23 mm **7/8"** |
| 114AA & 114TAA-3" | **---** | **5002-3** | **5004-3** | 4,76 mm **3/16"** | 76 mm **3"** | 54 mm **2.1/8"** | 31,75 mm **1.1/4"** |
| 710A-HF & 725A-HF-1.1/2" | **7360** | **457** | **3488** | 4,76 mm **3/16"** | 38 mm **1.1/2"** | 41 mm **1.5/8"** | 15,88 mm **5/8"** |
| 710A-HF & 725A-HF-2.1/4" | **7362** | **1213** | **3490** | 4,76 mm **3/16"** | 57 mm **2.1/4"** | 45 mm **1.3/4"** | 22,23 mm **7/8"** |
| 710A-HF & 725A-HF-3" | **7364** | **1215** | **3491** | 4,76 mm **3/16"** | 76 mm **3"** | 54 mm **2.1/8"** | 31,75 mm **1.1/4"** |
| 735A-3" | **17148** | **17318** | **17317** | 4,76 mm **3/16"** | 76 mm **3"** | 57 mm **2.1/4"** | 22,23 mm **7/8"** |
| 735A-5" | **17146** | **17284** | **17285** | 4,76 mm **3/16"** | 127 mm **5"** | 57 mm **2.1/4"** | 29,37 mm **1.5/32"** |

# Pneumatische Nietpressen mit Alligator-Kopf
## COMPRESSION RIVETERS - ALLIGATOR JAW TYPE

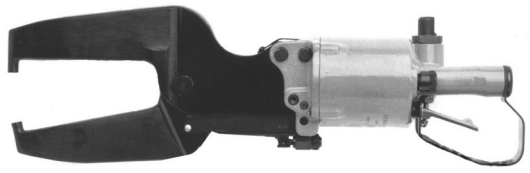

740A & 151A

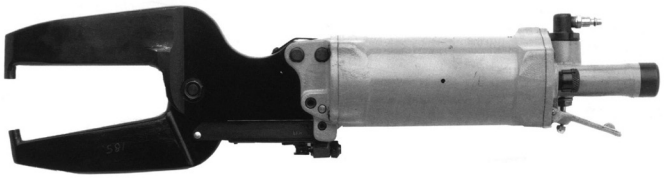

750A

| Modell - Bügel-Tiefe<br>MODEL - JAW REACH | Nietleistung Kalt-Niete<br>CAPACITY COLD RIVETS | | max. Druckkraft mit 6,21Bar<br>MAX. FORCE WITH 90 PSI | max. Kraft ereicht am Hubende<br>PART OF STROKE AT MAX. FORCE | Gewicht mit Bügel<br>WEIGHT WITH JAWS | Länge<br>LENGTH | Anschluß<br>AIR INLET |
|---|---|---|---|---|---|---|---|
| | **Alu** | **Steel** | | | | | |
| **740A - 2.7/8"** | 4,8 mm 3/16" | 4,0 mm 5/32" | 36,19 kn 8150 lbs. | 3,2 mm 1/8" | 7,5 kg 16.1/2 lbs. | 502 mm 19.3/4" | 1/4" NPT |
| **151A - 2.7/8"** | 4,0 mm 5/32" | 3,2 mm 1/8" | 23,14 kn 5200 lbs. | 3,2 mm 1/8" | 7,3 kg 16 lbs. | 495 mm 19.1/2" | 1/4" NPT |
| **740A - 5"** | 4,0 mm 5/32" | 3,2 mm 1/8" | 20,85 kn 4695 lbs. | 3,2 mm 1/8" | 9,9 kg 21.3/4 lbs. | 552 mm 21.3/4" | 1/4" NPT |
| **151A - 5"** | 3,2 mm 1/8" | 2,4 mm 3/32" | 15,13 kn 3400 lbs. | 3,2 mm 1/8" | 9,1 kg 20 lbs. | 549 mm 21.5/8" | 1/4" NPT |
| **740A - 7"** | 3,2 mm 1/8"" | 2,4 mm 3/32" | 14,88 kn 3350 lbs. | 4,8 mm 3/16" | 11,6 kg 25.1/2 lbs. | 603 mm 23.3/4" | 1/4" NPT |
| **151A - 7"** | 3,2 mm 1/8" | 2,4 mm 3/32" | 13,35 kn 3000 lbs. | 4,8 mm 3/16" | 10,9 kg 24 lbs. | 600 mm 23.5/8" | 1/4" NPT |
| | | | | | | | |
| **750A - 2.7/8"** | 7,9 mm 5/16" | 6,4 mm 1/4" | 72,38 kn 16300 lbs. | 4,8 mm 3/16" | 8,6 kg 19 lbs. | 635 mm 25" | 1/4" NPT |
| **750A - 5"** | 6,4 mm 1/4" | 4,8 mm 3/16" | 41,70 kn 9390 lbs. | 4,8 mm 3/16" | 11,0 kg 24.1/4" | 685 mm 27" | 1/4" NPT |
| **750A - 7"** | 4,8 mm 3/16" | 4,0 mm 5/32" | 29,84 kn 6720 lbs. | 4,8 mm 3/16" | 12,7 kg 28 lbs. | 736 mm 29" | 1/4" NPT |
| **750A - 9.1/8"** | 4,8 mm 3/16" | 4,0 mm 5/32" | 22,82 kn 5140 lbs. | 4,8 mm 3/16" | 13,1 kg 29 lbs. | 790 mm 31.1/8" | 1/4" NPT |

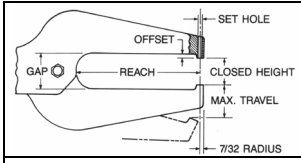


| | **Bügel-Satz Nr.**<br>JAW - ASSY NO | **fester Bügel**<br>STAT. JAW | **bewegl. Bügel**<br>MOVING JAW | **Bohrung**<br>Set Hole Size | **Bügel-Tiefe**<br>REACH | **Bügel-Höhe**<br>GAP | **geschlossene Bügelhöhe**<br>CLOSED HIGHT | **Max. Weg**<br>MAX. TRAVEL |
|---|---|---|---|---|---|---|---|---|
| **740A-2.7/8"** | **2460** | **2459** | **2461** | 4,76 mm **3/16"** | 73 mm **2.7/8"** | 41 mm **1.5/8"** | 22,23 mm **7/8"** | 20,64 mm **13/16"** |
| **740A-5"** | **1767** | **1744** | **1745** | 4,76 mm **3/16"** | 127 mm **5"** | 41 mm **1.5/8"** | 22,23 mm **7/8"** | 34,93 mm **1.3/8"** |
| **740A-7"** | **1769** | **582** | **581** | 4,76 mm **3/16"** | 178 mm **7"** | 54 mm **2.1/8"** | 19,05 mm **3/4"** | 47,63 mm **1.7/8"** |
| **151A-2.7/8"** | | **35208** | **35209** | 4,76 mm **3/16"** | 73 mm **2.7/8"** | 41 mm **1.5/8"** | 22,23 mm **7/8"** | 20,64 mm **13/16"** |
| **151A-5"** | | **35210** | **35211** | 4,76 mm **3/16"** | 127 mm **5"** | 41 mm **1.5/8"** | 22,23 mm **7/8"** | 34,93 mm **1.3/8"** |
| **151A-7"** | | **35220** | **35219** | 4,76 mm **3/16"** | 178 mm **7"** | 54 mm **2.1/8"** | 38,10 mm **1.1/2"** | 42,86 mm **1.11/16"** |
| **750A-2.7/8"** | **2460** | **2459** | **2461** | 4,76 mm **3/16"** | 73 mm **2.7/8"** | 41 mm **1.5/8"** | 22,23 mm **7/8"** | 20,64 mm **13/16"** |
| **750A-5"** | **1767** | **1744** | **1745** | 4,76 mm **3/16"** | 127 mm **5"** | 41 mm **1.5/8"** | 22,23 mm **7/8"** | 34,93 mm **1.3/8"** |
| **750A-7"** | **1769** | **582** | **581** | 4,76 mm **3/16"** | 178 mm **7"** | 54 mm **2.1/8"** | 19,05 mm **3/4"** | 47,63 mm **1.7/8"** |
| **750A-9.1/8"** | **449** | **414** | **549** | 4,76 mm **3/16"** | 232 mm **9.1/8"** | 54 mm **2.1/8"** | 19,05 mm **3/4"** | 63,50 mm **2.1/2"** |

# Pneum. Nietpressen mit Fußschalter und C-Bügel für Tischmontage

FOOT CONTROL COMPRESSION RIVETERS - C TYPE - BENCH MODELS

# 114TCC-98G

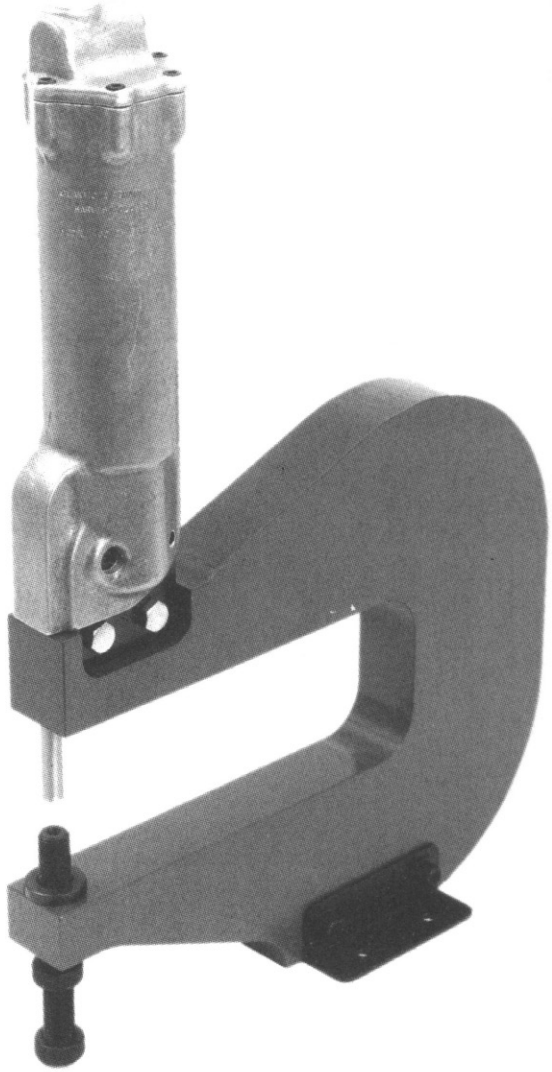

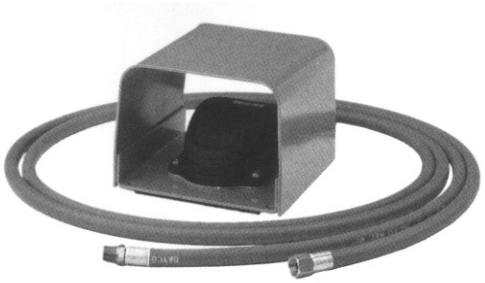

| | Alu | Steel |
|---|---|---|
| **Nietleistung Kalt-Niete (mm)** | 4,8 mm | 4,0 mm |
| CAPACITY COLD RIVET (INCH) | 3/16 | 5/32 |
| **max. Hub (mm)** | 14,3 mm | |
| MAX. TRAVEL (INCH) | 9/16 " | |
| **max. Druckkraft mit 6,21 bar** | 26,70 kn | |
| MAX. FORCE mit/with 90 P.S.I. | 6000 lbs. | |
| **max. Kraft ereicht am Hubende:** | 1,6 mm | |
| PART OF STROKE AT MAX. FORCE: | 1/16" | |
| **ca. Gewicht mit C-Bügel** | 28 kg | |
| APPR. WEIGHT WITH C -YOKE | 62 lbs. | |
| **Anschluß** | 1/4" NPT | |
| AIR INLET | | |
| **Bügel-Tiefe (innen)** | 254,0 mm | |
| YOKE-REACH | 10" | |
| **Bügel-Höhe (innen)** | 88,9 mm | |
| YOKE-GAP | 3.1/2" | |
| **Bügel-Stärke** | 41,3 mm | |
| YOKE-THICKNESS | 1.5/8" | |

# Pneum. Nietpressen mit Fußschalter und C-Bügel für Tischmontage
## FOOT CONTROL COMPRESSION RIVETERS - C TYPE - BENCH MODELS

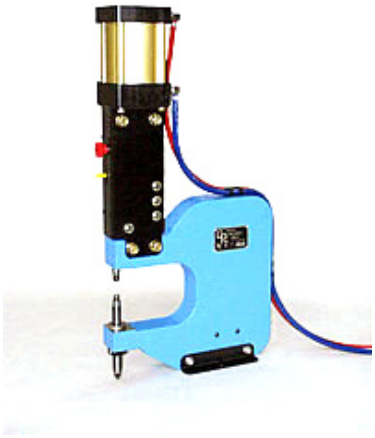

**8000CS-6**

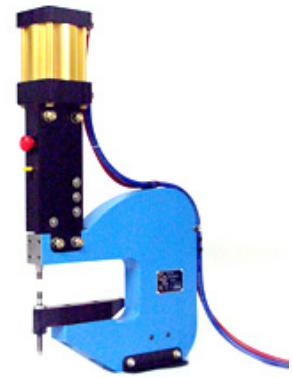

**8000CSA-9.1/2**

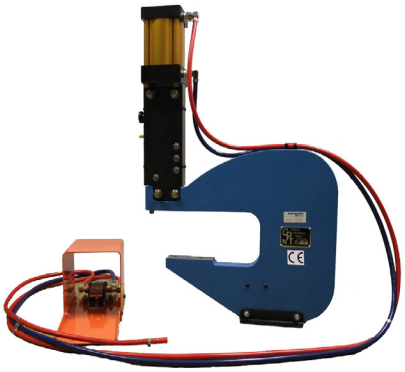

**8000CSA-12.1/2**



**15KCSA-24.1/2**

Standard Zubehör
Standard Accessoires
15KCSA & 8000CSA





Bodengestell inkl. Wartungseinheit
Pedestal Mounting
für/for Mod.
8000CS - 8000CSA - 15KCS - 15KCSA
(optional)





FC-4

Fußschalter
Schlauchlänge ca.
10 Ft. (3 Meter)
(im Lieferumfang)

| **Artikel-Nr.** PART NUMBER | **max. Druckkraft bei 6,3 bar** MAX. FORCE AT 90 PSI | **Standard C-Bügel** STANDARD C-YOKES | | **max. Nietdurchmesser** RIVET DIAMETER CAPACITIES | | |
|---|---|---|---|---|---|---|
| | | **Ausladung** REACH | **Höhe** GAP | **Vollniet Aluminium** SOLID ALUMINUM | **Vollniet Stahl** SOLID STEEL | **Rohrniet Stahl** TUBULAR STEEL |
| **8000CS-6** | 8800 LBS (39 kN) | 6" (152 mm) | 5" (127 mm) | 1/4" (6,4mm) | 3/16" (4,8 mm) | 5/16" (7,9mm) |
| **8000CSA-9.1/2** | 8800 LBS (39 kN) | 9.1/2" (241 mm) | 5" (127 mm) | 1/4" (6,4mm) | 3/16" (4,8 mm) | 5/16" (7,9 mm) |
| **8000CSA-12.1/2** | 8800 LBS (39 kN) | 12.1/2" (318 mm) | 5" (127 mm) | 1/4" (6,4mm) | 3/16" (4,8 mm) | 5/16" (7,9 mm) |
| **8000CSA-24.1/2** | 8800 LBS (39 kN) | 24.1/2" (622 mm) | 5.3/4" (146 mm) | 1/4" (6,4mm) | 3/16" (4,8 mm) | 5/16" (7,9 mm) |
| | | | | | | |
| **15KCS-6** | 15000 LBS (66 kN) | 6" (152 mm) | 5" (127 mm) | 3/8" (9,53 mm) | 5/16" (7,9mm) | 3/8" (9,53 mm) |
| **15KCSA-9.1/2** | 15000 LBS (66 kN) | 9.1/2" (241 mm) | 5" (127 mm) | 3/8" (9,53 mm) | 5/16" (7,9mm) | 3/8" (9,53 mm) |
| **15KCSA-12.1/2** | 15000 LBS (66 kN) | 12.1/2" (318 mm) | 5" (127 mm) | 3/8" (9,53 mm) | 5/16" (7,9mm) | 3/8" (9,53 mm) |
| **15KCSA-24.1/2** | 15000 LBS (66 kN) | 24.1/2" (622 mm) | 5.3/4" (146 mm) | 3/8" (9,53 mm) | 5/16" (7,9mm) | 3/8" (9,53 mm) |

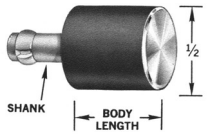


Schaftdurchmesser 4,76 mm
**Shank Diameter 3/16"**

## FLACHE NIETEINSÄTZE FÜR SENKKOPFNIETE
RIVET SQUEEZER SETS, FLUSH-TYPE
**NASM20426 / AN426 / LN 9199 / DIN 65399**

**Körperdurchmesser 12,7 mm / Body Diameter 1/2"**

| Länge 3,18 mm LENGTH 1/8" | Länge 6,35 mm LENGTH 1/4" | Länge 9,53 mm LENGTH 3/8" | Länge 12,7 mm LENGTH 1/2" | Länge 15,88 mm LENGTH 5/8" | Länge 19,05 mm LENGTH 3/4" |
|---|---|---|---|---|---|
| **Art.Nr. / Part No.** | **Art.Nr. / Part No.** | **Art.Nr. / Part No.** | **Art.Nr. / Part No.** | **Art.Nr. / Part No.** | **Art.Nr. / Part No.** |
| **109AN** | **109AP** | **109AR** | **109AS** | **109AT** | **109AW** |

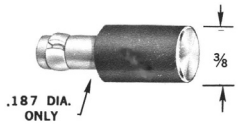


Schaftdurchmesser 4,76 mm
**Shank Diameter 3/16"**

## FLACHE NIETEINSÄTZE
RIVET SQUEEZER SETS, FLUSH-TYPE
**NASM20426 / AN426 / LN 9199 / DIN 65399**

**Körperdurchmesser 9,53 mm / Body Diameter 3/8"**

| Länge 3,18 mm LENGTH 1/8" | Länge 6,35 mm LENGTH 1/4" | Länge 9,53 mm LENGTH 3/8" | Länge 12,7 mm LENGTH 1/2" | Länge 15,88 mm LENGTH 5/8" | Länge 19,05 mm LENGTH 3/4" |
|---|---|---|---|---|---|
| **Art.Nr. / Part No.** | **Art.Nr. / Part No.** | **Art.Nr. / Part No.** | **Art.Nr. / Part No.** | **Art.Nr. / Part No.** | **Art.Nr. / Part No.** |
| **109EN** | **109EP** | **109ER** | **109ES** | **109ET** | **109EW** |

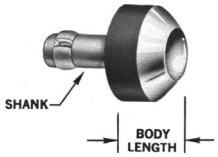


## Nieteinsätze mit Kalotte, für Universal-Rundkopfniete
RIVET SQUEEZER SETS, CUPPED-TYPE
**NASM20470 / AN470 / LN 9198 / DIN 65398**

**Schaftdurchmesser 4,76 mm / Shank Diameter 3/16"**

| Nutzlänge BODY LENGTH | Nietgröße 2,4 mm Rivet Size 3/32" | Nietgröße 3,2 mm Rivet Size 1/8" | Nietgröße 4,0 mm Rivet Size 5/32" | Nietgröße 4,8 mm Rivet Size 3/16" | Nietgröße 6,4 mm Rivet Size 1/4" |
|---|---|---|---|---|---|
| **mm / Inch** | **Art.Nr. / Part No.** | **Art.Nr. / Part No.** | **Art.Nr. / Part No.** | **Art.Nr. / Part No.** | **Art.Nr./Part No.** |
| 3,18 / **1/8"** | **108AN-3/32"** | **108AN-1/8"** | **108AN-5/32"** | **108AN-3/16"** | |
| 6,35 / **1/4"** | **108AP-3/32"** | **108AP-1/8"** | **108AP-5/32"** | **108AP-3/16"** | **108AP-1/4"** |
| 9,53 / **3/8"** | **108AR-3/32"** | **108AR-1/8"** | **108AR-5/32"** | **108AR-3/16"** | **108AR-1/4"** |
| 12,70 / **1/2"** | **108AS-3/32"** | **108AS-1/8"** | **108AS-5/32"** | **108AS-3/16"** | **108AS-1/4"** |
| 15,88 / **5/8"** | **108AT-3/32"** | **108AT-1/8"** | **108AT-5/32"** | **108AT-3/16"** | |
| 19,05 / **3/4"** | **108AW-3/32"** | **108AW-1/8"** | **108AW-5/32"** | **108AW-3/16"** | |

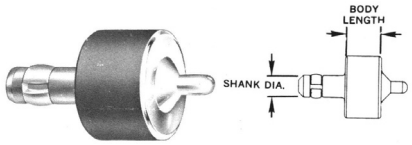


## Warzeinsätze (Stempel) 100°
DIMPLE DIES (MALE) 100°
**NASM20426 / AN426 / LN 9199 / DIN 65399**

**Schaftdurchmesser 4,76 mm / Shank Diameter 3/16"**

| Nutzlänge BODY LENGTH | Nietgröße 2,4 mm Rivet Size 3/32" | Nietgröße 3,2 mm Rivet Size 1/8" | Nietgröße 4,0 mm Rivet Size 5/32" | Nietgröße 4,8 mm Rivet Size 3/16" | Nietgröße 6,4 mm Rivet Size 1/4" |
|---|---|---|---|---|---|
| **mm / Inch** | **Art.Nr. / Part No.** | **Art.Nr. / Part No.** | **Art.Nr. / Part No.** | **Art.Nr. / Part No.** | **Art.Nr. / Part No.** |
| 6,35 / **1/4"** | **206A3P** | **206A4P** | **206A5P** | **206A6P** | **206A8P** |
| 9,53 / **3/8"** | **206A3R** | **206A4R** | **206A5R** | **206A6R** | **206A8R** |

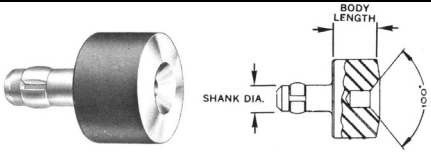


## Warzeinsätze (Matritze) 100°
DIMPLE DIES (FEMALE) 100°
**NASM20426 / AN426 / LN 9199 / DIN 65399**

**Schaftdurchmesser 4,76 mm / Shank Diameter 3/16"**

| Nietgröße 2,4 mm Rivet Size 3/32" | Nietgröße 3,2 mm Rivet Size 1/8" | Nietgröße 4,0 mm Rivet Size 5/32" | Nietgröße 4,8 mm Rivet Size 3/16" | Nietgröße 6,4 mm Rivet Size 1/4" |
|---|---|---|---|---|
| **Art.Nr. / Part No.** (ca. Länge/appr. Length) | **Art.Nr. / Part No.** (ca. Länge/appr. Length) | **Art.Nr. / Part No.** (ca. Länge/appr. Length) | **Art.Nr. / Part No.** (ca. Länge/appr. Length) | **Art.Nr. / Part No.** (ca. Länge/appr. Length) |
| **207A3P** (6,3 mm / 1/4") | **207A4P** (6,3 mm / 1/4") | **207A5P** (6,3 mm / 1/4") | **207A6P** (6,3 mm / 1/4") | **207A8P** (6,3 mm / 1/4") |
| **207A3R** (9,5 mm / 3/8") | **207A4R** (9,5 mm / 3/8") | **207A5R** (9,5 mm / 3/8") | **207A6R** (9,5 mm / 3/8") | **207A8R** (9,5 mm / 3/8") |

# Niet- und Warzeinsätze als Satz
## RIVET SQUEEZER - AND DIMPLE DIE KITS

**Nieteinsätze** / RIVET SQUEEZER SETS




**Schaftdurchmesser 4,76 mm**
SHANK DIA 3/16" (.187)

**Artikel-Nr. /** PART NO.:

**108A-33PC**

**Inhalt des Satzes /** CONTENTS OF THE KIT:

**1 Aufbewahrungskasten mit beschrifteteter Steckplatte**
**5 Nieteinsätze, flach mit 12,7 mm Durchmesser**
**5 Nieteinsätze, flach mit 9,53 mm Durchmesser**
**23 Nieteinsätze, Universal-Rundkopf in verschiedenen Längen.**
**Für Nietdurchm. 2,4 mm, 3,2 mm, 4,0 mm, 4,8 mm, 6,35 mm**

1 KIT BOX WITH ENGRAVED KIT PLATE
5 RIVET SETS, FLUSH, DIAMETER 1/2"
5 RIVET SETS, FLUSH, DIAMETER 3/8"
23 RIVET SETS, CUPPED TYPE, IN DIFFERENT LENGTH,
FOR RIVET DIAMETER 3/32", 1/8", 5/32", 3/16" & 1/4"

**Warz-Einsätze** / DIMPLE DIES

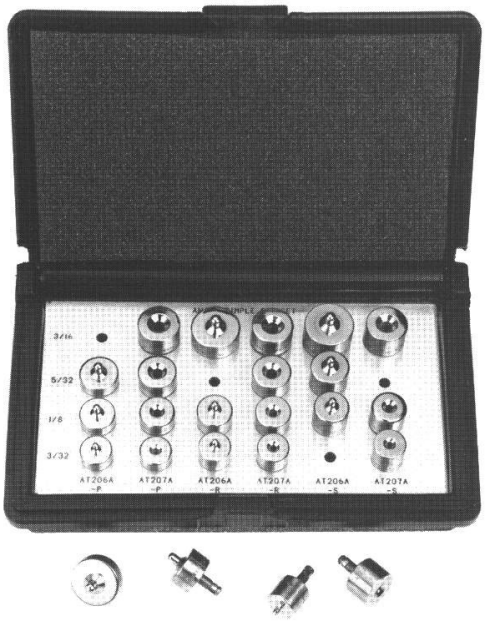


**Schaftdurchmesser 4,76 mm**
SHANK DIA 3/16" (.187)

**Artikel-Nr. /** PART NO.:

**206A-24PC**

**Inhalt des Satzes /** CONTENTS OF THE KIT:

**1 Aufbewahrungskasten mit beschrifteteter Steckplatte**
**12 Paar Warzeinsätze,**
**in 3 Nutzlängen 6,35 mm, 9,53 mm, 12,7 mm.**
**Für Nietdurchm. 2,4 mm, 3,2 mm, 4,0 mm, 4,8 mm, 6,35 mm**

1 KIT BOX WITH ENGRAVED KIT PLATE
12 PAIR MALE & FEMALE DIMPLE DIES,
WITH BODY LENGTH 1/4", 3/8" AND 1/2"
FOR RIVET DIAMETER 3/32", 1/8", 5/32", 3/16" & 1/4"

## **Pneumatische Nietfräse** / PNEUMATIC RIVET SHAVER

**Standard Ausführung, verstellbar in Stufen von 0,0127 mm, 15000 UPM (Fräser UPM),Gewinde 1/4"-28**
STANDARD DUTY, ADJUSTEMENT IN .0005" INCREMENTS, 15000 RPM (CUTTER RPM), THREAD 1/4"-28



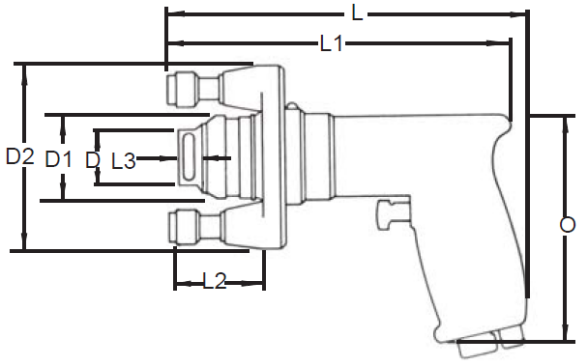


| **Artikel-Nr.** **Part No.** | Fräsergröße Cutter Capacity | Gewicht Weight | **D (max)** | **D1** | **D2** | **L** | **L1** | **L2** | **L3** | **O** |
|---|---|---|---|---|---|---|---|---|---|---|
| **ZT 706** | 15,88 mm **5/8"** | 1,4 kg **3 lbs.** | 28,6 mm **1.1/8"** | 38,1 mm **1.1/2"** | 102 mm **4"** | 190 mm **7.1/2"** | 162 mm **6.3/8"** | 47,6 mm **1.7/8"** | 9,53 mm **3/8"** | 124 mm **4.7/8"** |
| **ZT 706E** | 15,88 mm **5/8"** | 1,4 kg **3 lbs.** | 28,6 mm **1.1/8"** | 38,1 mm **1.1/2"** | 102 mm **4"** | 199 mm **7.13/16"** | 173 mm **6.13/16"** | 57,2 mm **2.1/4"** | 22,2 mm **7/8"** | 124 mm **4.7/8"** |

## **Pneumatische Nietfräse** / PNEUMATIC RIVET SHAVER

**Schwere Ausführung, verstellbar in Stufen von 0,0127 mm, 20000 UPM (Fräser UPM), Gewinde 1/4"-28**
HEAVY DUTY, ADJUSTEMENT IN .0005" INCREMENTS, 20000 RPM (CUTTER RPM), THREAD 1/4"-28



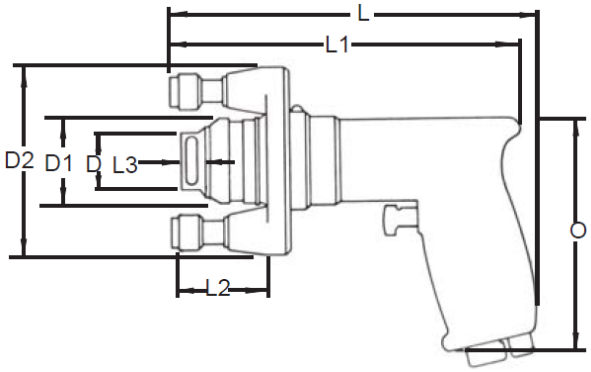


| **Artikel-Nr.** **Part No.** | Fräsergröße Cutter Capacity | Gewicht Weight | **D (max)** | **D1** | **D2** | **L** | **L1** | **L2** | **L3** | **O** |
|---|---|---|---|---|---|---|---|---|---|---|
| **ZT 405** | 31,75 mm **1.1/4"** | 1,6 kg **3.1/2 lbs.** | 34,9 mm **1.3/8"** | 44,5 mm **1.3/4"** | 102 mm **4"** | 197 mm **7.3/4"** | 176 mm **6.7/8"** | 44,5 mm **1.3/4"** | 9,53 mm **3/8"** | 130 mm **5.1/8"** |
| **ZT 405E** | 31,75 mm **1.1/4"** | 1,6 kg **3.1/2 lbs.** | 34,9 mm **1.3/8"** | 44,5 mm **1.3/4"** | 102 mm **4"** | 206 mm 8.1/8“ | 184 mm 7.1/4“ | 57,2 mm 2.1/4“ | 22,2 mm 7/8“ | 130 mm 5.1/8 |

**Spänekörbe und Stabilisatoren sind Sonderzubehör - Bitte extra bestellen.**
Skirts and Stabilizer Assemblies are available as accessories - specify at time of order.

**Stabilisator** Stabilizer Assembly



| **Für Modell Nr.** For Model No. | **Artikel Nr. für Stabilisator** Part No. for Stabilizer |
|---|---|
| **ZT 706** | **ZT 306055** |
| **ZT 706E** | **ZT 306060** |
| **ZT 405** | **ZT 405016** |
| **ZT 405E** | **ZT 405040** |

| **Fräser-Größe** Cutter Size | 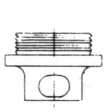 **ZT 706** | 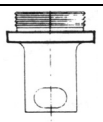 **ZT 706E** | 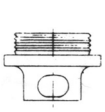 **ZT 405** | 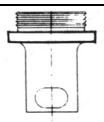 **ZT 405E** |
|---|---|---|---|---|
| | **Artikel-Nr. Spänekorb** SKIRT PART NO. | | | |
| **1/4"** | **ZT 306020** | **ZT 306040** | | |
| **5/16"** | **ZT 306021** | **ZT 306041** | | |
| **3/8"** | **ZT 306022** | **ZT 306042** | **ZT 405022** | **ZT 405052** |
| **7/16"** | **ZT 306023** | **ZT 306043** | **ZT 405023** | **ZT 405053** |
| **1/2"** | **ZT 306024** | **ZT 306044** | **ZT 405024** | **ZT 405054** |
| **9/16"** | **ZT 306025** | **ZT 306045** | **ZT 405025** | **ZT 405055** |
| **5/8"** | **ZT 306026** | **ZT 306046** | **ZT 405026** | **ZT 405056** |
| **3/4"** | | | **ZT 405027** | **ZT 405057** |
| **7/8"** | | | **ZT 405028** | **ZT 405058** |
| **1"** | | | **ZT 405029** | **ZT 405059** |
| **1.1/8"** | | | **ZT 405030** | **ZT 405060** |
| **1.1/4"** | | | **ZT 4050110** | **N/A** |

# **Pneumatische Nietfräse /** PNEUMATIC RIVET SHAVER



**SRS10P21-8**



**SRS10S21-8**

**Standard Zubehör / STANDARD EQUIPMENT**

Stützfuß / STABILIZER
Spänekorb / SKIRT 1/2" (12,7 mm) *

* falls nicht anders angegeben / If not other specified

| | |
|---|---|
| Gewindeaufname / INTERNAL THREAD | **1/4"-28** |
| Luftdruck / AIR PRESSURE | 6,2 Bar / 90 psi |
| Leistung / POWER | **1.0 HP / 0,75 kw** |
| max. Luftverbrauch / MAX .AIR CONSUMPTION | 12 l/s / 25 cfm |
| max. Drehzahl / MAX. SPEED | **21000 UpM / rpm** |
| Gewicht / WEIGHT **(SRS10P)** | 1,2 kg / 2,7 lbs |
| Gewicht / WEIGHT **(SRS10S)** | 1,1 kg / 2,5 lbs |
| Luftanschluß / AIR INLET | 1/4 NPT |

| Artikel Nr.<br>Part No. | Artikel Nr.<br>Part No. | Fräser-Durchmesser<br>Cutter Diameter | | | <br>Spänekorb<br>SKIRT | <br>Fräser<br>CUTTER |
|---|---|---|---|---|---|---|
| Pistolen-Griff<br>PISTOL GRIP | Gerade-Ausführung<br>INLINE | Inch | mm | | Artikel Nr.<br>Part No. | Artikel Nr.<br>Part No. |
| **SRS10P21-5** | **SRS10S21-5** | 5/16 | 7,94 | | 2925-5 | ZT108-1 |
| **SRS10P21-6** | **SRS10S21-6** | 3/8 | 9,53 | | 2925-6 | ZT108-2 |
| **SRS10P21-7** | **SRS10S21-7** | 7/16 | 11,11 | | 2925-7 | ZT108-3 |
| **SRS10P21-8** | **SRS10S21-8** | 1/2 | 12,70 | | 2925-8 | ZT108-4 |
| **SRS10P21-9** | **SRS10S21-9** | 9/16 | 14,29 | | 2925-9 | ZT108-5 |
| **SRS10P21-10** | **SRS10S21-10** | 5/8 | 15,88 | | 2925-10 | ZT108-6 |
| **SRS10P21-12** | **SRS10S21-12** | 3/4 | 19,05 | | 2925-12 | ZT108-7 |



**590L**

## Pneumatische Nietfräse mit Zubehör im Koffer

PNEUMATIC RIVET SHAVER KIT

**Inhalt / CONTENS:**
1 Nietfräse / RIVET SHAVER SRS10P21
inkl. Stützfuß / inkl. STABILIZER
7 Spänekörbe / Skirts (5/16", 3/8", 7/16", 1/2", 9/16", 5/8", 3/4")
7 Fräser / Cutter (5/16", 3/8", 7/16", 1/2", 9/16", 5/8", 3/4")

Artikel Nr. / PART NO.: **590L**

# Pneumatische Nietfräse mit 102 mm langem Spänekorb
# PNEUMATIC RIVET SHAVER WITH 4" EXTENDED SKIRT



| Artikel.Nr. Part No. | max. Fräsergröße Cutter Capacity | Gewicht Weight | Länge Length | Fräsergeschwindigkeit Cutter Speed | | Cutter Capacity Fräsergröße | Skirt No. Spänekorb Nr. |
|---|---|---|---|---|---|---|---|
| **7387-RSE** | 12,70 mm **1/2"** | 1,3 kg **2.87 lbs.** | 273 mm **10.3/4"** | **18000 RPM/UPM** | | **5/16"** / 7,94 mm<br>**3/8"** / 9,53 mm<br>**1/2"** / 12,70 mm | **3692**<br>**3693**<br>**3694** |

**Die Nietfräse wird, falls nicht anders angebenen, mit Standard-Spänekorb für 1/2" Fräser geliefert !**
THE RIVET SHAVER COMES WITH STANDARD SKIRT FOR 1/2" CUTTERS, IF NOT OTHER SPECIFIED!



## Planfräser, hartmetallbestückt
## CUTTER, CARBIDE TIPPED

| **Gewinde/Thread 1/4"-28** | | | **Gewinde/Thread 1/4"-26** (Für/For DESOUTTER ) |
|---|---|---|---|
| **Fräser-Durchmesser** CUTTER DIAMETER | | **Fräser - Artikel-Nr.** CUTTER - PART NO. | **Fräser - Artikel-Nr.** CUTTER - PART NO. |
| **Inch** | **mm** | | |
| **1/4"** | 6,35 | **ZT 108-0** | |
| **5/16"** | 7,94 | **ZT 108-1** | **HP-5/16" x 1/4"-26** |
| **3/8"** | 9,53 | **ZT 108-2** | **HP-3/8" x 1/4"-26** |
| **7/16"** | 11,11 | **ZT 108-3** | **HP-7/16" x 1/4"-26** |
| **1/2"** | 12,70 | **ZT 108-4** | **HP-1/2" x 1/4"-26** |
| **9/16"** | 14,29 | **ZT 108-5** | |
| **5/8"** | 15,88 | **ZT 108-6** | |
| **3/4"** | 19,05 | **ZT 108-7** | |
| **7/8"** | 22,23 | **ZT 108-8** | |
| **1"** | 25,40 | **ZT 108-9** | |
| **1.1/8"** | 28,58 | **ZT 108-10** | |
| **1.1/4"** | 31,75 | **ZT 108-11** | |

# **Pneumatische Schweißnahtfräse /** PNEUMATIC WELD SHAVER

**Zur Bearbeitung von Titan, Edelstahl, Monel und ähnlich hochfestem Material**
**Tiefeneinstellung in Stufen von 0,0254 mm. Fräser-Umdrehungen ca. 2700 UPM**
FOR USE ON TITANIUM, STAINLESS STEEL, MONEL AND SIMILAR HIGH STRENGTH MATERIALS
DEPTH ADJUSTMENT IN INCREMENTS OF .001", CUTTER ROTATION APPR. 2700 RPM

## ZT 708

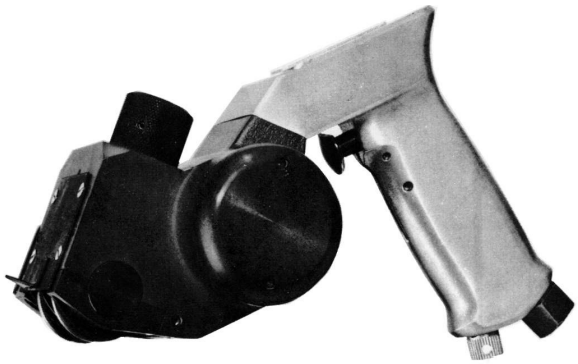

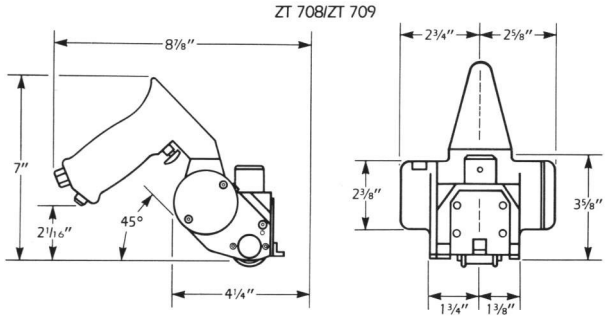


**ca. 2,7 kg / appr. 6 lbs.**

**Entfernt Schweißnähte flächenbündig, oder in einer fest eingestellten Höhe.**
**Fräst Schweißnähte bis 22,3 mm Breite und 0,8 mm Höhe in einem Arbeitsgang.**
REMOVE WELDS TO SURFACE PLANE OR TO A PRE-SELECTED HEIGHT.
SHAVE WELDS UP TO 7/8" WIDE BY 0.030 INCHES WITH ONE PASS.

**Kpl. Rollenführung und Fräser gehören nicht zum Lieferumfang. Bitte bei Bedarf mitbestellen.**
ROLLER ASSEMBLY AND CUTTERS ARE NOT FURNISHED WITH THE MACHINE. PLEASE SPECIFY AT TIME OF ORDER.

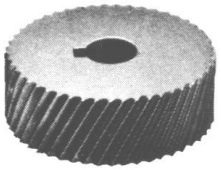

## ZT 708
## Hartmetall-Walzenfräser ohne Spanbrecher
## CARBIDE CUTTER WITHOUT CHIPBREAKER

| **Artikel-Nr.** PART NO. | **Durchmesser** DIAMETER | **Fräser Stärke** CUTTER WIDTH | **Zähne** TEETH | **Art. Nr. Rollenführung komplett** PART NO. ROLLER SHAFT ASSY |
|---|---|---|---|---|
| **ZT 508-20B** | **1.1/2"** (38,10 mm) | **1/2"** (12,70 mm) | **49** | **ZT 709041** |
| **ZT 508-21B** | **1.1/2"** (38,10 mm) | **3/4"** (19,05 mm) | **49** | **ZT 709042** |
| **ZT 508-22B** | **1.1/2"** (38,10 mm) | **3/8"** (9,53 mm) | **49** | **ZT 709040** |

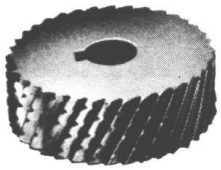

## ZT708
## Hartmetall-Walzenfräser mit Spanbrecher
## CARBIDE CUTTER WITH CHIPBREAKER

| **Artikel-Nr.** PART NO. | **Durchmesser** DIAMETER | **Fräser Stärke** CUTTER WIDTH | **Zähne** TEETH | **Art. Nr. Rollenführung komplett** PART NO. ROLLER SHAFT ASSY |
|---|---|---|---|---|
| **ZT 508-26B** | **1.1/2"** (38,10 mm) | **1/2"** (12,70 mm) | **49** | **ZT 709041** |
| **ZT 508-27B** | **1.1/2"** (38,10 mm) | **3/4"** (19,05 mm) | **49** | **ZT 709042** |
| **ZT 508-28B** | **1.1/2"** (38,10 mm) | **3/8"** (9,53 mm) | **49** | **ZT 709040** |
| **ZT 508-29B** | **1.1/2"** (38,10 mm) | **5/8"** (15,88 mm) | **49** | **ZT 709098** |
| **ZT 508-30B** | **1.1/2"** (38,10 mm) | **3/8"** (9,53 mm) | **65** | **ZT 709040** |
| **ZT 508-35B** | **1.1/2"** (38,10 mm) | **3/8"** (9,53 mm) | **36** | **ZT 709040** |
| **ZT 508-36B** | **1.1/2"** (38,10 mm) | **1/2"** (12,70 mm) | **36** | **ZT 709041** |
| **ZT 508-37B** | **1.1/2"** (38,10 mm) | **3/4"** (19,05 mm) | **36** | **ZT 709042** |
| **ZT 508-38B** | **1.1/2"** (38,10 mm) | **15/16"** (23,81 mm) | **49** | **ZT 708031** |
| **ZT 708-20B** | **1.1/2"** (38,10 mm) | **1"** (25,40 mm) | **49** | **ZT 709043** |

# **Pneumatische Schweißnahtfräse /** PNEUMATIC WELD SHAVER

**Zur Bearbeitung von Aluminium, Magnesium, Kupfer und ähnlich weiche Metalle**
**Tiefeneinstellung in Stufen von 0,0254 mm. Fräser-Umdrehungen ca. 13500 UPM**
FOR USE ON ALUMINUM, MAGNESIUM, COPPER AND SOFTER ALLOYS
DEPTH ADJUSTMENT IN INCREMENTS OF .001", CUTTER ROTATION APPR. 13500 RPM

## ZT 709

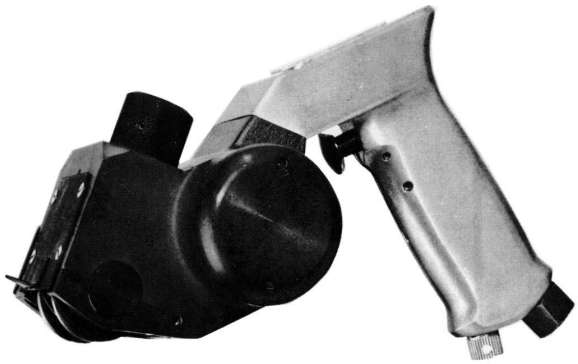

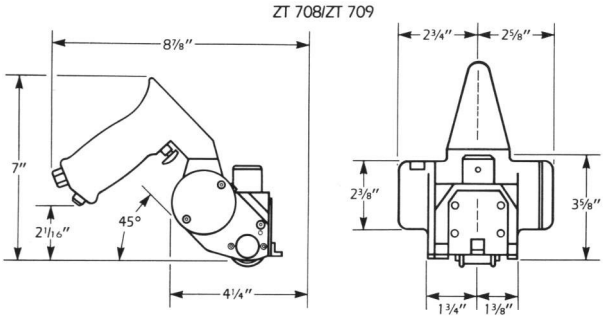


**ca. 2,7 kg / appr. 6 lbs.**

**Entfernt Schweißnähte flächenbündig, oder in einer fest eingestellten Höhe.**
**Fräst Schweißnähte bis 22,3 mm Breite und 3,18 mm Höhe in einem Arbeitsgang, sowie Keilnuten.**
REMOVE WELDS TO SURFACE PLANE OR TO A PRE-SELECTED HEIGHT.
SHAVE WELDS UP TO 7/8" WIDE BY 0.125 INCHES WITH ONE PASS AND ALSO GROOVES.

**Kpl. Rollenführung und Fräser gehören nicht zum Lieferumfang. Bitte bei Bedarf mitbestellen.**
ROLLER ASSEMBLY AND CUTTERS ARE NOT FURNISHED WITH THE MACHINE. PLEASE SPECIFY AT TIME OF ORDER.

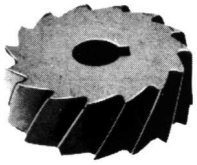

## ZT 709 Walzenfräser CUTTER

| **Artikel-Nr.** PART NO. | **Fräser/**CUTTER **MATERIAL** | **Durchmesser** DIAMETER | **Fräser Stärke** CUTTER WIDTH | **Zähne** TEETH | **Rollenführung kpl.** ROLLER SHAFT ASSY **Art. Nr.** / PART NO. |
|---|---|---|---|---|---|
| **ZT 509-20** | **H.S.S.** | **1.1/2"** (38,10 mm) | **1/2"** (12,70 mm) | **15** | **ZT 709041** |
| **ZT 509-21** | **H.S.S.** | **1.1/2"** (38,10 mm) | **3/4"** (19,05 mm) | **15** | **ZT 709042** |
| **ZT 509-22B** | **VHM** / CARBIDE | **1.1/2"** (38,10 mm) | **1/2"** (12,70 mm) | **15** | **ZT 709041** |
| **ZT 509-23B** | **VHM** / CARBIDE | **1.1/2"** (38,10 mm) | **3/4"** (19,05 mm) | **15** | **ZT 709042** |
| **ZT 509-24** | **H.S.S.** | **1.1/2"** (38,10 mm) | **3/8"** (9,53 mm) | **15** | **ZT 709040** |
| **ZT 509-25B** | **VHM** / CARBIDE | **1.1/2"** (38,10 mm) | **3/8"** (9,53 mm) | **15** | **ZT 709040** |
| **ZT 509-32B** | **VHM** / CARBIDE | **1.1/2"** (38,10 mm) | **5/8"** (15,88 mm) | **15** | **ZT 709098** |
| **ZT 509-37B** | **VHM** / CARBIDE | **1.1/2"** (38,10 mm) | **1/2"** (12,70 mm) | **10** | **ZT 709041** |
| **ZT 509-38B** | **VHM** / CARBIDE | **1.1/2"** (38,10 mm) | **1"** (25,40 mm) | **15** | **ZT 709043** |
| **ZT 509-39B** | **VHM** / CARBIDE | **1.1/2"** (38,10 mm) | **3/4"** (19,05 mm) | **8** | **ZT 709042** |

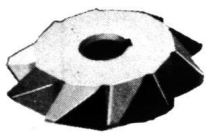

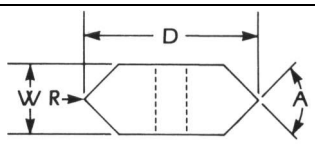


## ZT 709 Nutenfräser GROOVE -CUTTER

| **Artikel-Nr.** PART NO. | **Fräser/**CUTTER **MATERIAL** | **Durchmesser** DIAMETER | **Fräser Stärke** CUTTER WIDTH | **Winkel** Angel | **Radius** | **Zähne** TEETH | **Rollenführung kpl.** ROLLER SHAFT ASSY **Art. Nr.** / PART NO. |
|---|---|---|---|---|---|---|---|
| **ZT 509-33** | **H.S.S.** | **1.1/2"** (38,10 mm) | **1/2"** (12,70 mm) | **75°** | **.046"** 1,17 mm | **10** | **ZT 709041** |
| **ZT 509-36B** | **HM-bestückt** CARBIDE TIP | **1.906"** (48,41 mm) | **1/2"** (12,70 mm) | **60°** | **.062"** 1,57 mm | **6** | **ZT 709041** |
| **ZT 509-45B** | **HM-bestückt** CARBIDE TIP | **1.687"** (42,85 mm) | **1/2"** (12,70 mm) | **88°** | **.062"** 1,57 mm | **6** | **ZT 709041** |

# **Pneumatische Walzenfräse /** PNEUMATIC SUPER SHAVER

**Zur Bearbeitung von Titan, Edelstahl, Monel und ähnlichen hochfesten Nieten**
**Tiefeneinstellung in Stufen von 0,0127 mm. Fräser-Umdrehungen ca. 12000 UPM**
FOR USE ON TITANIUM, STAINLESS STEEL, MONEL AND SIMILAR HIGH STRENGTH FASTENERS
DEPTH ADJUSTMENT IN INCREMENTS OF .0005", CUTTER ROTATION APPR. 12000 RPM

## ZT 507 C

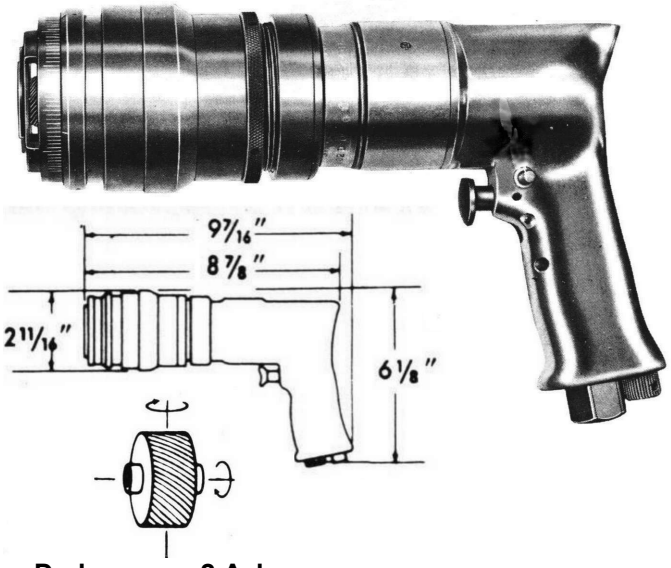


**Drehung um 2 Achsen**
Dual Rotating

**STABILISATOR**
STABILIZER

**ZT 507053**

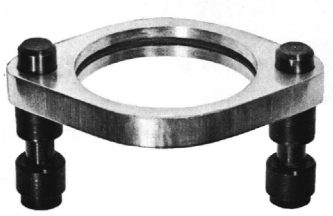

**Fräser, Fräserwelle, Fußstück und Stabilisator gehören nicht zum Lieferumfang. Bitte bei Bedarf mitbestellen.**

Cutter, Cutter-Shaft, Footpiece and Stabilizer are not furnished with the machine.
If required, specify at time of order.

| **Fräser Stärke** CUTTER WIDTH | **Art. Nr. Fräserwelle, komplett** PART NO. CUTTER SHAFT ASSY | **Art. Nr. Stahl-Fußstück** PART NO. STEEL FOOTPIECE | **Art. Nr. Nylon Fußstück** PART NO. NYLON FOOTPIECE |
|---|---|---|---|
| **3/8"** / 9,53 mm | **ZT 5070171** | **ZT 507084** | |
| **7/16"** / 11,11 mm | **ZT 5070172** | **ZT 507084** | |
| **1/2"** / 12,70 mm | **ZT 5070173** | **ZT 507029** | **ZT 507041** |
| **3/4"** / 19,05 mm | **ZT 5070174** | **ZT 507035** | **ZT 507055** |

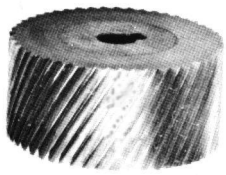

# **Hartmetall-Walzenfräser**

# CARBIDE CUTTER

| **Artikel-Nr.** PART NO. | **Fräser Stärke** CUTTER WIDTH | **Zähne** TEETH | **Durchmesser** DIAMETER | **Spanbrecher** CHIP BREAKER | **Anwendungsbereich** APPLICATION |
|---|---|---|---|---|---|
| **ZT 507-20B** | **1/2" /** 12,70 mm | **49** | **1.1/8"** (28.58 mm) | NEIN / NO | Monel, Steel, Titanium |
| **ZT 507-21B** | **3/4" /** 19,05 mm | **49** | **1.1/8"** (28.58 mm) | NEIN / NO | Monel, Steel, Titanium |
| **ZT 507-22B** | **1/2" /** 12,70 mm | **25** | **1.1/8"** (28.58 mm) | NEIN / NO | Monel, Steel, Titanium, Jo-Bolt |
| **ZT 507-23B** | **3/8" /** 9,53 mm | **49** | **1.1/8"** (28.58 mm) | NEIN / NO | Monel, Steel, Titanium |
| **ZT 507-24B** | **1/2" /** 12,70 mm | **37** | **1.1/8"** (28.58 mm) | JA / YES | NACA, Straylar Rivet, Aluminum, Jo-Bolt |
| **ZT 507-25B** | **3/4" /** 19,05 mm | **37** | **1.1/8"** (28.58 mm) | JA / YES | NACA, Straylar Rivet, Aluminum, Jo-Bolt |
| **ZT 507-26B** | **3/8" /** 9,53 mm | **37** | **1.1/8"** (28.58 mm) | JA / YES | NACA, Straylar Rivet, Aluminum, Jo-Bolt |
| **ZT 507-27B** | **1/2" /** 12,70 mm | **25** | **1.1/8"** (28.58 mm) | NEIN / NO | A-286 Stainless Steel Rivet |
| **ZT 507-28B** | **3/4"/** 19,05 mm | **25** | **1.1/8"** (28.58 mm) | NEIN / NO | A-286 Stainless Steel Rivet |
| **ZT 507-29B** | **7/16"/**11,11 mm | **49** | **1.1/8"** (28.58 mm) | NEIN / NO | Monel, Steel, Titanium |

# Leichte pneumatische Schweißnahtfräse
# LIGHT DUTY PNEUMATIC WELD SHAVER

**Zur Bearbeitung von Aluminium, Magnesium, Kupfer und ähnlich weichen Metallen**
**Tiefeneinstellung in Stufen von 0,0127 mm. Fräser-Umdrehungen ca. 15000 UPM**
FOR USE ON ALUMINUM, MAGNESIUM, COPPER AND SOFTER ALLOYS
DEPTH ADJUSTMENT IN INCREMENTS OF .0005" CUTTER ROTATION APPR. 15000 RPM

## ZT 550

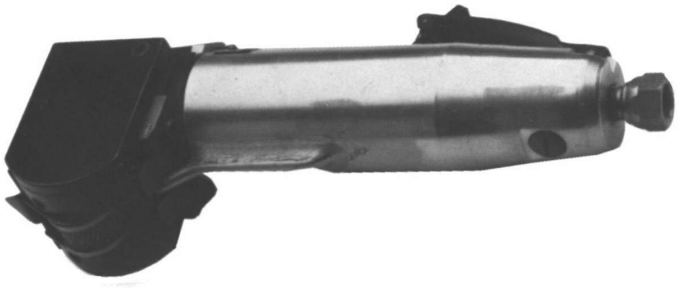

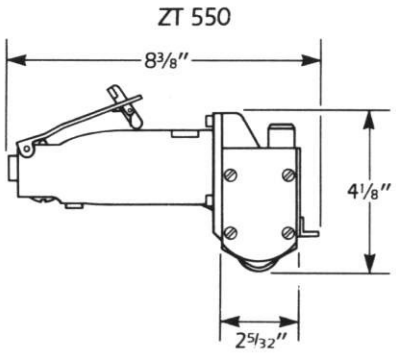


**ca. 1,7 kg / appr. 3.3/4 lbs.**

**Entfernt Schweißnähte flächenbündig, oder in einer fest eingestellten Höhe.**
**Fräst Schweißnähte bis 12,7 mm Breite, sowie Keilnuten bis 9,53 mm Breite.**
REMOVE WELDS TO SURFACE PLANE OR TO A PRE-SELECTED HEIGHT.
SHAVE WELDS UP TO 1/2" WIDE AND GROOVES UP TO 3/8".

**Kpl. Rollenführung und Fräser gehören nicht zum Lieferumfang. Bitte bei Bedarf mitbestellen.**
ROLLER ASSEMBLY AND CUTTERS ARE NOT FURNISHED WITH THE MACHINE. PLEASE SPECIFY AT TIME OF ORDER.



## ZT 550
## Walzenfräser
## CUTTER

| **Artikel-Nr.** PART NO. | **Fräser**/CUTTER **MATERIAL** | **Durchmesser** DIAMETER | **Fräser Stärke** CUTTER WIDTH | **Zähne** TEETH | **Rollenführung kpl.** ROLLER SHAFT ASSY **Art. Nr.** / PART NO. |
|---|---|---|---|---|---|
| **ZT 550-21** | **H.S.S.** | **1.1/8"** (28,58 mm) | **3/8"** (9,53 mm) | **10** | **ZT 550069** |
| **ZT 550-23** | **H.S.S.** | **1.1/8"** (28,58 mm) | **1/2"** (12,70 mm) | **10** | **ZT 550070** |
| **ZT 550-30** | **VHM** / CARBIDE | **1.1/8"** (28,58 mm) | **1/4"** (6,35 mm) | **10** | **ZT 550069** |
| **ZT 550-31** | **VHM** / CARBIDE | **1.1/8"** (28,58 mm) | **3/8"** (9,53 mm) | **10** | **ZT 550069** |
| **ZT 550-32** | **VHM** / CARBIDE | **1.1/8"** (28,58 mm) | **1/2"** (12,70 mm) | **10** | **ZT 550070** |



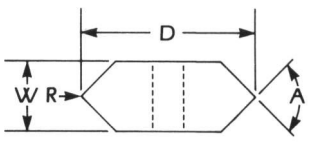


## ZT 550
## Nutenfräser
## GROOVE -CUTTER

| **Artikel-Nr.** PART NO. | **Fräser**/CUTTER **MATERIAL** | **Durchmesser** DIAMETER | **Fräser Stärke** CUTTER WIDTH | **Winkel** Angel | **Radius** | **Zähne** TEETH | **Rollenführung kpl.** ROLLER SHAFT ASSY **Art. Nr.** / PART NO. |
|---|---|---|---|---|---|---|---|
| **ZT 550-29** | **H.S.S.** | **1.5/16"** (33,34 mm) | **3/8"** (9,53 mm) | **60°** | **.062"** 1,57 mm | **6** | **ZT 550069** |
| **ZT 550-40** | **H.S.S.** | **1.31/64"** (37,70 mm) | **3/8"** (9,53 mm) | **40°** | **.062"** 1,57 mm | **8** | **ZT 550069** |
| **ZT 550-41** | **H.S.S.** | **1.5/16"** (33,34 mm) | **3/8"** (9,53 mm) | **40°** | **.062"** 1,57 mm | **6** | **ZT 550069** |

# Leichte pneumatische Schweißnahtfräse
# LIGHT DUTY PNEUMATIC WELD SHAVER

**Zur Bearbeitung von Titan, Edelstahl, Monel und ähnlich hochfestem Material**
**Tiefeneinstellung in Stufen von 0,0127 mm Fräser-Umdrehungen ca. 3500 UPM**
FOR USE ON TITANIUM, STAINLESS STEEL, MONEL AND SIMILAR HIGH STRENGTH MATERIALS
DEPTH ADJUSTMENT IN INCREMENTS OF .0005", CUTTER ROTATION APPR. 3500 RPM

## ZT 553

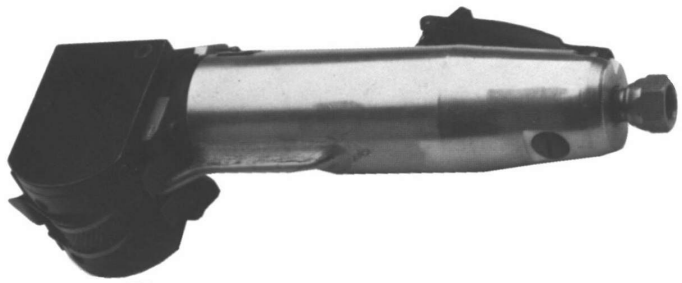

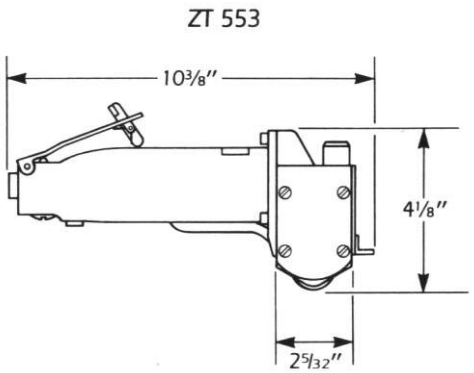


**ca. 2,3 kg / appr. 5 lbs.**

**Entfernt Schweißnähte flächenbündig, oder in einer fest eingestellten Höhe.**
**Fräst Schweißnähte bis 12,7 mm Breite.**
REMOVE WELDS TO SURFACE PLANE OR TO A PRE-SELECTED HEIGHT.
SHAVE WELDS UP TO 1/2" WIDE.

**Kpl. Rollenführung und Fräser gehören nicht zum Lieferumfang. Bitte bei Bedarf mitbestellen.**
ROLLER ASSEMBLY AND CUTTERS ARE NOT FURNISHED WITH THE MACHINE. PLEASE SPECIFY AT TIME OF ORDER.

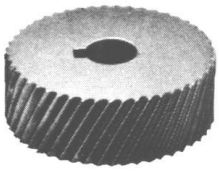

## ZT 553
## Hartmetall-Walzenfräser ohne Spanbrecher
## CARBIDE CUTTER WITHOUT CHIPBREAKER

| **Artikel-Nr.** PART NO. | **Fräser/**CUTTER **MATERIAL** | **Durchmesser** DIAMETER | **Fräser Stärke** CUTTER WIDTH | **Zähne** TEETH | **Rollenführung kpl.** ROLLER SHAFT ASSY **Art. Nr.** / PART NO. |
|---|---|---|---|---|---|
| **ZT 553-26** | **VHM** / CARBIDE | **1.1/8"** (28,58 mm) | **1/2"** (12,70 mm) | **34** | **ZT 550070** |
| **ZT 553-28** | **VHM** / CARBIDE | **1.1/8"** (28,58 mm) | **3/8"** (9,53 mm) | **34** | **ZT 550069** |

# Senk-Anschlaghalter für Drehzahlen bis max. 3000 UPM
MICRO-STOP-COUNTERSINKS FOR SPEEDS UP TO 3000 RPM

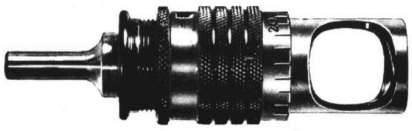

**Länge** / LENGTH 83 mm / **3.1/4"**
**Verstellbar** / INCREMENTS 0.025 mm/ **0.001"**
**max. Hub** / MAX. TRAVEL 7,14 mm / **9/32"**
**Schaftdurchm.** / SPINDLE DIA 6,35 mm / **1/4"**
**Gewinde.** / THREAD **1/4-28“**

**Spänekörbe** / SKIRTS



| **Art** / TYPE : | **S** | **W** | **SP** | **WP** |
|---|---|---|---|---|
| **Art.Nr.** / PART NO.: | **ZT33004** | **ZT330015** | **ZT33005 *** | **ZT330013 *** |

*** Ohne Stahl-/ oder Nylon-Ring / Without Steel-/or Nylon-Footplate**

| **Art**<br>**TYPE** | **Artikel-Nr.**<br>PART-NO. | **Gewinde**<br>THREAD | **max. Senkergröße**<br>MAX. CUTTER DIA | **Art des Spänekorbs**<br>TYPE OF SKIRT |
|---|---|---|---|---|
| | | | | |
| **S** | **ZT 330-S** | **1/4"-28** | 15,87 mm / **5/8"** | **Standard, Stahl** / STANDARD, STEEL |
| **W** | **ZT 330-W** | **1/4"-28** | 19,05 mm / **3/4"** | **Glockenform, Stahl** / BELL-TYPE, STEEL |
| **SP** | **ZT 330-SP-S** | **1/4"-28** | 15,87 mm / **5/8"** | **Stahl-Ring** / STEEL-FOOTPLATE |
| **SP** | **ZT 330-SP-N** | **1/4"-28** | 15,87 mm / **5/8"** | **Nylon-Ring** / NYLON FOOTPLATE |
| **WP** | **ZT 330-WP-S** | **1/4"-28** | 19,05 mm / **3/4"** | **Stahl-Ring** / STEEL-FOOTPLATE |
| **WP** | **ZT 330-WP-N** | **1/4"-28** | 19,05 mm / **3/4"** | **Nylon-Ring** / NYLON FOOTPLATE |
| | | | | |
| **S** | **ZT 330-S-M6x1** | **M6 x 1** | 15,87 mm / **5/8"** | **Standard, Stahl** / STANDARD, STEEL |
| **W** | **ZT 330-W-M6x1** | **M6 x 1** | 19,05 mm / **3/4"** | **Glockenform, Stahl** / BELL-TYPE, STEEL |
| **SP** | **ZT 330-SP-S-M6x1** | **M6 x 1** | 15,87 mm / **5/8"** | **Stahl-Ring** / STEEL-FOOTPLATE |
| **SP** | **ZT 330-SP-N-M6x1** | **M6 x 1** | 15,87 mm / **5/8"** | **Nylon-Ring** / NYLON FOOTPLATE |
| **WP** | **ZT 330-WP-S-M6x1** | **M6 x 1** | 19,05 mm / **3/4"** | **Stahl-Ring** / STEEL-FOOTPLATE |
| **WP** | **ZT 330-WP-N-M6x1** | **M6 x 1** | 19,05 mm / **3/4"** | **Nylon-Ring** / NYLON FOOTPLATE |

| | **Stahl-Ring für "SP"**<br>Steel-Insert for "SP" | **Nylon-Ring für "SP"**<br>Nylon-Insert for "SP" | **Stahl-Ring für "WP"**<br>Steel-Insert for "WP" | **Nylon-Ring für "WP"**<br>Nylon-Insert for "WP" |
|---|---|---|---|---|
| **Artikel Nr.**/PART NO.: | **ZT 33006** | **ZT 330014** | **ZT 330010** | **ZT 330021** |

# Senk-Anschlaghalter für hohe Drehzahlen bis 10000 UPM
# HIGH SPEED MICROSTOP COUNTERSINKS UP TO 10000 RPM

**Für Senker mit Gewinde 1/4"-28, M6 X 1 oder M8 X 1**
FOR COUNTERSINK CUTTERS THREADED 1/4"-28, M6 X 1 OR M8 X 1



**444**

**Verstellbar** / INCREMENTS 0.0127 mm / **0.0005"**
**Max. Hub** / MAX. TRAVEL 7,94 mm / **5/16"**

- *For high volume, accurate countersinking in a production environment*
- *Full ball bearing shaft support for increased life*
- *Heavy duty ball thrust bearing ensures depth repeatability*
- *Fail-safe design accomplished with integrated shoulder on shaft*
- *Debris filter prevents chips and dust from contaminating bearings*
- *.0005" depth adjustment, 5/16" shaft travel*
- *Right-hand threaded lock nut prevents jamming of adjustment mechanism*
- *Multiple skirt configuration options*
- *Multiple shaft configuration option*

| **Artikel-Nr.** PART-NO. | **Gewinde** THREAD | **max. Senkergröße** MAX. CUTTER DIA | **Art des Spänekorbs** TYPE OF SKIRT |
|---|---|---|---|
| **444S1** | **1/4"-28** | 19,05 mm **/ 3/4"** | **Standard, Stahl** / STANDARD, STEEL |
| **444N1** | **1/4"-28** | 19,05 mm **/ 3/4"** | **Nylon-Ring** / NYLON INSERT |
| **444H1** | **1/4"-28** | 19,05 mm **/ 3/4"** | **Nylon-Ring mit Flansch** / NYLON FLANGE INSERT |
| **444S4** | **M6 X 1** | 19,05 mm **/ 3/4"** | **Standard, Stahl** / STANDARD, STEEL |
| **444N4** | **M6 X 1** | 19,05 mm **/ 3/4"** | **Nylon-Ring** / NYLON INSERT |
| **444H4** | **M6 X 1** | 19,05 mm **/ 3/4"** | **Nylon-Ring mit Flansch** / NYLON FLANGE INSERT |
| **444S6** | **M8 X 1** | 19,05 mm **/ 3/4"** | **Standard, Stahl** / STANDARD, STEEL |
| **444N6** | **M8 X 1** | 19,05 mm **/ 3/4"** | **Nylon-Ring** / NYLON INSERT |
| **444H6** | **M8 X 1** | 19,05 mm **/ 3/4"** | **Nylon-Ring mit Flansch** / NYLON FLANGE INSERT |
| **444D6** | **M8 X 1** | 25,40 mm **/ 1"** | **Glockenform, Stahl** / BELL-TYPE, STEEL |

**Auch mit Pendelschaft beziehbar**

ALSO AVAILABLE WITH SWIVEL SHANK

## Spähnekörbe / SKIRTS



**S (444S)**
Straight
3/4" Capacity



**C (444C)**
Close
5/16" Capacity



**H (444H)**
Nylon Flange Insert
3/4" Capacity



**E (444E)**
Straight Cutaway
3/4" Capacity



**D (444D)**
**Bell**
1" Capacity

**EXTENDED SKIRTS:**
2-3/4" Extension
(Includes extension shaft)



**F (444F)**
Flanged
3/4" Capacity



**W (444W)**
Flanged Bell
1" Capacity



**LA (444LA)**
10-32 Female Thread
1/4 ID X 3/8 OD



**G (444G)**
Flanged Cutaway
3/4" Capacity



**J (444J)**
.532 OD
.332 Capacity

**LB (444LB)**
1/4-28 Female Thread
5/16 ID X 7/16 OD



**B (444B)**
2-Legged
3/4" Capacity



**K (444K)**
.600 OD
.400 Capacity

**LC (444LC)**
1/4-28 Female Thread
3/8 ID X 1/2 OD



**A (444A)**
Phenolic Insert
3/4" Capacity



**N (444N)**
Nylon Insert
3/4" Capacity

**LD (444LD)**
1/4-28 Female Thread
5/8 ID X 3/4 OD

## INSERTS

**444-37P**
Phenolic
OD .960

**444-37N**
**Nylon**
OD .960

**444-37NF**
Nylon
OD 1.25



# Senk-Anschlaghalter für Drehzahlen bis max . 10000 UPM
MICRO-STOP-COUNTERSINKS FOR SPEEDS UP TO 10000 RPM

## Heavy Duty High Speed Microstop Countersink Cage



**ZT680**

- .0005" incremental depth adjustment.
- 3/4" diameter cutter capacity
- 1/4" shaft travel with 1/4"-28 internally threaded shaft.
- RATED at 10,000 rpm

Works with all standard 1/4"x28 threaded cutters up to 3/4" in diameter.

## ZT680 Footpiece Style Chart (to the part numbers below add the shaft style, QC, TF or no suffix.)

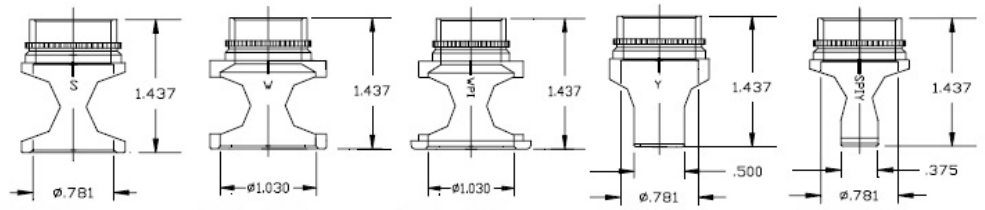


Style – S
P/N: ZT680-S-( )

Style – W
P/N: ZT680-W-( )

Style – WPI
P/N: ZT680-WPI-( )

Style – Y
P/N: ZT680-Y-( )

Style – SPIY
P/N: ZT680-SPIY-( )

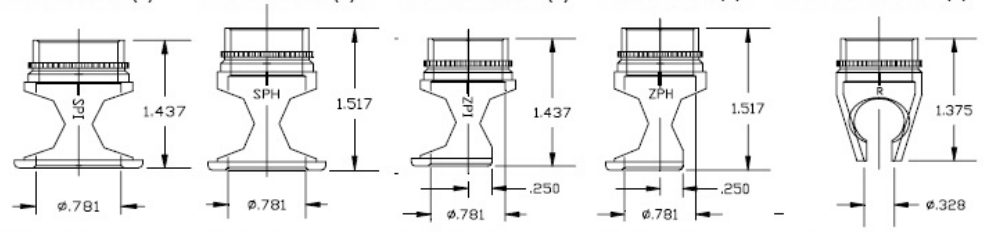


Style – SPI
P/N: ZT680-SPI-( )

Style – SPH
P/N: ZT680-SPH-( )

Style – ZPI
P/N: ZT680-ZPI-( )

Style – ZPH
P/N: ZT680-ZPH-( )

Style – R
P/N: ZT680-R-( )

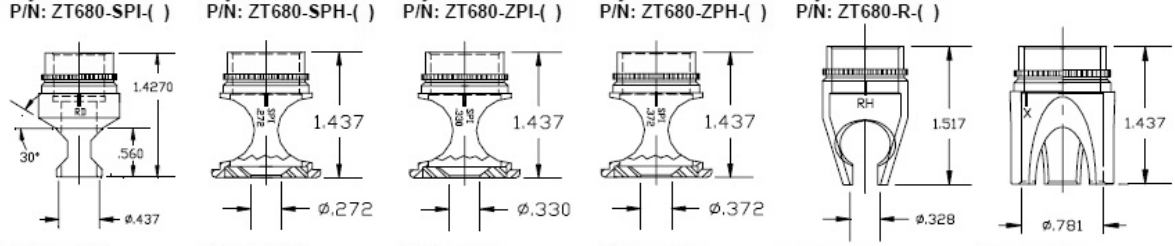


Style – RD
P/N: ZT680-RD-( )

Style – SPI
w/Chip Guard
P/N: ZT680-SPI272-( )

Style – SPI
w/Chip Guard
P/N: ZT680-SPI328-( )

Style – SPI
w/Chip Guard
P/N: ZT680-SPI372-( )

Style – RH
P/N: ZT680-RH-( )

Style – X
P/N: ZT680-X-( )

## ZT680 Extended Nose Footpiece Style Chart

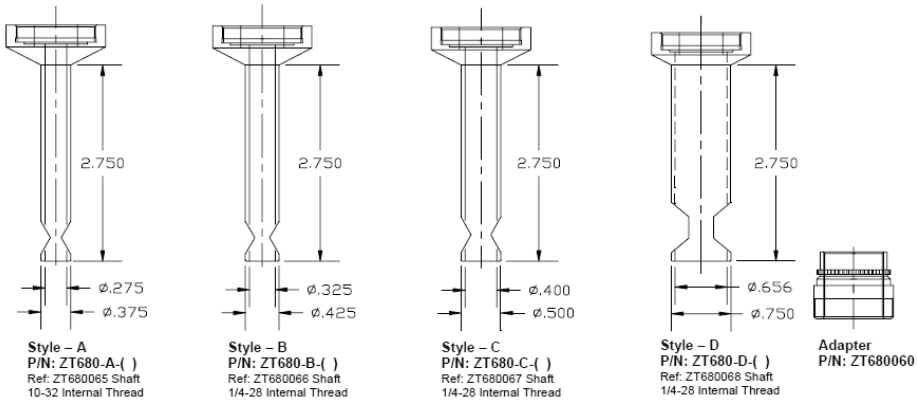


Style – A
P/N: ZT680-A-( )
Ref: ZT680065 Shaft
10-32 Internal Thread

Style – B
P/N: ZT680-B-( )
Ref: ZT680066 Shaft
1/4-28 Internal Thread

Style – C
P/N: ZT680-C-( )
Ref: ZT680067 Shaft
1/4-28 Internal Thread

Style – D
P/N: ZT680-D-( )
Ref: ZT680068 Shaft
1/4-28 Internal Thread

Adapter
P/N: ZT680060

## Vacuum Footpiece



**Style – SPV-N**
**PN: ZT680-SPV-N-( )**

**ZT6800116 Vacuum Footpiece only incl. Nylon Footplate**

## How To Select The Proper Model Number

To select the proper ZT680 model number you only need to know two (2) things, the footpiece style and the drive shaft style. The information below will help you determined both.

ZT680 - ( ) - ( )

- Shaft Styles: "QC" Quick Change, "TF" 1/4" Three Flats, No Suffix 1/4" Round
- Footpiece Styles: (see footpiece chart below)
- ZEPHYR TOOL: Heavy Duty High Speed Microstop Cage

**NOTE:** The **ZT680060** adapter and the appropiate extended shaft are included on all extended nose cage assemblies. Should you wish to convert a standard ZT680 cage to a extended nose model, you will need to order the required nosepiece, the adapter and the appropiate extended shaft separately.

**ALSO AVAILABLE WITH THREAD M6 X 1 OR M8 X 1 AND SWIVEL SHAFT**
Auch mit M6 X 1 oder M8 X 1 Gewinde sowie Pendelschaft lieferbar

## Micro-Stop Vakuum Adapter für ZT680S/-SPI
MICRO-STOP VACUUM ADAPTER FOR ZT680S/-SPI





**Capacity 1"**

**(Senkanschlaghalter gehört nicht zum Lieferumfang)**
**(MICRO-STOP IS NOT INCLUDED)**

**ArtikelNr./ PART NO.:**

**EH2012**

## Senk-Anschlaghalter für Drehzahlen bis max. 3000 UPM
MICRO-STOP-COUNTERSINKS FOR SPEEDS UP TO 3000 RPM

**JUMBO SIZE MICROSTOPS**
**FOR COUNTERSINK CUTTERS THREADED 3/8"-24 and 7/16"-20**



**432**



**462H3-1.3**

- For production environment countersinking of larger sized holes
- Fail-safe design accomplished with integrated shoulder on shaft
- All shafts feature wrenching flats to aid in removal of cutter after use
- Ball thrust bearing ensures depth repeatability

| **Artikel-Nr.** PART-NO. | **Gewinde** THREAD | **Verstellbar** INCREMENTS | **max. Senkergröße** Cutter Capacity | **Schaft** Shank | **max. Hub** MAX. TRAVEL | **Gesamtlänge** OAL |
|---|---|---|---|---|---|---|
| **432A** | 7/16”-20 | 0,025 mm / .001 | 31,75 mm / 1-1/4” | 3/8’’ Round | 19,05 mm / 3/4” | 178 mm / 7” |
| **432B** | 3/8”-24 | 0,025 mm / .001 | 31,75 mm / 1-1/4” | 3/8’’ Round | 19,05 mm / 3/4” | 178 mm / 7” |
| **462** | 3/8”-24 | 0,075 mm / .003 | 22,23 mm / 7/8” | 3/8’’ Round | 19,05 mm / 3/4” | 178 mm / 7” |

| **Artikel-Nr.** PART-NO. | **Gewinde** THREAD | **Verstellbar** INCREMENTS | **max. Senkergröße** Cutter Capacity | **Schaft** Shank | **max. Hub** MAX. TRAVEL | **Gesamtlänge** OAL |
|---|---|---|---|---|---|---|
| **462H3-1.3** | 3/8”-24 | 0,013 mm / .0005 | 31,75 mm / 1-1/4” | 3 Chuck Flat | 19,05 mm / 3/4” | 124 mm / 5” |
| **462H3-1.5** | 3/8”-24 | 0,013 mm / .0005 | 34,92 mm / 1-3/8” | 3 Chuck Flat | 19,05 mm / 3/4” | 124 mm / 5” |
| **462H7-1.3** | 7/16”-20 | 0,013 mm / .0005 | 31,75 mm / 1-1/4” | 3 Chuck Flat | 19,05 mm / 3/4” | 124 mm / 5” |
| **462H7-1.5** | 7/16”-20 | 0,013 mm / .0005 | 34,92 mm / 1-3/8” | 3 Chuck Flat | 19,05 mm / 3/4” | 124 mm / 5” |

# Senk-Anschlaghalter für Drehzahlen bis max. 3000 UPM
MICRO-STOP-COUNTERSINKS FOR SPEEDS UP TO 3000 RPM

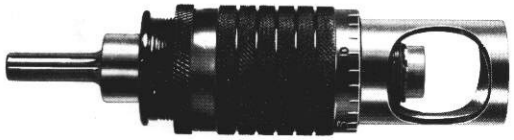

**ZT331**

**Länge** / LENGTH 151 mm / **5.15/16"**
**Verstellbar /** INCREMENTS 0.025 mm/**0.001"**
**max. Hub** / MAX. TRAVEL 12,7 mm / **1/2"**
**Schaftdurchm. /** SPINDLE DIA 7,94 mm **/ 5/16"**

**Spänekörbe** / SKIRTS



| **Art /** TYPE : | **S** | **W** | **SP** | **WP** |
|---|---|---|---|---|
| **Art.Nr.** / PART NO.: | **ZT33104** | **ZT331017** | **ZT331021 *** | **ZT331023 *** |

*** Ohne Stahl-/ oder Nylon-Ring / Without Steel-/or Nylon-Footplate**

| **Art** **TYPE** | **Artikel-Nr.** PART-NO. | **Gewinde** THREAD | **max. Senkergröße** MAX. CUTTER DIA | **Art des Spänekorbs** TYPE OF SKIRT |
|---|---|---|---|---|
| **S** | **ZT 331-S** | **3/8"-24** | 22,23 mm **/ 7/8"** | **Standard, Stahl** / STANDARD, STEEL |
| **W** | **ZT 331-W** | **3/8"-24** | 34,93 mm **/ 1.3/8"** | **Glockenform, Stahl** / BELL-TYPE, STEEL |
| **SP** | **ZT 331-SP-S** | **3/8"-24** | 22,23 mm **/ 7/8"** | **Stahl-Ring /** STEEL-FOOTPLATE |
| **SP** | **ZT 331-SP-N** | **3/8"-24** | 22,23 mm **/ 7/8"** | **Nylon-Ring /** NYLON FOOTPLATE |
| **WP** | **ZT 331-WP-S** | **3/8"-24** | 34,93 mm **/ 1.3/8"** | **Stahl-Ring /** STEEL-FOOTPLATE |
| **WP** | **ZT 331-WP-N** | **3/8"-24** | 34,93 mm **/ 1.3/8"** | **Nylon-Ring /** NYLON FOOTPLATE |

| | **Stahl-Ring für "SP"** Steel-Insert for "SP" | **Nylon-Ring für "SP"** Nylon-Insert for "SP" | **Stahl-Ring für "WP"** Steel-Insert for "WP" | **Nylon-Ring für "WP"** Nylon-Insert for "WP" |
|---|---|---|---|---|
| **Artikel Nr./**PART NO.: | **ZT 331028** | **ZT 331022** | **ZT 331029** | **ZT 331024** |

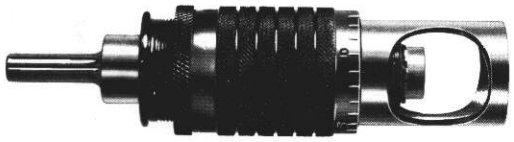

**ZT334**

**Länge** / LENGTH 151 mm / **5.15/16"**
**Verstellbar /** INCREMENTS 0.025 mm/**0.001"**
**max. Hub** / MAX. TRAVEL 12,7 mm / **1/2"**
**Schaftdurchm. /** SPINDLE DIA 7,94 mm **/ 5/16"**

**Spänekörbe** / SKIRTS



| **Art /** TYPE : | **S** | **W** | **SP** | **WP** |
|---|---|---|---|---|
| **Art.Nr.** / PART NO.: | **ZT33104** | **ZT33402** | **ZT331021 *** | **ZT33406 *** |

*** Ohne Stahl-/ oder Nylon-Ring / Without Steel-/or Nylon-Footplate**

| **Art** **TYPE** | **Artikel-Nr.** PART-NO. | **Gewinde** THREAD | **max. Senkergröße** MAX. CUTTER DIA | **Art des Spänekorbs** TYPE OF SKIRT |
|---|---|---|---|---|
| **S** | **ZT 334-S** | **7/16"-20** | 22,23 mm **/ 7/8"** | **Standard, Stahl** / STANDARD, STEEL |
| **W** | **ZT 334-W** | **7/16"-20** | 38,10 mm **/ 1.1/2"** | **Glockenform, Stahl** / BELL-TYPE, STEEL |
| **SP** | **ZT 334-SP-S** | **7/16"-20** | 22,23 mm **/ 7/8"** | **Stahl-Ring /** STEEL-FOOTPLATE |
| **SP** | **ZT 334-SP-N** | **7/16"-20** | 22,23 mm **/ 7/8"** | **Nylon-Ring /** NYLON FOOTPLATE |
| **WP** | **ZT 334-WP-N** | **7/16"-20** | 38,10 mm **/ 1.1/2"** | **Nylon-Ring /** NYLON FOOTPLATE |

| | **Stahl-Ring für "SP"** Steel-Insert for "SP" | **Nylon-Ring für "SP"** Nylon-Insert for "SP" | **Stahl-Ring für "WP"** Steel-Insert for "WP" | **Nylon-Ring für "WP"** Nylon-Insert for "WP" |
|---|---|---|---|---|
| **Artikel Nr./**PART NO.: | **ZT 331028** | **ZT 331022** | **------** | **ZT 33407** |

# Senk-Anschlaghalter für Drehzahlen bis max . 6000 UPM
MICRO-STOP-COUNTERSINKS FOR SPEEDS UP TO 6000 RPM

**High Speed Precision Microstop Cage**

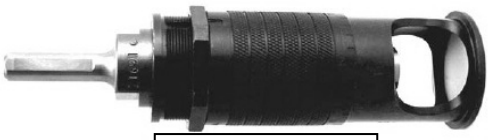

**ZT691/ZT692**

- .0005" incremental depth adjustment
- 1" to 2" cutter capacity
- Drive shafts are available with 3/8" round (no suffix), 3/8" round with three flats (-TF) recommended
- 7/16" shaft travel
- The internal thread for the ZT691 series is 3/8-24 and for the ZT692 series it is 7/16-20
- RATED at 6,000 rpm

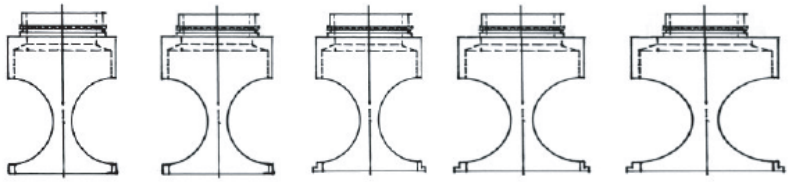


| Model Number | Shaft Thread | Footpiece OD | Footpiece ID | Overall Length | Cutter Capacity |
|---|---|---|---|---|---|
| ZT691-S-TF | 3/8-24 | 1.62 | 1.28 | 5.0 | 1.250 |
| ZT691-SPI-TF | | | | | |
| ZT691-W-TF | | 1.75 | 1.531 | | 1.500 |
| ZT691-WPI-TF | | | | | |
| ZT692-S-TF | 7/16-20 | 1.62 | 1.28 | | 1.250 |
| ZT692-SPI-TF | | | | | |
| ZT692-WPI-TF | | | | | |

# Anschlaghalter mit langem Hub
MICRO-STOP WITH LONG SHAFT TRAVEL



**EH356HPV-26,5**



**EH356HP**

**Verstellbar** / INCREMENTS 0,025 mm / **0.001“**
**Schaftdurchm.** / SPINDLE DIA 6,00 mm / **.2362**

**Mit Pendelschaft** / WITH SWIVEL SHAFT

| Model Number | Gewinde THREAD | max. Senkergröße MAX. CUTTER DIA | HUB SHAFT TRAVEL | GESAMTLÄNGE Overall Length |
|---|---|---|---|---|
| EH356HP | M6 X 1 | 17 mm / **11/16”** | 13 mm / .5188 | 130 mm / **5.1/8”** |
| EH356HP-26,5 | M6 X 1 | 25,4 mm / **1”** | 26,5 mm | 175 mm / **6.57/64”** |
| EH356HPV-26,5 incl. Vacuum-Adapter | M6 X 1 | 25,4 mm / **1”** | 26,5 mm | 175 mm / **6.57/64”** |

# Senk-Anschlaghalter mit Pendelschaft
## 5° Differenz zwischen der Spindelachse und der Senkerachse
## für hohe Drehzahlen bis 6000 UPM

HIGH SPEED MICROSTOP COUNTERSINKS WITH SWIVEL SHAFT
5° DIFFERENCE BETWEEN THE SPINDLE AXIS AND CUTTER AXIS
FOR SPEEDS UP TO 6000 RPM



**ZT666 & ZT667 & ZT668**

| | |
|---|---|
| **Länge** / LENGTH | 89 mm / **3.1/2"** |
| **Verstellbar** / INCREMENTS | 0.025 mm / **0.001"** |
| **max. Hub** / MAX. TRAVEL | 6,00 mm /**.2362"** |
| **Schaftdurchm.**/SPINDLE DIA | 6,00 mm **/ .2362"** |

**Spänekörbe** / SKIRTS





| | | |
|---|---|---|
| **Art**/TYPE : | **SP** | **WP** |
| **Art.Nr.**/PART NO. : | **ZT666016 *** | **ZT666021 *** |

*** Ohne Stahl-/ oder Nylon-Ring / Without Steel-/or Nylon-Footplate**

| **Art** **TYPE** | **Artikel-Nr.** PART-NO. | **Gewinde** THREAD | **max. Senkergröße** MAX. CUTTER DIA | **Art des Spänekorbs** TYPE OF SKIRT |
|---|---|---|---|---|
| | | | | |
| **SP** | **ZT 666-SP-SI** | **M6 x 1** | 14 mm **/ 9/16"** | **Stahl-Ring /** STEEL-FOOTPLATE |
| **SP** | **ZT 666-SP-NI** | **M6 x 1** | 14 mm **/ 9/16"** | **Nylon-Ring /** NYLON FOOTPLATE |
| **SP** | **ZT 666-SP-SE** | **M6 x 1** | 17 mm **/ 11/16"** | **Stahl-Ring /** STEEL-FOOTPLATE |
| **SP** | **ZT 666-SP-NE** | **M6 x 1** | 17 mm **/ 11/16"** | **Nylon-Ring /** NYLON FOOTPLATE |
| **WP** | **ZT 666-WP-SE** | **M6 x 1** | 21 mm **/ 13/16"** | **Stahl-Ring /** STEEL-FOOTPLATE |
| **WP** | **ZT 666-WP-NE** | **M6 x 1** | 21 mm **/ 13/16"** | **Nylon-Ring /** NYLON FOOTPLATE |
| | | | | |
| **SP** | **ZT 667-SP-SI** | **M8 x 1** | 14 mm **/ 9/16"** | **Stahl-Ring /** STEEL-FOOTPLATE |
| **SP** | **ZT 667-SP-NI** | **M8 x 1** | 14 mm **/ 9/16"** | **Nylon-Ring /** NYLON FOOTPLATE |
| **SP** | **ZT 667-SP-SE** | **M8 x 1** | 17 mm **/ 11/16"** | **Stahl-Ring /** STEEL-FOOTPLATE |
| **SP** | **ZT 667-SP-NE** | **M8 x 1** | 17 mm **/ 11/16"** | **Nylon-Ring /** NYLON FOOTPLATE |
| **WP** | **ZT 667-WP-SE** | **M8 x 1** | 21 mm **/ 13/16"** | **Stahl-Ring /** STEEL-FOOTPLATE |
| **WP** | **ZT 667-WP-NE** | **M8 x 1** | 21 mm **/ 13/16"** | **Nylon-Ring /** NYLON FOOTPLATE |
| | | | | |
| **SP** | **ZT 668-SP-SI** | **1/4"-28** | 14 mm **/ 9/16"** | **Stahl-Ring /** STEEL-FOOTPLATE |
| **SP** | **ZT 668-SP-NI** | **1/4"-28** | 14 mm **/ 9/16"** | **Nylon-Ring /** NYLON FOOTPLATE |
| **SP** | **ZT 668-SP-SE** | **1/4"-28** | 17 mm **/ 11/16"** | **Stahl-Ring /** STEEL-FOOTPLATE |
| **SP** | **ZT 668-SP-NE** | **1/4"-28** | 17 mm **/ 11/16"** | **Nylon-Ring /** NYLON FOOTPLATE |
| **WP** | **ZT 668-WP-SE** | **1/4"-28** | 21 mm **/ 13/16"** | **Stahl-Ring /** STEEL-FOOTPLATE |
| **WP** | **ZT 668-WP-NE** | **1/4"-28** | 21 mm **/ 13/16"** | **Nylon-Ring /** NYLON FOOTPLATE |

| **SI/NI für Innengewinde /** FOR INTERNAL THREAD | | | **SE/NE für Außengewinde /** FOR EXTERNAL THREAD | |
|---|---|---|---|---|
| | Stahl-Ring/Steel-Footplate  **SI** | Nylon-Ring/Nylon-Footplate  **NI** | Stahl-Ring/Steel-Footplate  **SE** | Nylon-Ring/Nylon-Footplate  **NE** |
| **Für Spänekorb:** FOR SKIRT: | **Artikel Nr.** / PART NO. : | **Artikel Nr. /** PART NO. : | **Artikel Nr. /** PART NO. : | **Artikel Nr.** / PART NO. : |
| Type **-SP-** | **ZT 666017** | **ZT 666018** | **ZT 666019** | **ZT 666020** |
| Type **-WP-** | **-----** | **-----** | **ZT 666022** | **ZT 666023** |

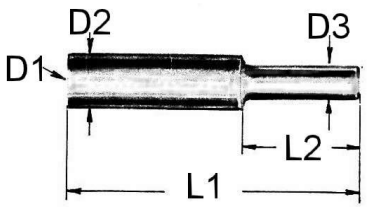


**Halter mit Innengewinde**
**für Senker und Hohlfräser**
HOLDER WITH INTERNAL THREAD
FOR COUNTERSINK CUTTERS AND HOLLOW CUTTERS

| Artikel-Nr. PART NO. | D1 | L1 | L2 | D2 | D3 |
|---|---|---|---|---|---|
| **202 001** | **M 6 x 1** | **22 mm** (0.866") | **8 mm** (0.315") | **10 mm** (0.394") | **4 mm** (0.158") |
| **202 002** | **M 6 x 1** | **32 mm** (1.260") | **15 mm** (0.591") | **10 mm** (0.394") | **6 mm** (0.236") |
| **202 003** | **1/4"- 28** | **32 mm** (1.260") | **15 mm** (0.591") | **10 mm** (0.394") | **6 mm** (0.236") |
| **202 006** | **M 6 x 1** | **50 mm** (1.969") | **20 mm** (0.787") | **10 mm** (0.394") | **6 mm** (0.236") |
| **202 007** | **1/4"- 28** | **50 mm** (1.969") | **20 mm** (0.787") | **10 mm** (0.394") | **6 mm** (0.236") |
| **202 010** | **M 8 x 1** | **50 mm** (1.969") | **20 mm** (0.787") | **12 mm** (0.472") | **6 mm** (0.236") |
| **202 011** | **3/8"-24** | **50 mm** (1.969") | **20 mm** (0.787") | **14 mm** (0.551") | **6 mm** (0.236") |
| **202 034** | **1/4"- 28** | **70 mm** (2.756") | **25 mm** (0.984") | **10 mm** (0.394") | **6 mm** (0.236") |
| **202 036** | **1/4"- 28** | **130 mm** (5.118") | **20 mm** (0.787") | **10 mm** (0.394") | **6 mm** (0.236") |

## SENKER FÜR *BRILES* NIETEN
COUNTERSINK CUTTER
FOR *BRILES* FASTENERS MS14218 (BACR15FV)

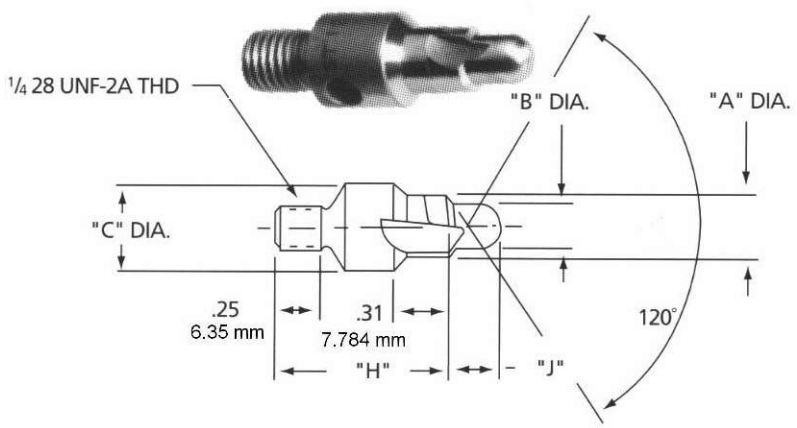


# 438BRC-....

**Empfohlene Anschlaghalter Serie 444 oder ZT680**
RECOMMENDED MICROSTOP SERIE 444 OR ZT680

| Artikel-Nr. PART NO. | Nietgröße RIVET SIZE | Gewinde THREAD | C | A | B | H | J |
|---|---|---|---|---|---|---|---|
| **438BRC-4** | **1/8"** 3,18 mm | **1/4"-28** | **3/8"** 9,53 mm | **.1625** 4,13 mm | **.126** 3,20 mm | **.952** 24,18 mm | **.200** 5,08 mm |
| **438BRC-5** | **5/32"** 3,96 mm | **1/4"-28** | **3/8"** 9,53 mm | **.2105** 5,35 mm | **.159** 4,04 mm | **.955** 24,26 mm | **.220** 5,59 mm |
| **438BRC-6** | **3/16"** 4,76 mm | **1/4"-28** | **3/8"** 9,53 mm | **.2585** 6,57 mm | **.191** 4,85 mm | **.958** 24,33 mm | **.250** 6,35 mm |
| **438BRC-7** | **7/32"** 5,56 mm | **1/4"-28** | **3/8"** 9,53 mm | **.3125** 7,94 mm | **.226** 5,74 mm | **.962** 24,43 mm | **.280** 7,11 mm |
| **438BRC-8** | **1/4"** 6,35 mm | **1/4"-28** | **1/2"** 12,7 mm | **.3585** 9,11 mm | **.255** 6,48 mm | **.966** 24,54 mm | **.280** 7,11 mm |

# 100° HSS - Senker
# 100° HSS - COUNTERSINK CUTTERS

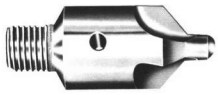

## 3- Schneiden, mit festem Führungszapfen, Gewinde 1/4"-28

3-FLUTES, WITH SOLID PILOT, THREAD 1/4"-28

| **Körper-Maß** BODY-DIA. | 6,35 mm **1/4"** | 7,94 mm **5/16"** | 9,53 mm **3/8"** | 11,1 mm **7/16"** | 12,7 mm **1/2"** | 14,3 mm **9/16"** | 15,9 mm **5/8"** |
|---|---|---|---|---|---|---|---|
| **Zapfen-Maß** PILOT DIA. | **Artikel-Nr.** PART NO. | **Artikel-Nr.** PART NO. | **Artikel-Nr.** PART NO. | **Artikel-Nr.** PART NO. | **Artikel-Nr.** PART NO. | **Artikel-Nr.** PART NO. | **Artikel-Nr.** PART NO. |
| | **SPECIAL** | **SPECIAL** | **SPECIAL** | **Standard** | **SPECIAL** | **SPECIAL** | **SPECIAL** |
| 2,38 / **3/32"** | **420A4-3/32"** | **420B4-3/32"** | **420C4-3/32"** | **420D4-3/32"** | **420E4-3/32"** | | |
| 2,50 / **#40** | **420A4-#40** | **420B4-#40** | **420C4-#40** | **420D4-#40** | **420E4-#40** | | |
| 3,18 / **1/8"** | **420A4-1/8"** | **420B4-1/8"** | **420C4-1/8"** | **420D4-1/8"** | **420E4-1/8"** | | |
| 3,26 / **#30** | **420A4-#30** | **420B4-#30** | **420C4-#30** | **420D4-#30** | **420E4-#30** | | |
| 3,97 / **5/32"** | | | **420C4-5/32"** | **420D4-5/32"** | **420E4-5/32"** | **420F4-5/32"** | **420G4-5/32"** |
| 4,04 / **#21** | | | **420C4-#21** | **420D4-#21** | **420E4-#21** | **420F4-#21** | **420G4-#21** |
| 4,76 / **3/16"** | | | | **420D4-3/16"** | **420E4-3/16"** | **420F4-3/16"** | **420G4-3/16"** |
| 4,91 / **#10** | | | | **420D4-#10** | **420E4-#10** | **420F4-#10** | **420G4-#10** |
| 6,35 / **1/4"** | | | | **420D4-1/4"** | **420E4-1/4"** | **420F4-1/4"** | **420G4-1/4"** |

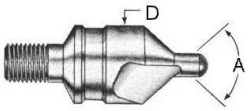


## 2- Schneiden, mit festem Führungszapfen, Gewinde 1/4"-28

2-FLUTES, WITH SOLID PILOT, THREAD 1/4"-28

| **Körper-Maß** BODY-DIA. | 6,35 mm **1/4"** | 7,94 mm **5/16"** | 9,53 mm **3/8"** | 11,1 mm **7/16"** | 12,7 mm **1/2"** | 14,3 mm **9/16"** | 15,9 mm **5/8"** |
|---|---|---|---|---|---|---|---|
| **Zapfen-Maß** PILOT DIA. | **Artikel-Nr.** PART NO. | **Artikel-Nr.** PART NO. | **Artikel-Nr.** PART NO. | **Artikel-Nr.** PART NO. | **Artikel-Nr.** PART NO. | **Artikel-Nr.** PART NO. | **Artikel-Nr.** PART NO. |
| | **SPECIAL** | **SPECIAL** | **SPECIAL** | **SPECIAL** | **Standard** | **SPECIAL** | **SPECIAL** |
| 2,38 / **3/32"** | **445A4-3/32"** | **445B4-3/32"** | **445C4-3/32"** | **445D4-3/32"** | **445E4-3/32"** | | |
| 2,50 / **#40** | **445A4-#40** | **445B4-#40** | **445C4-#40** | **445D4-#40** | **445E4-#40** | | |
| 3,18 / **1/8"** | **445A4-1/8"** | **445B4-1/8"** | **445C4-1/8"** | **445D4-1/8"** | **445E4-1/8"** | | |
| 3,26 / **#30** | **445A4-#30** | **445B4-#30** | **445C4-#30** | **445D4-#30** | **445E4-#30** | | |
| 3,97 / **5/32"** | | | **445C4-5/32"** | **445D4-5/32"** | **445E4-5/32"** | **445F4-5/32"** | **445G4-5/32"** |
| 4,04 / **#21** | | | **445C4-#21** | **445D4-#21** | **445E4-#21** | **445F4-#21** | **445G4-#21** |
| 4,76 / **3/16"** | | | | **445D-3/16"** | **445E4-3/16"** | **445F4-3/16"** | **445G4-3/16"** |
| 4,91 / **#10** | | | | | **445E4-#10** | **445F4-#10** | **445G4-#10** |
| 6,35 / **1/4"** | | | | | **445E4-1/4"** | **445F4-1/4"** | **445G4-1/4"** |

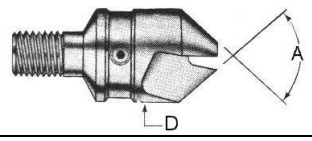


## 2- Schneiden, Gewinde 1/4"-28, für auswechselbare Führungszapfen mit Schaft 2,18 mm

2-FLUTES, THREAD 1/4"-28,
FOR REPLACEABLE PILOTS WITH SHANK .086"

| **Körper-Maß** BODY-DIA. | 6,35 mm **1/4"** | 7,94 mm **5/16"** | 9,53 mm **3/8"** | 11,1 mm **7/16"** | 12,7 mm **1/2"** | 14,3 mm **9/16"** | 15,9 mm **5/8"** |
|---|---|---|---|---|---|---|---|
| | **SPECIAL** | **SPECIAL** | **Standard** | **Standard** | **Standard** | **SPECIAL** | **Standard** |
| **Artikel-Nr.** PART NO. | **455A-4** | **455B-4** | **455C-4** | **455D-4** | **455E-4** | **455F-4** | **455G-4** |

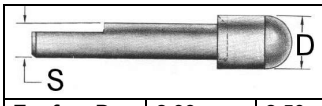


## Führungszapfen mit Schaft 2,18 mm, für Senker "455..."

REPLACEABLE PILOTS WITH SHANK .086" FOR CUTTER "455..."

| **Zapfen=D** PILOT =D | 2,38 mm **3/32"** | 2,50 mm **#40** | 3,18 mm **1/8"** | 3,26 mm **#30** | 3,97 mm **5/32"** | 4,04 mm **#21** | 4,76 mm **3/16"** | 4,85 mm **#11** | 4,91 mm **#10** | 5,56 mm **7/32"** | 6,35 mm **1/4"** |
|---|---|---|---|---|---|---|---|---|---|---|---|
| **Artikel-Nr.** PART NO. | **484-56** | **484-2** | **484-57** | **484-12** | **484-59** | **484-21** | **484-61** | **484-31** | **484-32** | **484-63** | **484-65** |

**Andere Abmessungen und Winkel auf Anfrage** / OTHER DIMENSION AND ANGLES ON REQUEST

# 100° HSCO - Senker mit Radius
## 100° COBALT - COUNTERSINK CUTTERS WITH RADIUS (M42)




**Mit festem Führungszapfen und kleinem Radius**

WITH SOLID PILOT AND SMALL RADIUS

| **Artikel-Nr.** PART NO. | **Körper-Maß** BODY-DIA. | **Zapfen-Maß** PILOT DIA. | **Radius** (min.-max.) | **Gewinde** THREAD | **Schneiden** FLUTES |
|---|---|---|---|---|---|
| **569 E 10 - 2.38** | **10,0 mm** (.3937) | **2,38 mm** (.0938) | **0,3-0,5** (.0118-.0197) | **M6 x 1** | **2** |
| **569 E 10 - 3.17** | **10,0 mm** (.3937) | **3,17 mm** (.1240) | **0,6-0,9** (.0236-.0354) | **M6 x 1** | **2** |
| **569 E 10 - 3.50** | **10,0 mm** (.3937) | **3,50 mm** (.1378) | **0,6-0,9** (.0236-.0354) | **M6 x 1** | **2** |
| **569 E 10 - 3.60** | **10,0 mm** (.3937) | **3,60 mm** (.1417) | **0,6-0,9** (.0236-.0354) | **M6 x 1** | **2** |
| **569 E 10 - 3.96** | **10,0 mm** (.3937) | **3,96 mm** (.1559) | **0,6-0,9** (.0236-.0354) | **M6 x 1** | **2** |
| **569 E 10 - 4.00** | **10,0 mm** (.3937) | **4,00 mm** (.1575) | **0,6-0,9** (.0236-.0354) | **M6 x 1** | **2** |
| **569 E 10 - 4.35** | **10,0 mm** (.3937) | **4,35 mm** (.1713) | **0,6-0,9** (.0236-.0354) | **M6 x 1** | **2** |
| **569 E 10 - 4.76** | **10,0 mm** (.3937) | **4,76 mm** (.1874) | **0,6-0,9** (.0236-.0354) | **M6 x 1** | **2** |
| **569 E 10 - 5.08** | **10,0 mm** (.3937) | **5,08 mm** (.2000) | **0,6-0,9** (.0236-.0354) | **M6 x 1** | **2** |
| **569 E 10 - 5.49** | **10,0 mm** (.3937) | **5,49 mm** (.2161) | **0,6-0,9** (.0236-.0354) | **M6 x 1** | **2** |

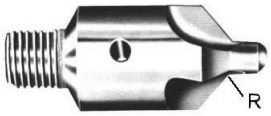


**Mit festem Führungszapfen und kleinem Radius**

WITH SOLID PILOT AND SMALL RADIUS

| **Artikel-Nr.** PART NO. | **Körper-Maß** BODY-DIA. | **Zapfen-Maß** PILOT DIA. | **Radius** (min.-max.) | **Gewinde** THREAD | **Schneiden** FLUTES |
|---|---|---|---|---|---|
| **575 E 14 - 4.76** | **14,0 mm** (.5512) | **4,76 mm** (.1874) | **0,6-0,9** (.0236-.0354) | **M8 x 1** | **3** |
| **575 E 14 - 5.00** | **14,0 mm** (.5512) | **5,00 mm** (.1969) | **0,6-0,9** (.0236-.0354) | **M8 x 1** | **3** |
| **575 E 14 - 5.60** | **14,0 mm** (.5512) | **5,60 mm** (.2205) | **0,6-0,9** (.0236-.0354) | **M8 x 1** | **3** |
| **575 E 14 - 6.00** | **14,0 mm** (.5512) | **6,00 mm** (.2362) | **0,6-0,9** (.0236-.0354) | **M8 x 1** | **3** |
| **575 E 14 - 6.27** | **14,0 mm** (.5512) | **6,27 mm** (.2470) | **0,6-0,9** (.0236-.0354) | **M8 x 1** | **3** |
| **575 E 14 - 6.65** | **14,0 mm** (.5512) | **6,65 mm** (.2618) | **0,6-0,9** (.0236-.0354) | **M8 x 1** | **3** |
| **575 E 14 - 7.08** | **14,0 mm** (.5512) | **7,08 mm** (.2787) | **0,6-0,9** (.0236-.0354) | **M8 x 1** | **3** |
| **575 E 14 - 7.84** | **14,0 mm** (.5512) | **7,84 mm** (.3087) | **0,6-0,9** (.0236-.0354) | **M8 x 1** | **3** |
| **575 E 14 - 8.25** | **14,0 mm** (.5512) | **8,25 mm** (.3248) | **0,6-0,9** (.0236-.0354) | **M8 x 1** | **3** |
| **575 E 14 - 8.63** | **14,0 mm** (.5512) | **8,63 mm** (.3398) | **0,6-0,9** (.0236-.0354) | **M8 x 1** | **3** |
| **575 E 14 - 9.04** | **14,0 mm** (.5512) | **9,04 mm** (.3559) | **0,6-0,9** (.0236-.0354) | **M8 x 1** | **3** |
| | | | | | |
| **575 E 17 - 6.27** | **17,0 mm** (.6693) | **6,27 mm** (.2470) | **0,6-0,9** (.0236-.0354) | **M8 x 1** | **3** |
| **575 E 17 - 6.65** | **17,0 mm** (.6693) | **6,67 mm** (.2626) | **0,6-0,9** (.0236-.0354) | **M8 x 1** | **3** |
| **575 E 17 - 7.08** | **17,0 mm** (.6693) | **7,05 mm** (.2776) | **0,6-0,9** (.0236-.0354) | **M8 x 1** | **3** |
| **575 E 17 - 9.42** | **17,0 mm** (.6693) | **9,42 mm** (.3709) | **0,6-0,9** (.0236-.0354) | **M8 x 1** | **3** |
| **575 E 17 - 9.82** | **17,0 mm** (.6693) | **9,82 mm** (.3866) | **0,6-0,9** (.0236-.0354) | **M8 x 1** | **3** |
| **575 E 17 - 10.21** | **17,0 mm** (.6693) | **10,21 mm** (.4020) | **0,6-0,9** (.0236-.0354) | **M8 x 1** | **3** |
| **575 E 17 - 10.61** | **17,0 mm** (.6693) | **10,61 mm** (.4177) | **0,6-0,9** (.0236-.0354) | **M8 x 1** | **3** |

**Andere Abmessungen und Winkel auf Anfrage /** OTHER DIMENSION AND ANGLES ON REQUEST

## 100° HSS-E (HSCO) Senker
## 100° COBALT - COUNTERSINK CUTTERS (M42)



**Für auswechselbare Führungszapfen**

FOR REPLACEABLE PILOTS

| **Artikel-Nr.** PART NO. | **Körper-Maß** BODY-DIA. | **Bohrung** PILOT HOLE | **Gewinde** THREAD | **Schneiden** FLUTES |
|---|---|---|---|---|
| **MBBN549A-10x2,0-2HSS-E** | **10,0 mm** (.3937) | **2,0 mm** (.0787) | **M6 x 1** | **2** |
| **MBBN549A-10x2,5-2HSS-E** | **10,0 mm** (.3937) | **2,5 mm** (.0984) | **M6 x 1** | **2** |
| **MBBN549A-10x3,5-2HSS-E** | **10,0 mm** (.3937) | **3,5 mm** (.1378) | **M6 x 1** | **2** |
| **MBBN549A-14x3,5-2HSS-E** | **14,0 mm** (.5512) | **3,5 mm** (.1378) | **M8 x 1** | **2** |
| **MBBN549A-14x4,0-2HSS-E** | **14,0 mm** (.5512) | **4,0 mm** (.1575) | **M8 x 1** | **2** |

## 100°/60° HSS-E (HSCO) - Hi-Lok Senker
## 100°/60° COBALT - HI-LOK COUNTERSINK CUTTERS (M42)



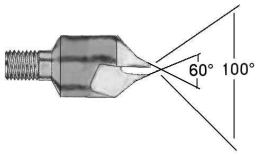


**2 Schneiden,**
**für auswechselbare Führungszapfen**
**2 Schneidwinkel 100° + 60°**

2 FLUTES,
FOR REPLACEABLE PILOTS
2 CUTTING ANGELES 100° + 60°

| **Artikel-Nr. (ohne Führungszapfen !)** PART NO. (WITHOUT PILOT !) | **Körper-Maß** BODY-DIA. | **Bohrung** PILOT HOLE | **Gewinde** THREAD |
|---|---|---|---|
| **MBBN549C-10x2,5-2HSS-E** | **10,0 mm** (.3937) | **2,5 mm** (.0984) | **M6 x 1** |
| **MBBN549C-10x3,5-2HSS-E** | **10,0 mm** (.3937) | **3,5 mm** (.1378) | **M6 x 1** |
| **MBBN549C-14x4,0-2HSS-E** | **14,0 mm** (.5512) | **4,0 mm** (.1575) | **M8 x 1** |

| **Artikel-Nr. (inkl. 1 Führungszapfen !)** PART NO. (incl. 1 Pilot !) | **Körper-Maß** BODY-DIA. | **Bohrung** PILOT HOLE | **Zapfenmaß** PILOT DIA. | **Gewinde** THREAD |
|---|---|---|---|---|
| **MBBN549C-10x2,5-2HSS-E-2,5 x 4,05** (REP9-4,07x2,5x4,05) | **10,0 mm** (.3937) | **2,5 mm** (.0984) | **4,05 mm** (.1594) | **M6 x 1** |
| **MBBN549C-10x3,5-2HSS-E-3,5 x 4,71** (REP10-4,73x3,5x4,71) | **10,0 mm** (.3937) | **3,5 mm** (.1378) | **4,71 mm** (.1854) | **M6 x 1** |
| **MBBN549C-14x4,0-2HSS-E-4,0 x 6,24** (REP11-6,26x4,0x6,24) | **14,0 mm** (.5512) | **4,0 mm** (.1575) | **6,24 mm** (.2457) | **M8 x 1** |

**Andere Abmessungen und Winkel auf Anfrage /** OTHER DIMENSION AND ANGLES ON REQUEST

# 100° Voll-Hartmetall-Senker
## 100° SOLID CARBIDE STOP COUNTERSINK CUTTERS



**Für auswechselbare Führungszapfen (aufgelöteter Kopf aus VHM)**
FOR REPLACEABLE PILOTS (SOLID CARBIDE HEAD)

| **Artikel-Nr.** PART NO. | **Körper-Maß** BODY-DIA. | **Bohrung** PILOT HOLE | **Gewinde** THREAD | **Schneiden** FLUTES |
|---|---|---|---|---|
| **MBBN549B-10x2,0-3K10** | **10,0 mm** (.3937) | **2,0 mm** (.0787) | **M6 x 1** | **3** |
| **MBBN549B-10x2,5-3K10** | **10,0 mm** (.3937) | **2,5 mm** (.0984) | **M6 x 1** | **3** |
| **MBBN549B-10x3,5-3K10** | **10,0 mm** (.3937) | **3,5 mm** (.1378) | **M6 x 1** | **3** |
| **MBBN549B-10x4,0-3K10** | **10,0 mm** (.3937) | **4,0 mm** (.1575) | **M6 x 1** | **3** |

# 100° Hartmetall-bestückte-Senker
## 100° CARBIDE TIPPED STOP COUNTERSINK CUTTERS



**Für auswechselbare Führungszapfen**

FOR REPLACEABLE PILOTS

| **Artikel-Nr.** PART NO. | **Körper-Maß** BODY-DIA. | **Bohrung** PILOT HOLE | **Gewinde** THREAD | **Schneiden** FLUTES |
|---|---|---|---|---|
| **MBBN549B-14x2,5-3K10** | **14,0 mm** (.3937) | **2,5 mm** (.0984) | **M8 x 1** | **3** |
| **MBBN549B-14x4,0-3K10** | **14,0 mm** (.3937) | **4,0 mm** (.1575) | **M8 x 1** | **3** |
| **MBBN549B-17x5,0-3K10** | **17,0 mm** (.4802) | **5,0 mm** (.1969) | **M8 x 1** | **3** |
| **MBBN549B-21x5,0-3K10** | **21,0 mm** (.8268) | **5,0 mm** (.1969) | **M8 x 1** | **3** |




**Führungszapfen für Senker MBBN549...**
REPLACEABLE PILOTS FOR CUTTER MBBN549...
**Standard Kombinationen**/STANDARD COMBINATIONS

| **D** **S** **=** | **2,0 mm** (.0787) | **2,5 mm** (.0984) | **3,5mm** (.1378) | **4,0 mm** (.1575) | **5,0 mm** (.1969) |
|---|---|---|---|---|---|
| **2,38 mm** (.0937) | MBBN549-2,0x2,38 | | | | |
| **2,40 mm** (.0945) | MBBN549-2,0x2,40 | | | | |
| **2,50 mm** (.0984) | MBBN549-2,0x2,50 | | | | |
| **3,00 mm** (.1181) | MBBN549-2,0x3,00 | MBBN549-2,5x3,00 | | | |
| **3,17 mm** (.1248) | | MBBN549-2,5x3,17 | | | |
| **3,20 mm** (.1260) | MBBN549-2,0x3,20 | | | | |
| **3,50 mm** (.1378) | | MBBN549-2,5x3,50 | | | |
| **3,80 mm** (.1496) | | MBBN549-2,5x3,80 | | | |
| **4,00 mm** (.1575) | MBBN549-2,0x4,00 | MBBN549-2,5x4,00 | MBBN549-3,5x4,00 | | |
| **4,05 mm** (.1594) | | MBBN549-2,5x4,05 | | | |
| **4,17 mm** (.1642) | | MBBN549-2,5x4,17 | MBBN549-3,5x4,17 | | |
| **4,71 mm** (.1854) | | | MBBN549-3,5x4,71 | | |
| **4,76 mm** (.1874) | MBBN549-2,0x4,76 | | MBBN549-3,5x4,76 | MBBN549-4,0x4,76 | |
| **4,80 mm** (.1890) | | | MBBN549-3,5x4,80 | | |
| **4,83 mm** (.1902) | | | MBBN549-3,5x4,83 | MBBN549-4,0x4,83 | |
| **5,10 mm** (.2008) | | | MBBN549-3,5x5,10 | | |
| **5,60 mm** (.2205) | | | MBBN549-3,5x5,60 | | |
| **6,00 mm** (.2362) | | | MBBN549-3,5x6,00 | | |
| **6,24 mm** (.2457) | | | | MBBN549-4,0x6,24 | |
| **6,27 mm** (.2469) | | | | | MBBN549-5,0x6,27 |
| **6,35 mm** (.2500) | MBBN549-2,0x6,35 | | MBBN549-3,5x6,35 | MBBN549-4,0x6,35 | |
| **6,67 mm** (.2626) | | | | | MBBN549-5,0x6,67 |
| **6,70 mm** (.2638) | | | MBBN549-3,5x6,70 | | |
| **7,05 mm** (.2776) | | | | | MBBN549-5,0x7,05 |
| **7,92 mm** (.3118) | | | | | MBBN549-5,0x7,92 |
| **8,00 mm** (.3150) | | | | MBBN549-4,0x8,00 | |
| **9,52 mm** (.3748) | | | | | MBBN549-5,0x9,52 |

**Andere Abmessungen und Winkel auf Anfrage** / OTHER DIMENSION AND ANGLES ON REQUEST

# 100° Voll-Hartmetall-Senker
## 100° SOLID CARBIDE STOP COUNTERSINK CUTTERS

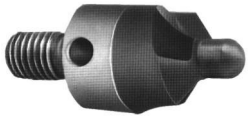

**2- Schneiden, mit festem Führungszapfen**
**mit aufgelötetem VHM-Kopf**
2-FLUTES, WITH SOLID PILOT
SOLID CARBIDE HEAD BRAZED TO STEEL SHANK

| **Körper-Maß** BODY-DIA. | 11,1 mm **7/16"** | 12,7 mm **1/2"** | 15,9 mm **5/8"** | 19,1 mm **3/4"** | 22,3 mm **7/8"** | 25,4 mm **1"** |
|---|---|---|---|---|---|---|
| **Gewinde** THREAD | **1/4"-28** | **1/4"-28** | **1/4"-28** | **3/8"-24** | **3/8"-24** | **3/8"-24** |
| **Zapfen-Maß** PILOT DIA. | **Artikel-Nr.** PART NO. | **Artikel-Nr.** PART NO. | **Artikel-Nr.** PART NO. | **Artikel-Nr.** PART NO. | **Artikel-Nr.** PART NO. | **Artikel-Nr.** PART NO. |
| 2,38 / **3/32"** | **151-2SC-3/32"** | **152-2SC-3/32"** | | | | |
| 2,50 / **#40** | **151-2SC-40** | **152-2SC-40** | | | | |
| 3,18 / **1/8"** | **151-2SC-1/8"** | **152-2SC-1/8"** | | | | |
| 3,26 / **#30** | **151-2SC-30** | **152-2SC-30** | | | | |
| 3,97 / **5/32"** | **151-2SC-5/32"** | **152-2SC-5/32"** | **153-2SC-5/32"** | | | |
| 4,04 / **#21** | **151-2SC-21** | **152-2SC-21** | **153-2SC-21** | | | |
| 4,76 / **3/16"** | **151-2SC-3/16"** | **152-2SC-3/16"** | **153-2SC-3/16"** | | | |
| 4,85 / **#11** | | **152-2SC-11** | **153-2SC-11** | | | |
| 4,91 / **#10** | | **152-2SC-10** | **153-2SC-10** | | | |
| 6,35 / **1/4"** | | **152-2SC-1/4"** | **153-2SC-1/4"** | **155-2SC-1/4"** | **156-2SC-1/4"** | **157-2SC-1/4"** |
| 7,94 / **5/16"** | | | **153-2SC-5/16"** | **155-2SC-5/16"** | **156-2SC-5/16"** | **157-2SC-5/16"** |
| 9,53 / **3/8"** | | | | **155-2SC-3/8"** | **156-2SC-3/8"** | **157-2SC-3/8"** |
| 11,11/ **7/16"** | | | | | **156-2SC-7/16"** | **157-2SC-7/16"** |
| 12,70/ **1/2"** | | | | | | **157-2SC-1/2"** |

# 100° Hartmetall-bestückte-Senker
## 100° CARBIDE TIPPED STOP COUNTERSINK CUTTERS

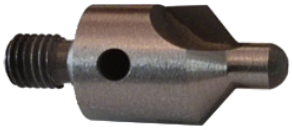

**2- Schneiden, mit festem Führungszapfen**
2-FLUTES, WITH SOLID PILOT

| **Körper-Maß** BODY-DIA. | 11,1 mm **7/16"** | 12,7 mm **1/2"** | 15,9 mm **5/8"** | 19,1 mm **3/4"** | 22,3 mm **7/8"** | 25,4 mm **1"** |
|---|---|---|---|---|---|---|
| **Gewinde** THREAD | **1/4"-28** | **1/4"-28** | **1/4"-28** | **3/8"-24** | **3/8"-24** | **3/8"-24** |
| **Zapfen-Maß** PILOT DIA. | **Artikel-Nr.** PART NO. | **Artikel-Nr.** PART NO. | **Artikel-Nr.** PART NO. | **Artikel-Nr.** PART NO. | **Artikel-Nr.** PART NO. | **Artikel-Nr.** PART NO. |
| 2,38 / **3/32"** | **151-2CT-3/32"** | **152-2CT-3/32"** | | | | |
| 2,50 / **#40** | **151-2CT-40** | **152-2CT-40** | | | | |
| 3,18 / **1/8"** | **151-2CT-1/8"** | **152-2CT-1/8"** | | | | |
| 3,26 / **#30** | **151-2CT-30** | **152-2CT-30** | | | | |
| 3,97 / **5/32"** | **151-2CT-5/32"** | **152-2CT-5/32"** | **153-2CT-5/32"** | | | |
| 4,04 / **#21** | **151-2CT-21** | **152-2CT-21** | **153-2CT-21** | | | |
| 4,76 / **3/16"** | **151-2CT-3/16"** | **152-2CT-3/16"** | **153-2CT-3/16"** | | | |
| 4,85 / **#11** | | **152-2CT-11** | **153-2CT-11** | | | |
| 4,91 / **#10** | | **152-2CT-10** | **153-2CT-10** | | | |
| 6,35 / **1/4"** | | **152-2CT-1/4"** | **153-2CT-1/4"** | **155-2CT-1/4"** | **156-2CT-1/4"** | **157-2CT-1/4"** |
| 7,94 / **5/16"** | | | **153-2CT-5/16"** | **155-2CT-5/16"** | **156-2CT-5/16"** | **157-2CT-5/16"** |
| 9,53 / **3/8"** | | | | **155-2CT-3/8"** | **156-2CT-3/8"** | **157-2CT-3/8"** |
| 11,11/ **7/16"** | | | | | **156-2CT-7/16"** | **157-2CT-7/16"** |
| 12,70/ **1/2"** | | | | | | **157-2CT-1/2"** |

**Andere Abmessungen und Winkel auf Anfrage /** OTHER DIMENSION AND ANGLES ON REQUEST

# 100° Hartmetall-bestückte-Senker
## 100° CARBIDE TIPPED STOP COUNTERSINK CUTTERS

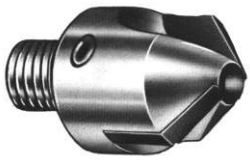

**Für auswechselbare Führungszapfen**
FOR REPLACEABLE PILOTS

SERIES 700

| **Artikel-Nr.** PART NO. | **Körper-Maß** BODY-DIA. | **Bohrung** PILOT HOLE | **Gewinde** THREAD | **Schneiden** FLUTES |
|---|---|---|---|---|
| | | | | |
| **700-100°** | **3/8"** (9,53 mm) | **5/64"** (1,98 mm) | **1/4"-28** | **2** |
| **701-100°** | **7/16"** (11,11mm) | **5/64"** (1,98 mm) | **1/4"-28** | **2** |
| **702-100°** | **1/2"** (12,70 mm) | **5/64"** (1,98 mm) | **1/4"-28** | **2** |
| **703-100°** | **1/2"** (12,70 mm) | **3/32"** (2,38 mm) | **1/4"-28** | **2** |
| **704-100°** | **1/2"** (12,70 mm) | **1/8"** (3,18 mm) | **1/4"-28** | **2** |
| **705-100°** | **5/8"** (15,88 mm) | **1/8"** (3,18 mm) | **1/4"-28** | **2** |
| **706-100°** | **5/8"** (15,88 mm) | **3/16"** (4,76 mm) | **1/4"-28** | **2** |
| | | | | |
| **707A-100°** | **3/4"** (19,05 mm) | **3/16"** (4,76 mm) | **3/8"-24** | **3** |
| **708A-100°** | **7/8"** (22,23 mm) | **3/16"** (4,76 mm) | **3/8"-24** | **3** |
| **709A-100°** | **1"** (25,40 mm) | **3/16"** (4,76 mm) | **3/8"-24** | **3** |
| **710A-100°** | **1.1/8"** (28,58 mm) | **1/4"** (6,35 mm) | **3/8"-24** | **3** |
| **711A-100°** | **1.1/4"** (31,75 mm) | **1/4"** (6,35 mm) | **3/8"-24** | **3** |
| | | | | |
| **707B-100°** | **3/4"** (19,05 mm) | **3/16"** (4,76 mm) | **7/16"-20** | **3** |
| **708B-100°** | **7/8"** (22,23 mm) | **3/16"** (4,76 mm) | **7/16"-20** | **3** |
| **709B-100°** | **1"** (25,40 mm) | **3/16"** (4,76 mm) | **7/16"-20** | **3** |
| **710B-100°** | **1.1/8"** (28,58 mm) | **1/4"** (6,35 mm) | **7/16"-20** | **3** |
| **711B-100°** | **1.1/4"** (31,75 mm) | **1/4"** (6,35 mm) | **7/16"-20** | **3** |




**Führungszapfen für Senker Serie 700...**
REPLACEABLE PILOTS FOR CUTTER SERIES 700...
**Standard Kombinationen**/STANDARD COMBINATIONS

| **D** = **S** | **5/64"** (1,98 mm) | **3/32"** (2,38 mm) | **1/8"** (3,18 mm) | **3/16"** (4,76 mm) | **1/4"** (6,35 mm) |
|---|---|---|---|---|---|
| **1/8"** (3,18 mm) | **755-1-5/64"** | **755-1-3/32"** | | | |
| **#30** (3,26 mm) | **755-2-5/64"** | **755-2-3/32"** | | | |
| **5/32"** (3,97 mm) | **755-3-5/64"** | **755-3-3/32"** | **755-3-1/8"** | | |
| **#20** (4,09 mm) | **755-4-5/64"** | **755-4-3/32"** | **755-4-1/8"** | | |
| **3/16"** (4,76 mm) | **755-5-5/64"** | **755-5-3/32"** | **755-5-1/8"** | | |
| **#10** (4,91 mm) | **755-6-5/64"** | **755-6-3/32"** | **755-6-1/8"** | | |
| **7/32"** (5,56 mm) | **755-7-5/64"** | **755-7-3/32"** | **755-7-1/8"** | **755-7-3/16"** | |
| **1/4"** (6,35 mm) | **755-8-5/64"** | **755-8-3/32"** | **755-8-1/8"** | **755-8-3/16"** | |
| **"F"** (6,53 mm) | | **755-9-3/32"** | **755-9-1/8"** | **755-9-3/16"** | |
| **9/32"** (7,14 mm) | | | **755-10-1/8"** | **755-10-3/16"** | |
| **5/16"** (7,94 mm) | | | **755-11-1/8"** | **755-11-3/16"** | **755-11-1/4"** |
| **11/32"** (8,73 mm) | | | | **755-12-3/16"** | **755-12-1/4"** |
| **3/8"** (9,53 mm) | | | | **755-13-3/16"** | **755-13-1/4"** |
| **13/32"** (10,32 mm) | | | | **755-14-3/16"** | **755-14-1/4"** |
| **7/16"** (11,11 mm) | | | | **755-15-3/16"** | **755-15-1/4"** |
| **15/32"** (11,91 mm) | | | | **755-16-3/16"** | **755-16-1/4"** |
| **1/2"** (12,70 mm) | | | | **755-17-3/16"** | **755-17-1/4"** |
| **17/32"** (13,49 mm) | | | | **755-18-3/16"** | **755-18-1/4"** |
| **9/16"** (14,29 mm) | | | | **755-19-3/16"** | **755-19-1/4"** |
| **19/32"** (15,08 mm) | | | | **755-20-3/16"** | **755-20-1/4"** |
| **5/8"** (15,88 mm) | | | | **755-21-3/16"** | **755-21-1/4"** |

**Andere Abmessungen und Winkel auf Anfrage /** OTHER DIMENSION AND ANGLES ON REQUEST

# 100° Kevlar-Senker, mit sichelförmigen Schneiden

100° KEVLAR COUNTERSINK CUTTERS WITH "S" CUTTING FLUTES



**Für auswechselbare Führungszapfen**
FOR REPLACEABLE PILOTS

SERIES 455SK

| **Artikel-Nr.** PART NO. | **Körper-Maß** BODY-DIA. | **Bohrung** PILOT HOLE | **Gewinde** THREAD | **Schneiden** FLUTES |
|---|---|---|---|---|
| **455SKE-4-.086** | **1/2"** (12,70 mm) | **.086** (2,18 mm) | **1/4"-28** | **2** |
| **455SKG-4-.086** | **5/8"** (15,88 mm) | **.086** (2,18 mm) | **1/4"-28** | **2** |




**Führungszapfen mit Schaft 2,18 mm, für Senker "455P/SK"**
REPLACEABLE PILOTS WITH SHANK .086" FOR CUTTER "455P/SK"

| **Artikel-Nr.** PART NO. | **484-56** | **484-2** | **484-57** | **484-12** | **484-59** | **484-21** | **484-61** | **484-31** | **484-32** | **484-63** | **484-65** |
|---|---|---|---|---|---|---|---|---|---|---|---|
| **Zapfen=D** PILOT =D | 2,38 mm **3/32"** | 2,50 mm **#40** | 3,18 mm **1/8"** | 3,26 mm **#30** | 3,97 mm **5/32"** | 4,04 mm **#21** | 4,76 mm **3/16"** | 4,85 mm **#11** | 4,91 mm **#10** | 5,56 mm **7/32"** | 6,35 mm **1/4"** |




**Führungszapfen mit Schaft 3,18 mm, für Senker "455P.."**
REPLACEABLE PILOTS WITH SHANK 1/8" FOR CUTTER "455P.."

| **Artikel-Nr.** PART NO. | **755-3-1/8"** | **755-4-1/8"** | **755-5-1/8"** | **755-6-1/8"** | **755-7-1/8"** | **755-8-1/8"** | **755-9-1/8"** | **755-10-1/8"** | **755-11-1/8"** |
|---|---|---|---|---|---|---|---|---|---|
| **Zapfen=D** PILOT =D | 3,97 mm **5/32"** | 4,09 mm **#20** | 4,76 mm **3/16"** | 4,91 mm **#10** | 5,56 mm **7/32"** | 6,35 mm **1/4"** | 6,53 mm **"F"** | 7,14 mm **9/32"** | **5/16"** (7,94 mm) |



**Vollhartmetal-Bohrer mit Spezialanschliff**
**für KEVLAR und Kohlefaser Verbundwerkstoffe**
SOLID CARBIDE DRILL WITH SPECIAL GRINDING
FOR KEVLAR AND GRAPHITE COMPOSITES

| **Artikel-Nr.** / PART NO. | **342-3/32"** | **342-1/8"** | **342-5/32"** | **342-3/16"** | **342-1/4"** |
|---|---|---|---|---|---|
| **Durchmesser** / DIAMETER | **3/32"** (2,38 mm) | **1/8"** (3,18 mm) | **5/32"** (3,97 mm) | **3/16"** (4,76 mm) | **1/4"** (6,35 mm) |
| **Gesamtlänge** / O/A LENGTH | **1.690** (43 mm) | **1.930** (49 mm) | **2.160** (55 mm) | **2.440** (62 mm) | **3.1/4"** (82,55 mm) |
| **Schneidenlänge** / FLUTE LENGTH | **.551** (14 mm) | **.709** (18 mm) | **.866** (22 mm) | **1.024** (26 mm) | **2"** (50,80 mm) |

# 100° Senker für Kohlefaser-Verbundwerkstoffe, mit Polycrystalin-Diamant bestückten Schneiden

100° COMPOSITE COUNTERSINK CUTTERS WITH POLYCRISTALINE INSERTS



**Für auswechselbare Führungszapfen**
FOR REPLACEABLE PILOTS

SERIES 455P

| **Artikel-Nr.** PART NO. | **Körper-Maß** BODY-DIA. | **Bohrung** PILOT HOLE | **Gewinde** THREAD | **Schneiden** FLUTES |
|---|---|---|---|---|
| **455PCE-4-.086** | **1/2"** (12,70 mm) | **.086** (2,18 mm) | **1/4"-28** | **1** |
| **455PDE-4-.086** | **1/2"** (12,70 mm) | **.086** (2,18 mm) | **1/4"-28** | **2** |
| **455PCG-4-.086** | **5/8"** (15,88 mm) | **.086** (2,18 mm) | **1/4"-28** | **1** |
| **455PDG-4-.086** | **5/8"** (15,88 mm) | **.086** (2,18 mm) | **1/4"-28** | **2** |
| **455PCH-4-1/8"** | **3/4"** (19,05 mm) | **1/8"** (3,18 mm) | **3/8"-24** | **1** |
| **455PDH-4-1/8"** | **3/4"** (19,05 mm) | **1/8"** (3,18 mm) | **3/8"-24** | **2** |

**Andere Abmessungen und Winkel auf Anfrage** / OTHER DIMENSION AND ANGLES ON REQUEST

# PCD Tipped Countersinks with Pilot

100°/130° Angle Countersinks, Threaded Shank



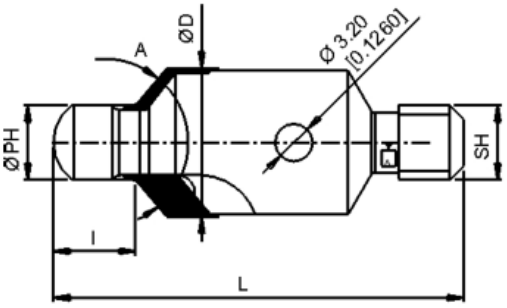


| Part Number | | D body dia | PD pilot dia | No. of Flutes | C' sink angle | Shank Thread |
|---|---|---|---|---|---|---|
| 100° | 130° | | | | | |
| 445PCD-C-4-.125 | 445PCD-C-8-.125 | 3/8" | 0.125 | 2 | 100°/130° | 1/4"-28 |
| 445PCD-C-4-.128 | 445PCD-C-8-.128 | 3/8" | 0.128 | 2 | 100°/130° | 1/4"-28 |
| 445PCD-D-4-.156 | 445PCD-D-8-.156 | 7/16" | 0.156 | 2 | 100°/130° | 1/4"-28 |
| 445PCD-D-4-.187 | 445PCD-D-8-.187 | 7/16" | 0.187 | 2 | 100°/130° | 1/4"-28 |
| 445PCD-E-4-.125 | 445PCD-E-8-.125 | 1/2" | 0.125 | 2 | 100°/130° | 1/4"-28 |
| 445PCD-E-4-.128 | 445PCD-E-8-.128 | 1/2" | 0.128 | 2 | 100°/130° | 1/4"-28 |
| 445PCD-E-4-.239 | 445PCD-E-8-.239 | 1/2" | 0.239 | 2 | 100°/130° | 1/4"-28 |
| 445PCD-G-4-.191 | 445PCD-G-8-.191 | 5/8" | 0.191 | 2 | 100°/130° | 1/4"-28 |
| 445PCD-G-4-.250 | 445PCD-G-8-.250 | 5/8" | 0.250 | 2 | 100°/130° | 1/4"-28 |
| 445PCD-H-4-.312 | 445PCD-H-8-.312 | 3/4" | 0.312 | 2 | 100°/130° | 3/8"-24 |
| 445PCD-J-4-.312 | 445PCD-J-8-.312 | 7/8" | 0.312 | 2 | 100°/130° | 3/8"-24 |
| 445PCD-K-4-.312 | 445PCD-K-8-.312 | 1" | 0.312 | 2 | 100°/130° | 7/16"-20 |
| 445PCD-M-4-.312 | 445PCD-M-8-.312 | 1.1/4" | 0.312 | 2 | 100°/130° | 7/16"-20 |

# PCD Drill Countersinks 100°

| Part Number | Diameter Ø C.D. | Shank Ø d | Diameter C.D.2 | Angel deg. |
|---|---|---|---|---|
| WCDR- _ _ _ _ | from 0.1250 to 0.2500 | 3/8" | 3/8" | 100.0 |
| WCDR- _ _ _ _ | from 0.2540 to 0.3750 | 1/2" | 1/2" | 100.0 |
| WCDR- _ _ _ _ | from 0.3800 to 0.5000 | 1/2" | 3/4" | 100.0 |
| FCDR- _ _ _ _ | from 0.0980 to 0.2500 | 3/8" | 3/8" | 100.0 |
| FCDR- _ _ _ _ | from 0.2540 to 0.3125 | 1/2" | 1/2" | 100.0 |
| FCDR- _ _ _ _ | from 0.3130 to 0.3540 | 1/2" | 3/4" | 100.0 |

P/N Sample with a Ø C.D. of 0.2500 and Wafer/Spiral Tip: WCDR-2500

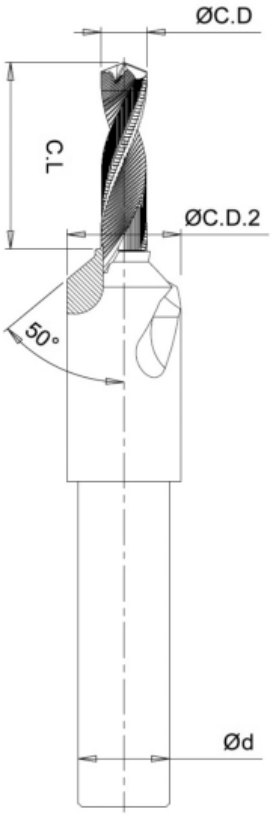


**WCDR:**
**Wafer/Spiral Tip**



**FCDR:**
**Full Nib Tip**



**PCD Drill Countersinks are also available with Thread**
**Andere Abmessungen auf Anfrage /** OTHER DIMENSIONS ON REQUEST

# DAN 5109

## 100° Senker, Hartmetall bestückt

## 100° CARBIDE TIPPED COUNTERSINK CUTTER



**3-Schneiden, mit festem Führungszapfen**
3-FLUTES, WITH SOLID PILOT

| Artikel-Nr. | Körper-Maß | Zapfen-Maß | Gewinde | Gesamtlänge | Zapfenlänge | Radius |
|---|---|---|---|---|---|---|
| PART NO. | BODY DIA. | PILOT DIA. | THREAD | OVERALL LENGTH | PILOT LENGTH | +/- 0,1 mm |
| **DAN5109-10-4,06-M6x1** | 10 mm | 4,06 mm | M 6 x 1 | 34 mm | 6 mm | 0,6 mm |
| **DAN5109-10-4,71-M6x1** | 10 mm | 4,71 mm | M 6 x 1 | 34 mm | 6 mm | 0,6 mm |
| **DAN5109-10-4,77-M6x1** | 10 mm | 4,77 mm | M 6 x 1 | 34 mm | 6 mm | 0,6 mm |
| **DAN5109-14-5,08-M8x1** | 14 mm | 5,08 mm | M 8 x 1 | 34 mm | 6 mm | 0,6 mm |
| **DAN5109-14-5,45-M8x1** | 14 mm | 5,45 mm | M 8 x 1 | 34 mm | 6 mm | 0,6 mm |
| **DAN5109-14-5,48-M8x1** | 14 mm | 5,48 mm | M 8 x 1 | 34 mm | 6 mm | 0,6 mm |
| **DAN5109-14-5,50-M8x1** | 14 mm | 5,50 mm | M 8 x 1 | 34 mm | 6 mm | 0,6 mm |
| **DAN5109-14-5,88-M8x1** | 14 mm | 5,88 mm | M 8 x 1 | 34 mm | 6 mm | 0,6 mm |
| **DAN5109-14-6,24-M8x1** | 14 mm | 6,24 mm | M 8 x 1 | 34 mm | 6 mm | 0,6 mm |
| **DAN5109-14-6,27-M8x1** | 14 mm | 6,27 mm | M 8 x 1 | 34 mm | 6 mm | 0,6 mm |
| **DAN5109-14-6,30-M8x1** | 14 mm | 6,30 mm | M 8 x 1 | 34 mm | 6 mm | 0,6 mm |
| **DAN5109-14-6,67-M8x1** | 14 mm | 6,67 mm | M 8 x 1 | 34 mm | 6 mm | 0,6 mm |
| **DAN5109-14-7,07-M8x1** | 14 mm | 7,07 mm | M 8 x 1 | 34 mm | 6 mm | 0,9 mm |
| **DAN5109-14-7,83-M8x1** | 14 mm | 7,83 mm | M 8 x 1 | 34 mm | 6 mm | 0,9 mm |
| **DAN5109-14-7,91-M8x1** | 14 mm | 7,91 mm | M 8 x 1 | 34 mm | 6 mm | 0,9 mm |
| **DAN5109-14-8,26-M8x1** | 14 mm | 8,26 mm | M 8 x 1 | 34 mm | 6 mm | 0,9 mm |
| **DAN5109-14-8,65-M8x1** | 14 mm | 8,65 mm | M 8 x 1 | 34 mm | 6 mm | 0,9 mm |
| **DAN5109-14-9,49-M8x1** | 14 mm | 9,49 mm | M 8 x 1 | 34 mm | 6 mm | 0,9 mm |

# HSCo - Schaftsenker - 100°

## HSSCo - STRAIGHT SHANK COUNTERSINK CUTTERS - 100°

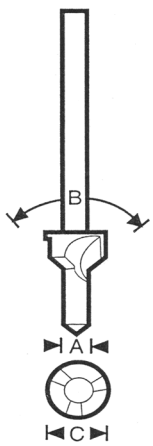


| Artikel-Nr. PART NO. | Zapfenmaß PILOT DIA. | Körper-Maß BODY DIA. | Schneiden FLUTES | Schaftmaß SHANK DIA |
|---|---|---|---|---|
| | A | C | | |
| **350-.1875-100-.0938** | 2,38 mm **3/32"** | 4,76 mm **3/16"** | **3** | 4,76 mm **3/16"** |
| **350-.2500-100-.1250** | 3,18 mm **1/8"** | 6,35 mm **1/4"** | **3** | 4,76 mm **3/16"** |
| **350-.3125-100-.1562** | 3,97 mm **5/32"** | 7,94 mm **5/16"** | **3** | 4,76 mm **3/16"** |
| **350-.3750-100-.1875** | 4,76 mm **3/16"** | 9,53 mm **3/8"** | **3** | 4,76 mm **3/16"** |
| **350-.5000-100-.2500** | 6,35 mm **1/4"** | 12,7 mm **1/2"** | **3** | 4,76 mm **3/16"** |
| | | | | |

**Andere Abmessungen und Winkel auf Anfrage** / OTHER DIMENSIONS AND ANGLES ON REQUEST

## 100° Voll-Hartmetall-Schaft-Senker
100° SOLID CARBIDE STRAIGHT SHANK COUNTERSINKS

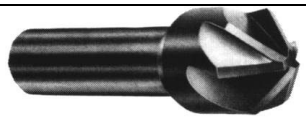

**6- Schneiden, mit aufgelötetem VHM-Kopf**
6-FLUTES WITH SOLID CARBIDE HEAD
BRAZED TO STEEL SHANK

| **Artikel-Nr.** PART NO. | **910-3/8"-100°** | **910-1/2"-100°** | **910-5/8"-100°** | **910-3/4"-100°** |
|---|---|---|---|---|
| **Körper-Maß** BODY-DIA. | **3/8"** (9,53 mm) | **1/2"** (12,70 mm) | **5/8"** (15,88 mm) | **3/4"** (19,05 mm) |
| **Schaftdurchmesser** SHANK DIAMETER | **1/4"** (6,35 mm) | **1/4"** (6,35 mm) | **3/8"** (9,53 mm) | **3/8"** (9,53 mm) |
| **Gesamtlänge ca.** APPR. O/A LENGTH | **2.1/4"** (57,2 mm) | **2.1/2"** (63,5 mm) | **2.3/4"** (69,9 mm) | **2.3/4"** (69,9 mm) |

## 100° HSS-Schaft-Senker
100° HSS - STRAIGHT SHANK COUNTERSINKS

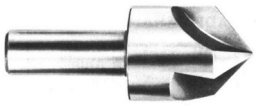

**3-Schneiden**
3-FLUTES

| **Artikel-Nr.** PART NO. | **408A-4** | **408B-4** | **408C-4** | **408D-4** | **408E-4** |
|---|---|---|---|---|---|
| **Körper-Maß** BODY-DIA. | **1/4"** (6,35 mm) | **5/16"** (7,94 mm) | **3/8"** (9,53 mm) | **7/16"** (11,11 mm) | **1/2"** (12,70 mm) |
| **Schaftdurchmesser** SHANK DIAMETER | **3/16"** (4,76 mm) | **1/4"** (6,35 mm) | **1/4"** (6,35 mm) | **1/4"** (6,35 mm) | **1/4"** (6,35 mm) |
| **Gesamtlänge ca.** APPR. O/A LENGTH | **1.1/2"** (38,1 mm) | **1.1/2"** (38,1 mm) | **1.3/4"** (44,5 mm) | **1.3/4"** (44,5 mm) | **2"** (59,8 mm) |

## 100° Mini-Anschlagsenker (Korbsenker)
100° MINIATURE-STOP-COUNTERSINK CUTTER

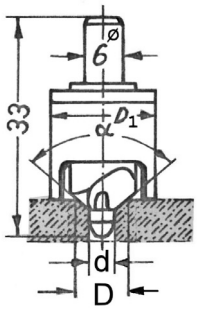


**HSS-E, 2-Schneiden, Schaft 6 mm, Gesamtlänge 33 mm**
**inkl. 1 auswechselbarem Führungszapfen**

HSS-E, 2-FLUTES, SHANK .236, OVER ALL LENGTH 1.19/64"
INCL. 1 REPLACEABLE PILOT

**Norm: LN9199, DIN 65399, AN426, NASM20426**

| **Artikel-Nr.** PART NO. | **402-3/32"** | **402-1/8"** | **402-5/32"** | **402-3/16"** | **402-1/4"** |
|---|---|---|---|---|---|
| **d** | **3/32"** (2,38 mm) | **1/8"** (3,18 mm) | **5/32"** (3,97 mm) | **3/16"** (4,76 mm) | **1/4"** (6,35 mm) |
| **D** | **.1772** (4,50 mm) | **.2244** (5,70 mm) | **.2835** (7,20 mm) | **.3504** (8,90 mm) | **.4764** (12,1 mm) |
| **D1** | **.5118** (13,0 mm) | **.5118** (13,0 mm) | **.5512** (14,0 mm) | **.6229** (15,8 mm) | **.7480** (19,0 mm) |

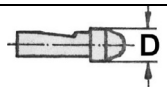


**Führungszapfen für Senker Type 402**
REPLACEABLE PILOT FOR CUTTER TYPE 402

| **Artikel-Nr.** PART NO. | **411-3/32"** | **411-1/8"** | **411-5/32"** | **411-3/16"** | **411-1/4"** |
|---|---|---|---|---|---|

**Andere Abmessungen und Winkel auf Anfrage** / OTHER DIMENSION AND ANGLES ON REQUEST

## Rückzug-Senker Kit 100°
Back Countersink Cutter Kit 100°
HSS / HIGH SPEED STEEL, 4-Schneiden/Flutes

**Artikel-Nr. / Part No.:**

**590TA**



**16 Teile/Pieces Kit**

**Kit includes 8, 100-degree countersinks and 8 pilots:**

5/16" diameter with 1/8" pilot **(402C-4)**
3/8" diameter with 5/32" pilot **(402F-4)**
1/2" diameter with 3/16" pilot **(402I-4)**
3/4" diameter with 1/4" pilot **(402Q-4)**
7/8" diameter with 5/16" pilot **(402S-4)**
1" diameter with 3/8" pilot **(402V-4)**
1.1/4"diameter with 1/2" pilot **(402X-4)**
1/4" diameter with 3/32" pilot **(402B-4)**

## Rückzug-Planfräser Kit
Back Spot Facer Cutter Kit
HSS / HIGH SPEED STEEL, 4-Schneiden/Flutes

**Artikel-Nr. / Part No.:**

**590S**



**16 Teile/Pieces Kit**

**Kit includes 8, 100-degree countersinks and 8 pilots:**

1/4" diameter with 3/32" pilot **(403-A)**
5/16" diameter with 1/8" pilot **(403-C)**
3/8" diameter with 5/32" pilot **(403-F)**
1/2" diameter with 3/16" pilot **(403-I)**
5/8" diameter with 1/4" pilot **(403-M)**
3/4" diameter with 5/16" pilot **(403-R)**
1" diameter with 3/8" pilot **(403-V)**
1 1/4" diameter with 1/2" pilot **(403-X)**

## Rückzug-Senker 100°
BACK COUNTERSINK CUTTERS 100°
**HSS** / HIGH SPEED STEEL

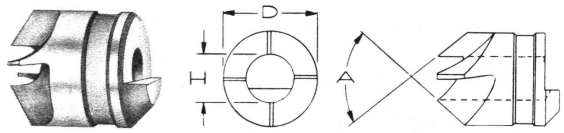


| Artikel-Nr. PART NO. | D = Außenmaß D = BODY DIA | H = Innenmaß H = PILOT HOLE | Schneiden Flutes |
|---|---|---|---|
| **402A-4** | **1/4"** (6,35 mm) | **1/8"** (3,18 mm) | 4 |
| **402B-4** | **1/4"** (6,35 mm) | **3/32"** (2,38 mm) | 4 |
| **180-2J** | **5/16"** (7,94 mm) | **3/32"** (2,38 mm) | 3 |
| **402C-4** | **5/16"** (7,94 mm) | **1/8"** (3,18 mm) | 4 |
| **402D-4** | **5/16"** (7,94 mm) | **5/32"** (3,97 mm) | 4 |
| **180-3J** | **3/8"** (9,53 mm) | **1/8"** (3,18 mm) | 3 |
| **402E-4** | **3/8"** (9,53 mm) | **3/16"** (4,76 mm) | 4 |
| **402F-4** | **3/8"** (9,53 mm) | **5/32"** (3,97 mm) | 4 |
| **180-4J** | **7/16"** (11,11 mm) | **1/8"** (3,18 mm) | 3 |
| **402G-4** | **7/16"** (11,11 mm) | **3/16"** (4,76 mm) | 4 |
| **402H-4** | **7/16"** (11,11 mm) | **5/32"** (3,97 mm) | 4 |
| **180-5J** | **1/2"** (12,70 mm) | **5/32"** (3,97 mm) | 3 |
| **402I-4** | **1/2"** (12,70 mm) | **3/16"** (4,76 mm) | 4 |
| **402J-4** | **1/2"** (12,70 mm) | **1/4"** (6,35 mm) | 4 |
| **180-6J** | **9/16"** (14,29 mm) | **5/32"** (3,97 mm) | 4 |
| **402K-4** | **9/16"** (14,29 mm) | **3/16"** (4,76 mm) | 4 |
| **402L-4** | **9/16"** (14,29 mm) | **1/4"** (6,35 mm) | 4 |
| **180-7J** | **5/8"** (15,88 mm) | **3/16"** (4,76 mm) | 4 |
| **402M-4** | **5/8"** (15,88 mm) | **1/4"** (6,35 mm) | 4 |
| **402N-4** | **5/8"** (15,88 mm) | **5/16"** (7,94 mm) | 4 |
| **180-8J** | **11/16"** (17,46 mm) | **3/16"** (4,76 mm) | 4 |
| **402O-4** | **11/16"** (17,46 mm) | **1/4"** (6,35 mm) | 4 |
| **402P-4** | **11/16"** (17,46 mm) | **5/16"** (7,94 mm) | 4 |
| **402Q-4** | **3/4"** (19,05 mm) | **1/4"** (6,35 mm) | 4 |
| **402R-4** | **3/4"** (19,05 mm) | **5/16"** (7,94 mm) | 4 |
| **180-9L** | **3/4"** (19,05 mm) | **3/8"** (9,53 mm) | 4 |
| **180-10J** | **7/8"** (22,23 mm) | **1/4"** (6,35 mm) | 4 |
| **402S-4** | **7/8"** (22,23 mm) | **5/16"** (7,94 mm) | 4 |
| **402T-4** | **7/8"** (22,23 mm) | **3/8"** (9,53 mm) | 4 |
| **402U-4** | **1"** (25,40 mm) | **5/16"** (7,94 mm) | 4 |
| **402V-4** | **1"** (25,40 mm) | **3/8"** (9,53 mm) | 4 |
| **180-11L** | **1"** (25,40 mm) | **1/2"** (12,7 mm) | 4 |
| **402W-4** | **1.1/4"** (31,75 mm) | **3/8"** (9,53 mm) | 4 |
| **402X-4** | **1.1/4"** (31,75 mm) | **1/2"** (12,7 mm) | 4 |

## Rückzug-Senker 100°
BACK COUNTERSINK CUTTERS 100°
**Vollhartmetall (** HM-bestückt)**
SOLID CARBIDE(** CARBIDE TIPPED)
**3-Schneiden / 3-FLUTES**

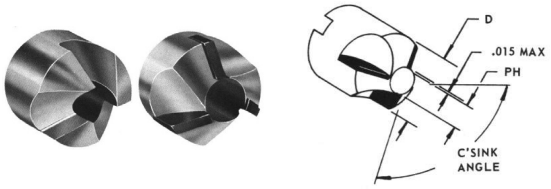


| Artikel-Nr. PART NO. | D = Außenmaß D = BODY DIA | H = Innenmaß H = PILOT HOLE |
|---|---|---|
| **181-1J** | **1/4"** (6,35 mm) | **3/32"** (2,38 mm) |
| **181-1K** | **1/4"** (6,35 mm) | **1/8"** (3,18 mm) |
| **181-2J** | **5/16"** (7,94 mm) | **3/32"** (2,38 mm) |
| **181-2 K** | **5/16"** (7,94 mm) | **1/8"** (3,18 mm) |
| **181-2 L** | **5/16"** (7,94 mm) | **5/32"** (3,97 mm) |
| **181-3J** | **3/8"** (9,53 mm) | **1/8"** (3,18 mm) |
| **181-3K** | **3/8"** (9,53 mm) | **5/32"** (3,97 mm) |
| **181-3L** | **3/8"** (9,53 mm) | **3/16"** (4,76 mm) |
| **181-4J** | **7/16"** (11,11 mm) | **1/8"** (3,18 mm) |
| **181-4K** | **7/16"** (11,11 mm) | **5/32"** (3,97 mm) |
| **181-4L** | **7/16"** (11,11 mm) | **3/16"** (4,76 mm) |
| **181-5J** | **1/2"** (12,70 mm) | **5/32"** (3,97 mm) |
| **181-5K** | **1/2"** (12,70 mm) | **3/16"** (4,76 mm) |
| **181-5L** | **1/2"** (12,70 mm) | **1/4"** (6,35 mm) |
| **181-6J** | **9/16"** (14,29 mm) | **5/32"** (3,97 mm) |
| **181-6K** | **9/16"** (14,29 mm) | **3/16"** (4,76 mm) |
| **181-6L** | **9/16"** (14,29 mm) | **1/4"** (6,35 mm) |
| **181-7J** | **5/8"** (15,88 mm) | **3/16"** (4,76 mm) |
| **181-7K** | **5/8"** (15,88 mm) | **1/4"** (6,35 mm) |
| **181-7L** | **5/8"** (15,88 mm) | **5/16"** (7,94 mm) |
| **181-8J** | **11/16"** (17,46 mm) | **3/16"** (4,76 mm) |
| **181-8K** | **11/16"** (17,46 mm) | **1/4"** (6,35 mm) |
| **181-8L** | **11/16"** (17,46 mm) | **5/16"** (7,94 mm) |
| **181-9J** | **3/4"** (19,05 mm) | **1/4"** (6,35 mm) |
| **181-9K** | **3/4"** (19,05 mm) | **5/16"** (7,94 mm) |
| **181-9L** | **3/4"** (19,05 mm) | **3/8"** (9,53 mm) |
| **181-10J** | **7/8"** (22,23 mm) | **1/4"** (6,35 mm) |
| **181-10K** | **7/8"** (22,23 mm) | **5/16"** (7,94 mm) |
| **181-10L** | **7/8"** (22,23 mm) | **3/8"** (9,53 mm) |
| **181-11J** | **1"** (25,40 mm) | **5/16"** (7,94 mm) |
| **181-11K **** | **1"** (25,40 mm) | **3/8"** (9,53 mm) |
| **181-11L **** | **1"** (25,40 mm) | **1/2"** (12,7 mm) |
| **181-12J **** | **1.1/4"** (31,75 mm) | **3/8"** (9,53 mm) |
| **181-12K **** | **1.1/4"** (31,75 mm) | **1/2"** (12,7 mm) |

**Andere Abmessungen und Winkel auf Anfrage /** OTHER DIMENSION AND ANGLES ON REQUEST

## Rückzug-Planfräser
BACK SPOTFACER CUTTERS
**HSS** / HIGH SPEED STEEL
**4-Schneiden** / 4-FLUTES

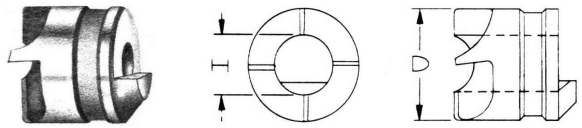


| Artikel-Nr. PART NO. | D = Außenmaß D = BODY DIA | PH = Innenmaß PH = PILOT HOLE |
|---|---|---|
| **403A** | **1/4"** (6,35 mm) | **3/32"** (2,38 mm) |
| **403B** | **1/4"** (6,35 mm) | **1/8"** (3,18 mm) |
| **190-2J** | **5/16"** (7,94 mm) | **3/32"** (2,38 mm) |
| **403C** | **5/16"** (7,94 mm) | **1/8"** (3,18 mm) |
| **403D** | **5/16"** (7,94 mm) | **5/32"** (3,97 mm) |
| **190-3J** | **3/8"** (9,53 mm) | **1/8"** (3,18 mm) |
| **403E** | **3/8"** (9,53 mm) | **3/16"** (4,76 mm) |
| **403F** | **3/8"** (9,53 mm) | **5/32"** (3,97 mm) |
| **190-4J** | **7/16"** (11,11 mm) | **1/8"** (3,18 mm) |
| **403G** | **7/16"** (11,11 mm) | **3/16"** (4,76 mm) |
| **403H** | **7/16"** (11,11 mm) | **5/32"** (3,97 mm) |
| **190-5J** | **1/2"** (12,70 mm) | **5/32"** (3,97 mm) |
| **403I** | **1/2"** (12,70 mm) | **3/16"** (4,76 mm) |
| **403J** | **1/2"** (12,70 mm) | **1/4"** (6,35 mm) |
| **190-6J** | **9/16"** (14,29 mm) | **5/32"** (3,97 mm) |
| **403K** | **9/16"** (14,29 mm) | **3/16"** (4,76 mm) |
| **403L** | **9/16"** (14,29 mm) | **1/4"** (6,35 mm) |
| **190-7J** | **5/8"** (15,88 mm) | **3/16"** (4,76 mm) |
| **403M** | **5/8"** (15,88 mm) | **1/4"** (6,35 mm) |
| **403N** | **5/8"** (15,88 mm) | **5/16"** (7,94 mm) |
| **190-8J** | **11/16"** (17,46 mm) | **3/16"** (4,76 mm) |
| **403O** | **11/16"** (17,46 mm) | **1/4"** (6,35 mm) |
| **403P** | **11/16"** (17,46 mm) | **5/16"** (7,94 mm) |
| **403Q** | **3/4"** (19,05 mm) | **1/4"** (6,35 mm) |
| **403R** | **3/4"** (19,05 mm) | **5/16"** (7,94 mm) |
| **190-9L** | **3/4"** (19,05 mm) | **3/8"** (9,53 mm) |
| **190-10J** | **7/8"** (22,23 mm) | **1/4"** (6,35 mm) |
| **403S** | **7/8"** (22,23 mm) | **5/16"** (7,94 mm) |
| **403T** | **7/8"** (22,23 mm) | **3/8"** (9,53 mm) |
| **403U** | **1"** (25,40 mm) | **5/16"** (7,94 mm) |
| **403V** | **1"** (25,40 mm) | **3/8"** (9,53 mm) |
| **190-11L** | **1"** (25,40 mm) | **1/2"** (12,7 mm) |
| **190-11M** | **1.1/8"** (28,58 mm) | **3/8"** (9,53 mm) |
| **190-11N** | **1.1/8"** (28,58 mm) | **1/2"** (12,7 mm) |
| **403W** | **1.1/4"** (31,75 mm) | **3/8"** (9,53 mm) |
| **403X** | **1.1/4"** (31,75 mm) | **1/2"** (12,7 mm) |

## Rückzug-Planfräser
BACK SPOTFACER CUTTERS
**Vollhartmetall (** HM-bestückt)**
SOLID CARBIDE (** CARBIDE TIPPED)
**4-Schneiden / 4-FLUTES**

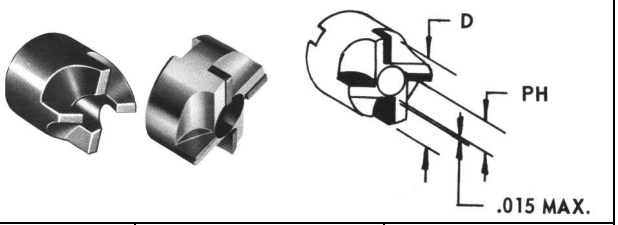


| Artikel-Nr. PART NO. | D = Außenmaß D = BODY DIA | PH = Innenmaß PH = PILOT HOLE |
|---|---|---|
| **191-1J** | **1/4"** (6,35 mm) | **3/32"** (2,38 mm) |
| **191-1K** | **1/4"** (6,35 mm) | **1/8"** (3,18 mm) |
| **191-2J** | **5/16"** (7,94 mm) | **3/32"** (2,38 mm) |
| **191-2 K** | **5/16"** (7,94 mm) | **1/8"** (3,18 mm) |
| **191-2 L** | **5/16"** (7,94 mm) | **5/32"** (3,97 mm) |
| **191-3J** | **3/8"** (9,53 mm) | **1/8"** (3,18 mm) |
| **191-3K** | **3/8"** (9,53 mm) | **5/32"** (3,97 mm) |
| **191-3L** | **3/8"** (9,53 mm) | **3/16"** (4,76 mm) |
| **191-4J** | **7/16"** (11,11 mm) | **1/8"** (3,18 mm) |
| **191-4K** | **7/16"** (11,11 mm) | **5/32"** (3,97 mm) |
| **191-4L** | **7/16"** (11,11 mm) | **3/16"** (4,76 mm) |
| **191-5J** | **1/2"** (12,70 mm) | **5/32"** (3,97 mm) |
| **191-5K** | **1/2"** (12,70 mm) | **3/16"** (4,76 mm) |
| **191-5L** | **1/2"** (12,70 mm) | **1/4"** (6,35 mm) |
| **191-6J** | **9/16"** (14,29 mm) | **5/32"** (3,97 mm) |
| **191-6K** | **9/16"** (14,29 mm) | **3/16"** (4,76 mm) |
| **191-6L** | **9/16"** (14,29 mm) | **1/4"** (6,35 mm) |
| **191-7J** | **5/8"** (15,88 mm) | **3/16"** (4,76 mm) |
| **191-7K** | **5/8"** (15,88 mm) | **1/4"** (6,35 mm) |
| **191-7L** | **5/8"** (15,88 mm) | **5/16"** (7,94 mm) |
| **191-8J** | **11/16"** (17,46 mm) | **3/16"** (4,76 mm) |
| **191-8K** | **11/16"** (17,46 mm) | **1/4"** (6,35 mm) |
| **191-8L** | **11/16"** (17,46 mm) | **5/16"** (7,94 mm) |
| **191-9J** | **3/4"** (19,05 mm) | **1/4"** (6,35 mm) |
| **191-9K** | **3/4"** (19,05 mm) | **5/16"** (7,94 mm) |
| **191-9L** | **3/4"** (19,05 mm) | **3/8"** (9,53 mm) |
| **191-10J** | **7/8"** (22,23 mm) | **1/4"** (6,35 mm) |
| **191-10K** | **7/8"** (22,23 mm) | **5/16"** (7,94 mm) |
| **191-10L** | **7/8"** (22,23 mm) | **3/8"** (9,53 mm) |
| **191-11J** | **1"** (25,40 mm) | **5/16"** (7,94 mm) |
| **191-11K** | **1"** (25,40 mm) | **3/8"** (9,53 mm) |
| **191-11L** | **1"** (25,40 mm) | **1/2"** (12,7 mm) |
| **191-11M **** | **1.1/8"** (28,58 mm) | **3/8"** (9,53 mm) |
| **191-11N **** | **1.1/8"** (28,58 mm) | **1/2"** (12,7 mm) |
| **191-12J **** | **1.1/4"** (31,75 mm) | **3/8"** (9,53 mm) |
| **191-12K **** | **1.1/4"** (31,75 mm) | **1/2"** (12,7 mm) |

**Andere Abmessungen und Winkel auf Anfrage /** OTHER DIMENSION AND ANGLES ON REQUEST

# Führungsstangen für Rückzug-Senker und Rückzug-Planfräser
# Serie 180 - 181 - 190 - 191 - 402 - 403

PILOTS FOR BACK COUNTERSINK CUTTERS & BACK SPOTFACER CUTTERS
SERIES 180 - 181 - 190 - 191 - 402 - 403

## Standard Führungsstangen / PLAIN PILOTS

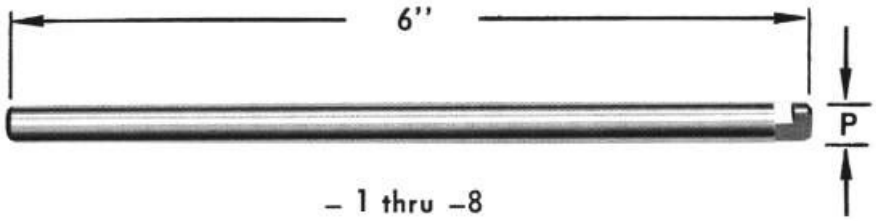


| Artikel-Nr. PART NO. | P = Durchmesser P = PILOT DIA | | Artikel-Nr. PART NO. | P = Durchmesser P = PILOT DIA | | Artikel-Nr. PART NO. | P = Durchmesser P = PILOT DIA |
|---|---|---|---|---|---|---|---|
| **185-1** | **3/32"** (2,38 mm) | | **185-4** | **3/16"** (4,76 mm) | | **185-7** | **3/8"** (9,53 mm) |
| **185-2** | **1/8"** (3,18 mm) | | **185-5** | **1/4"** (6,35 mm) | | **185-8** | **1/2"** (12,7 mm) |
| **185-3** | **5/32"** (3,97 mm) | | **185-6** | **5/16"** (7,94 mm) | | | |

## Abgesetzte Führungsstangen / STEP PILOTS

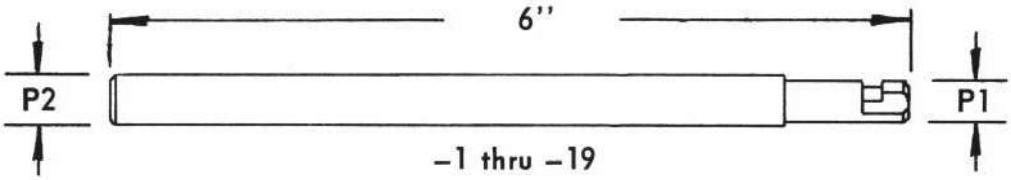


| Artikel-Nr. PART NO. | P1 | P2 | Nur geeignet für Fräserdurchmesser : ONLY FOR USE WITH CUTTER DIAMETER : |
|---|---|---|---|
| **186-1** | **3/32"** (2,38 mm) | **1/8"** (3,18 mm) | **1/4" - 5/16"** |
| **186-2** | **1/8"** (3,18 mm) | **5/32"** (3,97 mm) | **1/4" - 5/16" - 3/8" - 7/16"** |
| **186-3** | **5/32"** (3,97 mm) | **3/16"** (4,76 mm) | **5/16" - 3/8" - 7/16" - 1/2"** |
| **186-4** | **3/16"** (4,76 mm) | **1/4"** (6,35 mm) | **3/8" - 7/16" - 1/2"** |
| **186-5** | **1/4"** (6,35 mm) | **5/16"** (7,94 mm) | **1/2"** |
| **186-6** | **5/32"** (3,97 mm) | **3/16"** (4,76 mm) | **9/16"** |
| **186-7** | **3/16"** (4,76 mm) | **1/4"** (6,35 mm) | **9/16" - 5/8" - 11/16"** |
| **186-8** | **1/4"** (6,35 mm) | **5/16"** (7,94 mm) | **9/16" - 5/8" - 11/16" - 3/4"** |
| **186-9** | **5/16"** (7,94 mm) | **3/8"** (9,53 mm) | **5/8" - 11/16" - 3/4" - 7/8"** |
| **186-10** | **3/8"** (9,53 mm) | **1/2"** (12,7 mm) | **3/4" - 7/8" - 1"** |
| **186-11** | **1/2"** (12,7 mm) | **9/16"** (14,29 mm) | **1"** |
| **186-16** | **3/8"** (9,53 mm) | **1/2"** (12,7 mm) | **1.1/8" - 1.1/4"** |
| **186-17** | **1/2"** (12,7 mm) | **9/16"** (14,29 mm) | **1.1/8" - 1.1/4"** |

**Andere Abmessungen auf Anfrage** / OTHER DIMENSIONS ON REQUEST

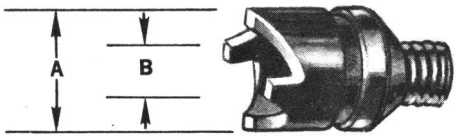


## HSS-Hohlfräser
## mit Gewinde-Schaft 1/4"-28
HSS-HOLLOW-CUTTERS
WITH THREADED SHANK 1/4"-28

| **Artikel-Nr.** PART NO. | **A = Außendurchmesser** A = OUTSIDE DIAMETER | **B = Innendurchmesser** B = INSIDE DIAMETER | **Nietart & Nenngröße** FASTENER & SIZE |
|---|---|---|---|
| **493C-0** | **.365** (9,27 mm) | **.124** (3,15 mm) | **Hi-Shear Rivet 1/8"** (3,18 mm) |
| **493C-00** | **.365** (9,27 mm) | **.157** (3,99 mm) | **Hi-Shear Rivet 5/32"** (3,97 mm) |
| **493C-1** | **.438** (11,13 mm) | **.1875** (4,76 mm) | **Hi-Shear Rivet 3/16"** (4,76 mm) |
| **493C-2** | **.500** (12,70 mm) | **.247** (6,27 mm) | **Hi-Shear Rivet 1/4"** (6,35 mm) |
| **493C-3** | **.562** (14,27 mm) | **.310** (7,87 mm) | **Hi-Shear Rivet 5/16"** (7,94 mm) |
| **493C-4** | **.625** (15,88 mm) | **.373** (9,47 mm) | **Hi-Shear Rivet 3/8"** (9,53 mm) |
| **493D-1** | **.323** (8,20 mm) | **.1875** (4,76 mm) | **Huck Bolt L6** |
| **493D-3** | **.413** (10,49 mm) | **.250** (6,35 mm) | **Huck Bolt L8** |



## HSS-Lochsägen mit grober Verzahnung für Aluminium und Stahl
HSS-HOLE SAWS WITH COARSE TOOTH
FOR ALUMINUM AND STEEL

| **Gewinde** / THREAD **5/16"-24** | | **Gewinde** / THREAD **1/2"-20** | | **Gewinde** / THREAD **1/2"-20** | |
|---|---|---|---|---|---|
| **Artikel-Nr.** PART NO. | **Durchmesser** DIAMETER | **Artikel-Nr.** PART NO. | **Durchmesser** DIAMETER | **Artikel-Nr.** PART NO. | **Durchmesser** DIAMETER |
| **474-3** | **1/2"** (12,70 mm) | **474-16** | **1.5/16"** (33,34 mm) | **474-29** | **2.1/8"** (53,98 mm) |
| **474-4** | **9/16"** (14,29 mm) | **474-17** | **1.3/8"** (34,93 mm) | **474-30** | **2.3/16"** (55,56 mm) |
| **474-5** | **5/8"** (15,88 mm) | **474-18** | **1.7/16"** (36,51 mm) | **474-31** | **2.1/4"** (57,15 mm) |
| **474-6** | **11/16"** (17,46 mm) | **474-19** | **1.1/2"** (38,10 mm) | **474-32** | **2.5/16"** (58,74 mm) |
| **474-7** | **3/4"** (19,05 mm) | **474-20** | **1.9/16"** (39,69 mm) | **474-33** | **2.3/8"** (60,33 mm) |
| **474-8** | **13/16"** (20,64 mm) | **474-21** | **1.5/8"** (41,28 mm) | **474-35** | **2.1/2"** (63,50 mm) |
| **474-9** | **7/8"** (22,23 mm) | **474-22** | **1.11/16"** (42,86 mm) | **474-38** | **2.11/16"** (68,26 mm) |
| **474-10** | **15/16"** (23,81 mm) | **474-23** | **1.3/4"** (44,45 mm) | **474-39** | **2.3/4"** (69,85 mm) |
| **474-11** | **1"** (25,40 mm) | **474-24** | **1.13/16"** (46,04 mm) | **474-40** | **2.13/16"** (71,44 mm) |
| **474-12** | **1.1/16"** (26,99 mm) | **474-25** | **1.7/8"** (47,63 mm) | **474-41** | **2.7/8"** (73,03 mm) |
| **474-13** | **1.1/8"** (28,58 mm) | **474-26** | **1.15/16"** (49,21 mm) | **474-43** | **3"** (76,20 mm) |
| **474-14** | **1.3/16"** (30,16 mm) | **474-27** | **2"** (50,80 mm) | | |
| **474-15** | **1.1/4"** (31,75 mm) | **474-28** | **2.1/16"** (52,39 mm) | | |

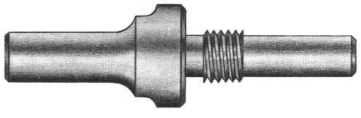

## Halter mit Führung für Lochsägen Serie 474
HOLE SAW ARBOR FOR SERIE 474

| **Artikel-Nr.** PART NO. | **Schaftart & Durchmesser** SHANK TYPE & SIZE | **Zapfendurchmesser** PILOT DIAMETER | **Gewindeabmessung THREAD SIZE** |
|---|---|---|---|
| **415-0** | **1/4" DIA.** (6,35 mm Rund) | **3/16"** (4,76 mm) | **5/16"-24** |
| **415-1** | **1/4" DIA.** (6,35 mm Rund) | **1/4"** (6,35 mm) | **5/16"-24** |
| **415-2** | **1/2" DIA.** (12,70 mm Rund) | **1/4"** (6,35 mm) | **1/2"-20** |
| **415-3** | **1/2" DIA.** (12,70 mm Rund) | **3/8"** (9,53 mm) | **1/2"-20** |
| **415-10** | **1/4" DIA.** (6,35 mm Rund) | **1/4"** (6,35 mm) | **1/2"-20** |
| **415-11** | **1/4" DIA.** (6,35 mm Rund) | **3/8"** (9,53 mm) | **1/2"-20** |

# HM-bestückte Lochsägen "GP Integral" Metrisch/Zoll

## CARBIDE TIPPED HOLE SAWS "GP INTEGRAL" METRIC/INCH



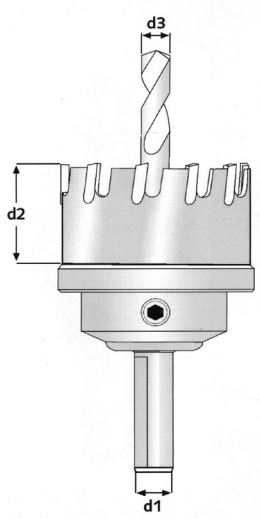


| Art.Nr. P/N | D mm | d1 mm | d2 mm | d3 mm | Art.Nr. P/N | D mm | d1 mm | d2 mm | d3 mm |
|---|---|---|---|---|---|---|---|---|---|
| CT16 | 16 | 10 | 15 | 6 | CT51 | 51 | 10 | 15 | 6 |
| CT17 | 17 | 10 | 15 | 6 | CT52 | 52 | 13 | 15 | 6 |
| CT18 | 18 | 10 | 15 | 6 | CT53 | 53 | 13 | 15 | 6 |
| CT19 | 19 | 10 | 15 | 6 | CT54 | 54 | 13 | 15 | 6 |
| CT20 | 20 | 10 | 15 | 6 | CT55 | 55 | 13 | 15 | 6 |
| CT21 | 21 | 10 | 15 | 6 | CT56 | 56 | 13 | 15 | 6 |
| CT22 | 22 | 10 | 15 | 6 | CT57 | 57 | 13 | 15 | 6 |
| CT23 | 23 | 10 | 15 | 6 | CT58 | 58 | 13 | 15 | 6 |
| CT24 | 24 | 10 | 15 | 6 | CT59 | 59 | 13 | 15 | 6 |
| CT25 | 25 | 10 | 15 | 6 | CT60 | 60 | 13 | 15 | 6 |
| CT26 | 26 | 10 | 15 | 6 | CT61 | 61 | 13 | 15 | 6 |
| CT27 | 27 | 10 | 15 | 6 | CT62 | 62 | 13 | 15 | 6 |
| CT28 | 28 | 10 | 15 | 6 | CT63 | 63 | 13 | 15 | 6 |
| CT29 | 29 | 10 | 15 | 6 | CT64 | 64 | 13 | 15 | 6 |
| CT30 | 30 | 10 | 15 | 6 | CT65 | 65 | 13 | 15 | 6 |
| CT31 | 31 | 10 | 15 | 6 | CT66 | 66 | 13 | 15 | 6 |
| CT32 | 32 | 10 | 15 | 6 | CT67 | 67 | 13 | 15 | 6 |
| CT33 | 33 | 10 | 15 | 6 | CT68 | 68 | 13 | 15 | 6 |
| CT34 | 34 | 10 | 15 | 6 | CT69 | 69 | 13 | 15 | 6 |
| CT35 | 35 | 10 | 15 | 6 | CT70 | 70 | 13 | 15 | 6 |
| CT36 | 36 | 10 | 15 | 6 | CT71 | 71 | 13 | 15 | 6 |
| CT37 | 37 | 10 | 15 | 6 | CT72 | 72 | 13 | 15 | 6 |
| CT38 | 38 | 10 | 15 | 6 | CT73 | 73 | 13 | 15 | 6 |
| CT39 | 39 | 10 | 15 | 6 | CT74 | 74 | 13 | 15 | 6 |
| CT40 | 40 | 10 | 15 | 6 | CT75 | 75 | 13 | 15 | 6 |
| CT41 | 41 | 10 | 15 | 6 | CT76 | 76 | 13 | 15 | 6 |
| CT42 | 42 | 10 | 15 | 6 | CT77 | 77 | 13 | 15 | 6 |
| CT43 | 43 | 10 | 15 | 6 | CT78 | 78 | 13 | 15 | 6 |
| CT44 | 44 | 10 | 15 | 6 | CT79 | 79 | 13 | 15 | 6 |
| CT45 | 45 | 10 | 15 | 6 | CT80 | 80 | 13 | 15 | 6 |
| CT46 | 46 | 10 | 15 | 6 | CT85 | 85 | 13 | 15 | 6 |
| CT47 | 47 | 10 | 15 | 6 | CT90 | 90 | 13 | 15 | 6 |
| CT48 | 48 | 10 | 15 | 6 | CT95 | 95 | 13 | 15 | 6 |
| CT49 | 49 | 10 | 15 | 6 | CT100 | 100 | 13 | 15 | 6 |
| CT50 | 50 | 10 | 15 | 6 | | | | | |

**Ersatzbohrer für GP Integral Lochsägen**
REPLACEMENT DRILL FOR GP INTEGRAL HOLE SAWS



| Art.Nr. P/N | Durchmesser DIA | Länge LENGTH |
|---|---|---|
| PCT6 | 6,35 mm | 60 mm |

**Andere Abmessungen auf Anfrage** / OTHER DIMENSIONS ON REQUEST

## Plansenker mit geradem Schaft für auswechselbare Führungszapfen
## COUNTERBORES WITH STRAIGHT SHANK AND HOLE FOR REPLACEABLE PILOTS

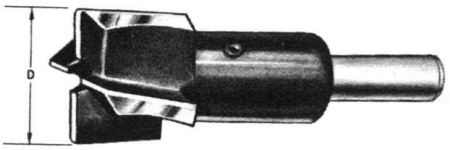


**488C**

**HSS-Schnellarbeitsstahl**
HSS-HIGH SPEED STEEL
**Führungszapfen Serie 489...**
PILOTS SERIE 489...

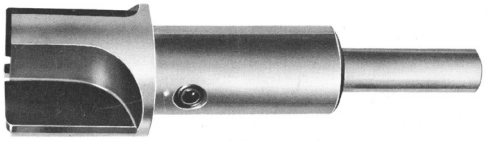

**850**

**Hartmetall bestück**
CARBIDE TIPPED
**Führungszapfen Serie 855...**
PILOTS SERIE 855...

| **Artikel-Nr.** PART NO. | **Artikel-Nr.** PART NO. | **D = Durchmesser** D = BODY-DIA. | **Bohrung für Zapfen** PILOT HOLE DIA. | **Schaftabmessung** SHANK DIAMETER | **Gesamtlänge** OVER ALL LENGTH |
|---|---|---|---|---|---|
| **488C-0** | **-------** | **3/16"** (4,76 mm) | **3/32"** (2,38 mm) | **1/4"** (6,35 mm) | **2.3/8"** (60,3 mm) |
| **488C-1** | **850-1** | **1/4"** (6,35 mm) | **3/32"** (2,38 mm) | **1/4"** (6,35 mm) | **2.3/8"** (60,3 mm) |
| **488C-2** | **850-2** | **9/32"** (7,14 mm) | **3/32"** (2,38 mm) | **1/4"** (6,35 mm) | **2.3/8"** (60,3 mm) |
| **488C-3** | **850-3** | **5/16"** (7,94 mm) | **3/32"** (2,38 mm) | **1/4"** (6,35 mm) | **2.3/8"** (60,3 mm) |
| **488C-4** | **850-4** | **11/32"** (8,73 mm) | **3/32"** (2,38 mm) | **1/4"** (6,35 mm) | **2.3/8"** (60,3 mm) |
| **488C-5** | **850-5** | **3/8"** (9,53 mm) | **3/32"** (2,38 mm) | **1/4"** (6,35 mm) | **2.3/8"** (60,3 mm) |
| **488C-6** | **850-6** | **13/32"** (10,32 mm) | **1/8"** (3,18 mm) | **1/4"** (6,35 mm) | **2.3/4"** (69,9 mm) |
| **488C-7** | **850-7** | **7/16"** (11,11 mm) | **1/8"** (3,18 mm) | **1/4"** (6,35 mm) | **2.3/4"** (69,9 mm) |
| **488C-8** | **850-8** | **15/32"** (11,91 mm) | **1/8"** (3,18 mm) | **1/4"** (6,35 mm) | **2.3/4"** (69,9 mm) |
| **488C-9** | **850-9** | **1/2"** (12,70 mm) | **1/8"** (3,18 mm) | **1/4"** (6,35 mm) | **2.3/4"** (69,9 mm) |
| **488C-10** | **850-10** | **17/32"** (13,49 mm) | **1/8"** (3,18 mm) | **1/4"** (6,35 mm) | **2.3/4"** (69,9 mm) |
| **488C-11** | **850-11** | **9/16"** (14,29 mm) | **1/8"** (3,18 mm) | **1/4"** (6,35 mm) | **2.3/4"** (69,9 mm) |
| **488C-12** | **850-12** | **19/32"** (15,08 mm) | **1/8"** (3,18 mm) | **1/4"** (6,35 mm) | **2.3/4"** (69,9 mm) |
| **488C-13** | **850-13** | **5/8"** (15,88 mm) | **1/8"** (3,18 mm) | **1/4"** (6,35 mm) | **2.3/4"** (69,9 mm) |
| **488C-14** | **850-14** | **21/32"** (16,67 mm) | **3/16"** (4,76 mm) | **1/4"** (6,35 mm) | **2.3/4"** (69,9 mm) |
| **488C-15** | **850-15** | **11/16"** (17,46 mm) | **3/16"** (4,76 mm) | **1/4"** (6,35 mm) | **2.3/4"** (69,9 mm) |
| **488C-16** | **850-16** | **23/32"** (18,26 mm) | **3/16"** (4,76 mm) | **1/4"** (6,35 mm) | **2.3/4"** (69,9 mm) |
| **488C-17** | **850-17** | **3/4"** (19,05 mm) | **3/16"** (4,76 mm) | **1/4"** (6,35 mm) | **2.3/4"** (69,9 mm) |
| **488C-18** | **850-18** | **25/32"** (19,84 mm) | **3/16"** (4,76 mm) | **1/4"** (6,35 mm) | **2.3/4"** (69,9 mm) |
| **488C-19** | **850-19** | **13/16"** (20,64 mm) | **3/16"** (4,76 mm) | **1/4"** (6,35 mm) | **2.3/4"** (69,9 mm) |
| **488C-20** | **850-20** | **27/32"** (21,43 mm) | **3/16"** (4,76 mm) | **1/4"** (6,35 mm) | **2.3/4"** (69,9 mm) |
| **488C-21** | **850-21** | **7/8"** (22,23 mm) | **3/16"** (4,76 mm) | **1/4"** (6,35 mm) | **2.3/4"** (69,9 mm) |
| **488C-22** | **850-22** | **29/32"** (23,02 mm) | **3/16"** (4,76 mm) | **1/4"** (6,35 mm) | **2.3/4"** (69,9 mm) |
| **488C-23** | **850-23** | **15/16"** (23,81 mm) | **3/16"** (4,76 mm) | **1/4"** (6,35 mm) | **2.3/4"** (69,9 mm) |
| **488C-24** | **850-24** | **31/32"** (24,61 mm) | **3/16"** (4,76 mm) | **1/4"** (6,35 mm) | **2.3/4"** (69,9 mm) |
| **488C-25** | **850-25** | **1"** (25,40 mm) | **3/16"** (4,76 mm) | **1/4"** (6,35 mm) | **2.3/4"** (69,9 mm) |
| **488C-26** | **850-26** | **1.1/16"** (26,99 mm) | **3/16"** (4,76 mm) | **3/8"** (9,35 mm) | **2.3/4"** (69,9 mm) |
| **488C-27** | **850-27** | **1.1/8"** (28,58 mm) | **3/16"** (4,76 mm) | **3/8"** (9,35 mm) | **2.3/4"** (69,9 mm) |
| **488C-28** | **850-28** | **1.3/16"** (30,16 mm) | **3/16"** (4,76 mm) | **3/8"** (9,35 mm) | **2.3/4"** (69,9 mm) |
| **488C-29** | **850-29** | **1.1/4"** (31,75 mm) | **488C / 3/16"** (4,76 mm)<br>**850 / 1/4"** (6,35 mm) | **3/8"** (9,35 mm) | **2.3/4"** (69,9 mm) |
| **488C-30** | **850-30** | **1.5/16"** (33,34 mm) | **488C / 3/16"** (4,76 mm)<br>**850 / 1/4"** (6,35 mm) | **3/8"** (9,35 mm) | **2.3/4"** (69,9 mm) |
| **488C-31** | **850-31** | **1.3/8"** (34,93 mm) | **488C / 3/16"** (4,76 mm)<br>**850 / 1/4"** (6,35 mm) | **3/8"** (9,35 mm) | **2.3/4"** (69,9 mm) |
| **488C-32** | **850-32** | **1.1/2"** (38,10 mm) | **488C / 3/16"** (4,76 mm)<br>**850 / 1/4"** (6,35 mm) | **3/8"** (9,35 mm) | **2.3/4"** (69,9 mm) |

**Andere Abmessungen auf Anfrage** / OTHER DIMENSIONS ON REQUEST

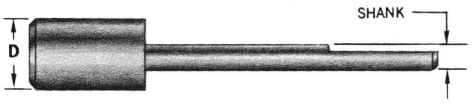


## Führungszapfen für Senker Serie 488C

REPLACEABLE PILOTS FOR CUTTER SERIES 488C

| **Nenngröße /** SIZE | **D** | **Schaft** / SHANK **3/32"** (2,38 mm) | **Schaft** / SHANK **1/8"** (3,18 mm) | **Schaft** / SHANK **3/16"** (4,76 mm) |
|---|---|---|---|---|
| **3/32"** (2,38 mm) | **.093** (2,36 mm) | **489A-1** | | |
| **1/8"** (3,18 mm) | **.124** (3,15 mm) | **489A-2** | **489B-2** | |
| **5/32"** (3,97 mm) | **.154** (3,91 mm) | **489A-3** | **489B-3** | |
| **#20** (4,09 mm) | **.159** (4,04 mm) | **489A-4** | **489B-4** | |
| **3/16"** (4,76 mm) | **.186** (4,72 mm) | **489A-5** | **489B-5** | **489C-5** |
| **#10** (4,91 mm) | **.1915** (4,86 mm) | **489A-6** | **489B-6** | **489C-6** |
| **7/32"** (5,56 mm) | **.2167** (5,50 mm) | **489A-7** | **489B-7** | **489C-7** |
| **1/4"** (6,35 mm) | **.248** (6,30 mm) | **489A-8** | **489B-8** | **489C-8** |
| **"F"** (6,53 mm) | **.255** (6,48 mm) | **489A-9** | **489B-9** | **489C-9** |
| **9/32"** (7,14 mm) | **.279** (7,09 mm) | **489A-10** | **489B-10** | **489C-10** |
| **5/16"** (7,94 mm) | **.3105** (7,89 mm) | **489A-11** | **489B-11** | **489C-11** |
| **11/32"** (8,73 mm) | **.3415** (8,67 mm) | | **489B-12** | **489C-12** |
| **3/8"** (9,53 mm) | **.373** (9,47 mm) | | **489B-13** | **489C-13** |
| **13/32"** (10,32 mm) | **.404** (10,26 mm) | | **489B-14** | **489C-14** |
| **7/16"** (11,11 mm) | **.4355** (11,06 mm) | | **489B-15** | **489C-15** |
| **15/32"** (11,91 mm) | **.4665** (11,85 mm) | | **489B-16** | **489C-16** |
| **1/2"** (12,70 mm) | **.498** (12,65 mm) | | **489B-17** | **489C-17** |
| **17/32"** (13,49 mm) | **.529** (13,44 mm) | | | **489C-18** |
| **9/16"** (14,29 mm) | **.560** (14,22 mm) | | | **489C-19** |
| **19/32"** (15,08 mm) | **.591** (15,01 mm) | | | **489C-20** |
| **5/8"** (15,88 mm) | **.622** (15,80 mm) | | | **489C-21** |
| **21/32"** (16,67 mm) | **.653** (16,59 mm) | | | **489C-22** |
| **11/16"** (17,46 mm) | **.685** (17,40 mm) | | | **489C-23** |
| **23/32"** (18,26 mm) | **.716** (18,19 mm) | | | **489C-24** |
| **3/4"** (19,05 mm) | **.747** (18,97 mm) | | | **489C-25** |

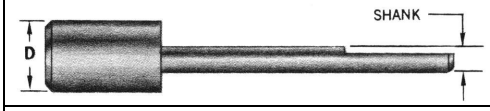


## Führungszapfen für Senker Serie 850

REPLACEABLE PILOTS FOR CUTTER SERIES 850

| **Nenngröße /** SIZE | **D** | **Schaft** / SHANK **3/32"** (2,38 mm) | **Schaft** / SHANK **1/8"** (3,18 mm) | **Schaft** / SHANK **3/16"** (4,76 mm) |
|---|---|---|---|---|
| **3/32"** (2,38 mm) | **.093** (2,36 mm) | **855-1-3/32"** | | |
| **1/8"** (3,18 mm) | **.124** (3,15 mm) | **855-2-3/32"** | **855-2-1/8"** | |
| **5/32"** (3,97 mm) | **.154** (3,91 mm) | **855-3-3/32"** | **855-3-1/8"** | |
| **#20** (4,09 mm) | **.159** (4,04 mm) | **855-4-3/32"** | **855-4-1/8"** | |
| **3/16"** (4,76 mm) | **.186** (4,72 mm) | **855-5-3/32"** | **855-5-1/8"** | **855-5-3/16"** |
| **#10** (4,91 mm) | **.1915** (4,86 mm) | **855-6-3/32"** | **855-6-1/8"** | **855-6-3/16"** |
| **7/32"** (5,56 mm) | **.2167** (5,50 mm) | **855-7-3/32"** | **855-7-1/8"** | **855-7-3/16"** |
| **1/4"** (6,35 mm) | **.248** (6,30 mm) | **855-8-3/32"** | **855-8-1/8"** | **855-8-3/16"** |
| **"F"** (6,53 mm) | **.255** (6,48 mm) | **855-9-3/32"** | **855-9-1/8"** | **855-9-3/16"** |
| **9/32"** (7,14 mm) | **.279** (7,09 mm) | | **855-10-1/8"** | **855-10-3/16"** |
| **5/16"** (7,94 mm) | **.3105** (7,89 mm) | | **855-11-1/8"** | **855-11-3/16"** |
| **11/32"** (8,73 mm) | **.3415** (8,67 mm) | | | **855-12-3/16"** |
| **3/8"** (9,53 mm) | **.373** (9,47 mm) | | | **855-13-3/16"** |
| **13/32"** (10,32 mm) | **.404** (10,26 mm) | | | **855-14-3/16"** |
| **7/16"** (11,11 mm) | **.4355** (11,06 mm) | | | **855-15-3/16"** |
| **15/32"** (11,91 mm) | **.4665** (11,85 mm) | | | **855-16-3/16"** |
| **1/2"** (12,70 mm) | **.498** (12,65 mm) | | | **855-17-3/16"** |
| **17/32"** (13,49 mm) | **.529** (13,44 mm) | | | **855-18-3/16"** |
| **9/16"** (14,29 mm) | **.560** (14,22 mm) | | | **855-19-3/16"** |
| **19/32"** (15,08 mm) | **.591** (15,01 mm) | | | **855-20-3/16"** |
| **5/8"** (15,88 mm) | **.622** (15,80 mm) | | | **855-21-3/16"** |

**Andere Abmessungen auf Anfrage** / OTHER DIMENSIONS ON REQUEST !

# Hartmetall-bestückte Plansenker für Anschlaghalter
## CARBIDE TIPPED STOP COUNTERBORES



**Für auswechselbare Führungszapfen**
FOR REPLACEABLE PILOTS

SERIES 730

**Radius 0,40 mm**
**Max. nicht senkbarer Bereich ist 0,79 mm größer als die Pilot-Bohrung ! Zapfen bitte 0,79 mm größer als das Maß der Pilot-Bohrung bestellen !**
RADIUS 1/64"
MAX. NONCUTTING DIAMETER IS 1/32" LARGER THAN PILOT HOLE ! USE PILOTS WITH HEAD DIAMETER 1/32" LARGER THAN PILOT HOLE !

| **Artikel-Nr.** PART NO. | **Körper-Maß** BODY-DIA. | **Bohrung** PILOT HOLE | **Gewinde** THREAD |
|---|---|---|---|
| **730-1** | **3/8"** (9,53 mm) | **3/32"** (2,38 mm) | **1/4"-28** |
| **730-2** | **7/16"** (11,11 mm) | **1/8"** (3,18 mm) | **1/4"-28** |
| **730-3** | **1/2"** (12,70 mm) | **1/8"** (3,18 mm) | **1/4"-28** |
| **730-4** | **9/16"** (14,29 mm) | **1/8"** (3,18 mm) | **1/4"-28** |
| **730-5** | **5/8"** (15,88 mm) | **1/8"** (3,18 mm) | **1/4"-28** |
| **730-6A** | **11/16"** (17,46 mm) | **3/16"** (4,76 mm) | **3/8"-24** |
| **730-6B** | **11/16"** (17,46 mm) | **3/16"** (4,76 mm) | **7/16"-20** |
| **730-7A** | **3/4"** (19,05 mm) | **3/16"** (4,76 mm) | **3/8"-24** |
| **730-7B** | **3/4"** (19,05 mm) | **3/16"** (4,76 mm) | **7/16"-20** |
| **730-8A** | **13/16"** (20,64 mm) | **3/16"** (4,76 mm) | **3/8"-24** |
| **730-8B** | **13/16"** (20,64 mm) | **3/16"** (4,76 mm) | **7/16"-20** |
| **730-9A** | **7/8"** (22,23 mm) | **3/16"** (4,76 mm) | **3/8"-24** |
| **730-9B** | **7/8"** (22,23 mm) | **3/16"** (4,76 mm) | **7/16"-20** |
| **730-10A** | **15/16"** (23,81 mm) | **3/16"** (4,76 mm) | **3/8"-24** |
| **730-10B** | **15/16"** (23,81 mm) | **3/16"** (4,76 mm) | **7/16"-20** |
| **730-11A** | **1"** (25,40 mm) | **3/16"** (4,76 mm) | **3/8"-24** |
| **730-11B** | **1"** (25,40 mm) | **3/16"** (4,76 mm) | **7/16"-20** |
| **730-12A** | **1.1/8"** (28,58 mm) | **3/16"** (4,76 mm) | **3/8"-24** |
| **730-12B** | **1.1/8"** (28,58 mm) | **3/16"** (4,76 mm) | **7/16"-20** |
| **730-13A** | **1.1/4"** (31,75 mm) | **3/16"** (4,76 mm) | **3/8"-24** |
| **730-13B** | **1.1/4"** (31,75 mm) | **3/16"** (4,76 mm) | **7/16"-20** |




## Führungszapfen für Plansenker Serie 730...
PILOTS FOR COUNTERSINK CUTTER SERIES 730...
**Standard Kombinationen /** STANDARD COMBINATIONS

| **D** = **S** | **3/32"** (2,38 mm) | **1/8"** (3,18 mm) | **3/16"** (4,76 mm) |
|---|---|---|---|
| **1/8"** (3,18 mm) | **755-1-3/32"** | | |
| **#30** (3,26 mm) | **755-2-3/32"** | | |
| **5/32"** (3,97 mm) | **755-3-3/32"** | **755-3-1/8"** | |
| **#20** (4,09 mm) | **755-4-3/32"** | **755-4-1/8"** | |
| **3/16"** (4,76 mm) | **755-5-3/32"** | **755-5-1/8"** | |
| **#10** (4,91 mm) | **755-6-3/32"** | **755-6-1/8"** | |
| **7/32"** (5,56 mm) | **755-7-3/32"** | **755-7-1/8"** | **755-7-3/16"** |
| **1/4"** (6,35 mm) | **755-8-3/32"** | **755-8-1/8"** | **755-8-3/16"** |
| **"F"** (6,53 mm) | **755-9-3/32"** | **755-9-1/8"** | **755-9-3/16"** |
| **9/32"** (7,14 mm) | | **755-10-1/8"** | **755-10-3/16"** |
| **5/16"** (7,94 mm) | | **755-11-1/8"** | **755-11-3/16"** |
| **11/32"** (8,73 mm) | | | **755-12-3/16"** |
| **3/8"** (9,53 mm) | | | **755-13-3/16"** |
| **13/32"** (10,32 mm) | | | **755-14-3/16"** |
| **7/16"** (11,11 mm) | | | **755-15-3/16"** |
| **15/32"** (11,91 mm) | | | **755-16-3/16"** |
| **1/2"** (12,70 mm) | | | **755-17-3/16"** |
| **17/32"** (13,49 mm) | | | **755-18-3/16"** |
| **9/16"** (14,29 mm) | | | **755-19-3/16"** |
| **19/32"** (15,08 mm) | | | **755-20-3/16"** |
| **5/8"** (15,88 mm) | | | **755-21-3/16"** |

**Andere Abmessungen auf Anfrage /** OTHER DIMENSION ON REQUEST

# Waben-Fräser
# HONEYCOMB CUTTERS

## 30-000

## Replaceable Ring Type Honeycomb Cutter



These tools are for contouring, carving and chamfering cuts of .25" or less. The unique patented holding system prevents the solid carbide blades from coming out of the holder if it is fractured.

The HSS saw blades and the diamond plated blades dish on the bottom so they clear the cut core finish like the hollow ground solid carbide style rings. The solid carbide rings may be reground several times at the factory making them very economical to use.

The HSS saw and diamond plated blades are disposable, offering the convenience of a constant diameter.

**Usage** For contouring, carving and chamfering cuts

| SHANK ASSEMBLY | | | CUTTING BLADE OPTIONS | | | | SPARE PARTS | |
|---|---|---|---|---|---|---|---|---|
| Part # | Blade Diameter | Shank DIA | Solid Carbide | Solid Carbide with Teeth | Diamond Plated | HSS Saw | Adapter Ring | Screw |
| 30-011 | 1” (25.4mm) | 1/2 | 30-012 | 30-313 | 30-112 | 30-213 | - | 30-011-2 |
| 30-021 | 2” (50.8mm) | 1/2 | 30-022 | 30-322 | 30-122 | 30-222 | 30-020-3 | 30-020-4 |
| 30-031 | 3” (76.2mm) | 1/2 | 30-032 | 30-332 | 30-132 | 30-232 | 30-030-3 | 30-030-4 |
| 30-041 | 4” (101.6mm) | 1/2 | 30-042 | 30-342 | 30-142 | 30-242 | 30-040-3 | 30-040-4 |

## 31-000

## High Speed Steel Cutter



Designed primarily for use on aluminum core, offering the versatility of smaller sizes for use on hand-held machines in field or maintenance type repairs. This cutter offers the strength of an integral shank and blade that has an edge sharpness unattainable with any other material. This sharpness and the relieved bottom yield part surfaces that require a minimum of preparation before bonding operation.

**Usage** Aluminum Core

| Part Number | Cutting DIA | SHK DIA | OAL |
|---|---|---|---|
| 31-010 | 1/2 | 1/4 | 2-1/16 |
| 31-015 | 3/4 | 1/4 | 2-3/32 |
| 31-020 | 1 | 1/4 | 2-1/8 |
| 31-025 | 1-1/2 | 1/2 | 2-1/4 |
| 31-030 | 2 | 1/2 | 2-3/4 |
| 31-040 | 3 | 1/2 | 2-15/16 |

| Core Type | Rating |
|---|---|
| Aluminum, Lo Density (Less than 5#/cuft) | 1 |
| Aluminum, Hi Density (More than 5#/cuft) | 2 |
| Paper | 2 |
| Paper, Reinforced | N |
| Fiberglass | N |
| Phenolic | N |
| Polycarbonate | N |
| Aramid | N |

1 - Excellent, 2 - Good, N - Not Recommended

## 32-000

# High Speed Steel Hogger

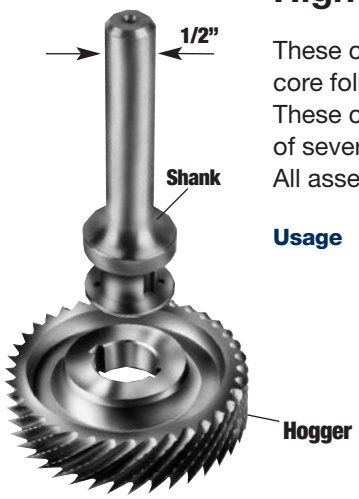


These cutters are specifically designed for fast (low force) removal of excess core followed by a final finish pass to obtain excellent finishes with one tool. These cutters enable cuts of up to .60” depths in a single pass. The availability of several different blades makes this cutter suitable for most core types. All assemblies require a shank, hogger and blade.

**Usage** Fast removal of excess core



| HONEYCOMB HOGGER | | | SHANK | | CUTTING BLADE OPTIONS | | | | | SPARE PARTS | |
|---|---|---|---|---|---|---|---|---|---|---|---|
| Part # | Cutting Diameter | Hogger Depth | Part # | Shank DIA | Blade Diameter | Solid Carbide | Diamond Plated | HSS Wavy Ring | HSS Saw | Adapter Ring | Screw |
| 32-022 | 1.732 (44mm) | .629 (16mm) | 32-021 | 1/2 | 1.771 (45mm) | 32-026 | - | 32-023 | - | - | - |
| | | | | | 1.968 (50mm) | - | 32-029* | - | 32-027* | 32-028 | - |
| 32-032 | 2.421 (61.5mm) | .629 (16mm) | 32-031 | 1/2 | 2.480 (63mm) | 32-036 | - | 32-033 | - | - | - |
| | | | | | 2.952 (75mm) | - | 32-039* | - | 32-037* | 32-038 | - |

## 30-700

# Reduced Weight Honeycomb Cutter



35% weight reduction has been designed into the larger diameter tools resulting in better performance on 3 or 5 axis machines. Part lifting and flagging have also been reduced due to the new tooth and flute design. Existing honeycomb blades will mount on these hoggers.

**Usage** CNC Machining of Honeycomb Core

| HONEYCOMB HOGGER | | | | | CUTTING BLADE OPTIONS | | | | | | | SPARE PARTS | |
|---|---|---|---|---|---|---|---|---|---|---|---|---|---|
| Part # | Cutting Diameter | Hogger Depth | Shank DIA | OAL | Blade Diameter | HSS | HSS w/Teeth | Solid Carbide | Solid Carbide w/Teeth | Diamond Plated | HSS Saw | Adapter Ring | Screw |
| 30-703 | .345 (8.76mm) | 1 | 1/2 | 3 | 3/8 (9.52mm) | 30-016 | 30-316 | - | - | - | - | - | HRD51646 |
| 30-705 | .470 (11.93mm) | 1 | 1/2 | 3 | 1/2 (12.7mm) | 30-017 | 30-317 | - | - | - | - | - | HRD51646 |
| 30-707 | .720 (18.28mm) | 1 | 1/2 | 3 | 3/4 (19.05mm) | - | - | 30-015 | 30-318 | - | - | - | 30-011-2 |
| 30-710 | .970 (24.63mm) | 1 | 1/2 | 3 | 1 (25.4mm) | - | - | 30-012 | 30-313 | 30-113 | 30-213 | - | 30-011-2 |
| 30-715 | 1.470 (37.33mm) | 1 | 1/2 | 3 | 1 1/2 (38.10mm) | - | - | 30-014 | 30-314 | 30-114 | 30-214 | 30-020-3 | 30-020-4 |
| 30-720 | 1.742 (44.24mm) | 1 | 1/2 | 3 | 1.772 (45mm) | - | - | 30-026 | 30-326 | 30-126[1] | 30-226[1] | 30-020-3 | 30-020-4 |
| 30-725 | 1.970 (50.03mm) | 1 | 5/8 | 3 | 2 (50.8mm) | - | - | 30-022 | 30-322 | 30-122 | 30-222 | 30-020-3 | 30-020-4 |
| 30-730 | 2.450 (62.23mm) | 1 | 5/8 | 3 | 2.480 (63mm) | - | - | 30-036 | 30-336 | 30-136 | 30-236 | 30-030-3 | 30-030-4 |
| 30-735 | 2.970 (75.43mm) | 1 | 3/4 | 3 | 3 (76.20mm) | - | - | 30-032 | 30-332 | 30-132 | 30-232 | 30-030-3 | 30-030-4 |
| 30-740 | 3.970 (100.83mm) | 1 | 3/4 | 3 | 4 (101.6mm) | - | - | 30-042 | 30-342 | 30-142 | 30-242 | 30-040-3 | 30-040-4 |

1 = 50mm diameter honecomb blade

# COMPOSITE CUTTING TOOLS

## P.B.S. Diamond Plated Saw Blades

**Arbor Mounted 40/60 Grit – 1/8” Return**

| Part Number Slotted | Part Number Unslotted | Outside Diameter | Plated Thick-ness (Kerf) |
|---|---|---|---|
| 49-SB1S | 49-SB1U | 1” (25 mm) | .060” to .080” |
| 49-SB1-1/2S | 49-SB1-1/2U | 1-1/2” (38 mm) | |
| 49-SB2S | 49-SB2U | 2” (51 mm) | |
| 49-SB2-1/2S | 49-SB2-1/2U | 2-1/2” (64 mm) | |
| 49-SB3S | 49-SB3U | 3” (76 mm) | |
| 49-SB3-1/2S | 49-SB3-1/2U | 3-1/2” (89 mm) | |
| 49-SB4S | 49-SB4U | 4” (102 mm) | |
| 49-SB5S | 49-SB5U | 5” (127 mm) | .090” to .110” |
| 49-SB6S | 49-SB6U | 6” (152 mm) | |
| 49-SB7S | 49-SB7U | 7” (178 mm) | |
| 49-SB8S | 49-SB8U | 8” (203 mm) | |
| 49-SB10S | 49-SB10U | 10” (25.4 cm) | |
| 49-SB12S | 49-SB12U | 12” (30.5 cm) | .120” to .130” |
| 49-SB14S | 49-SB14U | 14” (35.6 cm) | |
| 49-SB16S | 49-SB16U | 16” (40.6 cm) | |
| 49-SB18S | 49-SB18U | 18” (45.7 cm) | |
| 49-SB20S | 49-SB20U | 20” (50.8 cm) | .140” to .150” |
| 49-SB22S | 49-SB22U | 22” (55.9 cm) | |
| 49-SB24S | 49-SB24U | 24” (61.0 cm) | |
| 49-SB36S | 49-SB36U | 36” (91.4 cm) | - |
| 49-SB48S | 49-SB48U | 48” (122.0 cm) | - |



***Note**: Please specify arbor diameter

**Mounted 40/60 Grit – 1/8” Return**
One-piece construction, 2-1/2” overall shank length

| Part Number Slotted | Part Number Unslotted | Outside Diameter | Plated Thick-ness (Kerf) |
|---|---|---|---|
| 49-MS3/4S | 49-MS3/4U | 3/4" (19 mm) | .80” to .100” |
| 49-MS1S | 49-MS1U | 1” (25 mm) | |
| 49-MS1-1/4S | 49-MS1-1/4U | 1-1/4” (32 mm) | |
| 49-MS1-1/2S | 49-MS1-1/2U | 1-1/2” (38 mm) | |
| 49-MS2S | 49-MS2U | 2” (51 mm) | |
| 49-MS2-1/2S | 49-MS2-1/2U | 2-1/2” (64 mm) | |
| 49-MS3S | 49-MS3U | 3” (76 mm) | |
| 49-MS3-1/2S | 49-MS3-1/2U | 3-1/2” (89 mm) | |
| 49-MS4S | 49-MS4U | 4” (102 mm) | .102” to .130” |
| 49-MS4-1/2S | 49-MS4-1/2U | 4-1/2” (114mm) | |
| 49-MS5S | 49-MS-5U | 5” (127 mm) | .130” to .150” |
| 49-MS6S | 49-MS6U | 6” (152 mm) | |



***Note**: Please specify arbor diameter

# COMPOSITE CUTTING TOOLS

## Arbor Mount Diamond Plated Hole Saws

- **MHS series, “Black & Decker” type.**
- **Furnished with windows & slots.**
- **1-1/2” drilling depth (inside depth).**
- **For use with arbors shown below.**



| 40/60 Grit - 1/8” Return | |
|---|---|
| **Part Number** | **Head Diameter** |
| 49-MHS1/2 | 1/2” (13 mm) |
| 49-MHS9/16 | 9/16” (14 mm) |
| 49-MHS5/8 | 5/8” (16 mm) |
| 49-MHS3/4 | 3/4” (19 mm) |
| 49-MHS7/8 | 7/8” (22 mm) |
| 49-MHS1 | 1” (25 mm) |
| 49-MHS1-1/16 | 1-1/16” (27 mm) |
| 49-MHS1-1/8 | 1-1/8” (29 mm) |
| 49-MHS1-3/16 | 1-3/16” (30 mm) |
| 49-MHS1-1/4 | 1-1/4” (32 mm) |
| 49-MHS1-3/8 | 1-3/8” (35 mm) |
| 49-MHS1-1/2 | 1-1/2” (38 mm) |

| 40/60 Grit - 1/8” Return | |
|---|---|
| **Part Number** | **Head Diameter** |
| 49-MHS1-3/4 | 1-3/4” (44 mm) |
| 49-MHS1-7/8 | 1-7/8” (48 mm) |
| 49-MHS2 | 2” (51 mm) |
| 49-MHS2-1/4 | 2-1/4” (57 mm) |
| 49-MHS2-1/2 | 2-1/2” (64 mm) |
| 49-MHS3 | 3” (76 mm) |
| 49-MHS3-1/4 | 3-1/4” (83 mm) |
| 49-MHS3-1/2 | 3-1/2” (89 mm) |
| 49-MHS4 | 4” (102 mm) |
| 49-MHS4-1/4 | 4-1/4” (108 mm) |
| 49-MHS4-1/2 | 4-1/2” (114 mm) |
| 49-MHS5 | 5” (127 mm) |

## MHS Series Hole Saw Arbors

- **For MHS series hole saws above**
- **Quick release for change of hole saws without removing arbor from chuck**
- **Setscrew body for pilot drill adjustment**
- **Also available with pilots**



| Part Number | Fits Hole Saw Dia. | Screw Thread | Shank Size | Chuck Size |
|---|---|---|---|---|
| 19-NA-01 | 9/16” to 1-3/16” | 1/2”-20 | 1/4” | 3/8” |
| 49-NA-06 | 1-1/4” to 6” | 5/8”-18 | 7/16” | 1/2” |

## Flexible Diamond Hand Sanding Pads



| Part Number | Grit | Type | Size |
|---|---|---|---|
| 92350 | 70 | Plated / Flexible (for grinding) | 2-1/2" x 4-1/4" (64 x 108 mm) |
| 92351 | 120 | | |
| 92352 | 220 | | |
| 92353 | 400 | | |
| 92354 | 600 | | |
| 92450 | 220 | Resin / Flexible (for finishing) | |
| 92451 | 600 | | |
| 92452 | 1,800 | | |
| 92453 | 3,500 | | |

- **These diamond hand sanding pads work best when used wet.**
- **Excellent for composite work**

## Diamond Plated Routers



***Note:** Please specify shank diameter. On 3/4” & larger outside diameter routers, minimum shank diameters is 1/2". Larger sizes are available on request.

| 40/60 Grit | | | | | |
|---|---|---|---|---|---|
| **Part No. Unfluted, Square End *** | **Part No. Unfluted, Radius End *** | **Part No. Fluted, Square End *** | **Part No. Fluted, Radius End *** | **Outside Dia.** | **Head Length** |
| 49-R1US | 49-R1UR | - | - | 1/8” (3.2 mm) | 1/4” (6.35 mm) |
| 49-R2US | 49-R2UR | - | - | | 1/2” (13 mm) |
| 49-R3US | 49-R3UR | 49-R3FS | 49-R3FR | 1/4” (6.35 mm) | 1/4" (6.35 mm) |
| 49-R4US | 49-R4UR | 49-R4FS | 49-R4FR | | 1/2" (13 mm) |
| 49-R5US | 49-R5UR | 49-R5FS | 49-R5FR | | 3/4" (19 mm) |
| 49-R6US | 49-R6UR | 49-R6FS | 49-R6FR | | 1” (25 mm) |
| 49-R7US | 49-R7UR | 49-R7FS | 49-R7FR | | 1-1/2” (38 mm) |
| 49-R8US | 49-R8UR | 49-R8FS | 49-R8FR | 3/8” (10 mm) | 3/8” (10mm) |
| 49-R9US | 49-R9UR | 49-R9FS | 49-R9FR | | 1/2" (13 mm) |
| 49-R10US | 49-R10UR | 49-R10FS | 49-R10FR | | 3/4” (19mm) |
| 49-R11US | 49-R11UR | 49-R11FS | 49-R11FR | | 1” (25 mm) |
| 49-R12US | 49-R12UR | 49-R12FS | 49-R12FR | | 1-1/2” (38 mm) |
| 49-R13US | 49-R13UR | 49-R13FS | 49-R13FR | 1/2” (13 mm) | 1/2” (13 mm) |
| 49-R14US | 49-R14UR | 49-R14FS | 49-R14FR | | 3/4" (19 mm) |
| 49-R15US | 49-R15UR | 49-R15FS | 49-R15FR | | 1” (25 mm) |
| 49-R16US | 49-R16UR | 49-R16FS | 49-R16FR | | 1-1/2” (38 mm) |
| 49-R17US | 49-R17UR | 49-R17FS | 49-R17FR | | 2” (51 mm) |
| 49-R18US | 49-R18UR | 49-R18FS | 49-R18FR | 5/8” (16 mm) | 1/2” (13 mm) |
| 49-R19US | 49-R19UR | 49-R19FS | 49-R19FR | | 3/4" (19 mm) |
| 49-R20US | 49-R20UR | 49-R20FS | 49-R20FR | | 1” (25 mm) |
| 49-R21US | 49-R21UR | 49-R21FS | 49-R21FR | | 1-1/2” (38 mm) |
| 49-R22US | 49-R22UR | 49-R22FS | 49-R22FR | | 2” (51 mm) |
| 49-R23US | 49-R23UR | 49-R23FS | 49-R23FR | 3/4" (19 mm) | 1/2” (13 mm) |
| 49-R24US | 49-R24UR | 49-R24FS | 49-R24FR | | 3/4" (19 mm) |
| 49-R25US | 49-R25UR | 49-R25FS | 49-R25FR | | 1” (25 mm) |
| 49-R26US | 49-R26UR | 49-R26FS | 49-R26FR | | 1-1/2” (38 mm) |
| 49-R27US | 49-R27UR | 49-R27FS | 49-R27FR | | 2” (51 mm) |
| 49-R28US | 49-R28UR | 49-R28FS | 49-R28FR | 1” (25 mm) | 1/2” (13 mm) |
| 49-R29US | 49-R29UR | 49-R29FS | 49-R29FR | | 3/4" (19 mm) |
| 49-R30US | 49-R30UR | 49-R30FS | 49-R30FR | | 1” (25 mm) |
| 49-R31US | 49-R31UR | 49-R31FS | 49-R31FR | | 1-1/2” (38 mm) |
| 49-R32US | 49-R32UR | 49-R32FS | 49-R32FR | | 2” (51 mm) |
| 49-R33US | 49-R33UR | 49-R33FS | 49-R33FR | 2” (51 mm) | 1” (25 mm) |
| 49-R34US | 49-R34UR | 49-R34FS | 49-R34FR | | 2” (51 mm) |

## P.B.S. Diamond Plated Jigsaw Blades



| Part No. | Fits Jug Saws | Overall Length |
|---|---|---|
| 49-300 | Black & Decker & Competitive | 3” (76 mm) |
| 49-301 | Rockwell Bayonet | 3” (76 mm) |
| 49-303 | Rockwell Tiger & Competitive | 4” (102 mm) |

| Part No. | Fits Jug Saws | Overall Length |
|---|---|---|
| 49-304 | Black & Decker & Competitive | 4” (102 mm) |
| 49-302 | Bosch Style | 3” (76 mm) |
| 49-305 | Bosch Style | 4” (102 mm) |

# COMPOSITE CUTTING TOOLS

## P.B.S. Diamond Plated Twist Drills



- All drills are general purpose, standard length

| 40/60 Grit – 3/16” Return | |
|---|---|
| **Part Number** | **Head Diameter** |
| 49-TD1 | 1/8” (3.2 mm) |
| 49-TD2 | 1/4" (6.35 mm) |
| 49-TD3 | 3/8” (10 mm) |
| 49-TD4 | 7/16” (11 mm) |
| 49-TD5 | 1/2" (13 mm) |

| 40/60 Grit – 3/16” Return | |
|---|---|
| **Part Number** | **Head Diameter** |
| 49-TD6 | 5/8” (16 mm) |
| 49-TD7 | 3/4" (19 mm) |
| 49-TD8 | 7/8” (22 mm) |
| 49-TD9 | 1” (25 mm) |
| - | - |

## Diamond Plated Integral Pilot Countersinks



**Note:** Select a base part number for the required cutter (charts below), add a pilot diameter, grit and number of slots (0, 2 or3)

**Available Grits: A** 30/40 – **B** 40/60 – **C** 60/80
**D** 120/140 – **E** 220/270

**Example:** For a 100°, 1/2" diameter cutter with a 5/32” pilot, 40/60 grit and two slots the part number would be **02-50C-5/32-B-2**.

| 1/4”-28 Thread – 100° Cutter Angle | | |
|---|---|---|
| **Part Number** | **Outside Diameter** | **Overall Length** |
| 02-38C | 3/8” (10 mm) | 1” (25 mm) |
| 02-50C | 1/2" (13 mm) | 1” (25 mm) |
| 02-62C | 5/8” (16 mm) | 1” (25 mm) |

| 1/4”-28 Thread – 130° Cutter Angle | | |
|---|---|---|
| **Part Number** | **Outside Diameter** | **Overall Length** |
| 02-38D | 3/8” (10 mm) | 1” (25 mm) |
| 02-50D | 1/2" (13 mm) | 1” (25 mm) |
| 02-62D | 5/8” (16 mm) | 1” (25 mm) |

# CARBIDE COMPOSITE TOOLING
# HIGH QUALITY TOOLS

**For use on Graphite, Kevlar, Fiberglass and many other composite materials**

## DRILL REAMER - is used primarily on Fiberglass/Graphite materials.

**This 4 flute cutting tool drills & reams while holding extremely close tolerances**

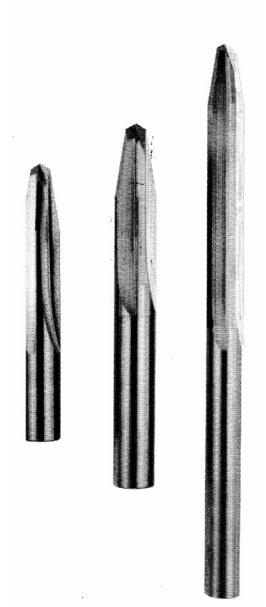

| Drill Size | Part-No. | Part-No. | Part-No. |
|---|---|---|---|
| | Overall Length 3" | Overall Length 4" | Overall Length 6" |
| .0980 | DR-0980-3" | DR-0980-4" | DR-0980-6" |
| .1250 | DR-1250-3" | DR-1250-4" | DR-1250-6" |
| .1285 | DR-1285-3" | DR-1285-4" | DR-1285-6" |
| .1406 | DR-1406-3" | DR-1406-4" | DR-1406-6" |
| .1562 | DR-1562-3" | DR-1562-4" | DR-1562-6" |
| .1590 | DR-1590-3" | DR-1590-4" | DR-1590-6" |
| .1610 | DR-1610-3" | DR-1610-4" | DR-1610-6" |
| .1719 | DR-1719-3" | DR-1719-4" | DR-1719-6" |
| .1875 | DR-1875-3" | DR-1875-4" | DR-1875-6" |
| .1910 | DR-1910-3" | DR-1910-4" | DR-1910-6" |
| .1935 | DR-1935-3" | DR-1935-4" | DR-1935-6" |
| .1990 | DR-1990-3" | DR-1990-4" | DR-1990-6" |
| .2010 | DR-2010-3" | DR-2010-4" | DR-2010-6" |
| .2031 | DR-2031-3" | DR-2031-4" | DR-2031-6" |
| .2188 | DR-2188-3" | DR-2188-4" | DR-2188-6" |
| .2280 | DR-2280-3" | DR-2280-4" | DR-2280-6" |
| .2340 | DR-2340-3" | DR-2340-4" | DR-2340-6" |
| .2380 | DR-2380-3" | DR-2380-4" | DR-2380-6" |
| .2500 | DR-2500-3" | DR-2500-4" | DR-2500-6" |
| .2510 | DR-2510-3" | DR-2510-4" | DR-2510-6" |

## DAGGER DRILL - an excellent tool for drilling Graphite/Epoxy Laminates.

**Can even be used in combination with aluminium. No back up required. Feeds and speeds recommendations available.**

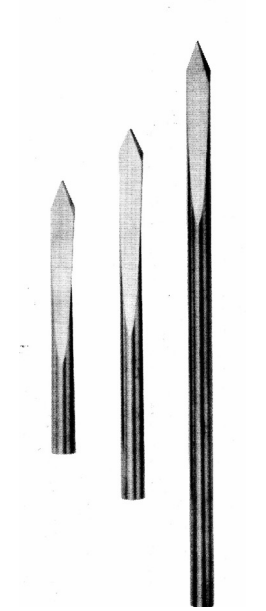

| Drill Size | Part-No. | Part-No. | Part-No. |
|---|---|---|---|
| | Overall Length 3" | Overall Length 4" | Overall Length 6" |
| .1250 | DD-1250-3" | DD-1250-4" | DD-1250-6" |
| .1285 | DD-1285-3" | DD-1285-4" | DD-1285-6" |
| .1406 | DD-1406-3" | DD-1406-4" | DD-1406-6" |
| .1562 | DD-1562-3" | DD-1562-4" | DD-1562-6" |
| .1590 | DD-1590-3" | DD-1590-4" | DD-1590-6" |
| .1610 | DD-1610-3" | DD-1610-4" | DD-1610-6" |
| .1719 | DD-1719-3" | DD-1719-4" | DD-1719-6" |
| .1875 | DD-1875-3" | DD-1875-4" | DD-1875-6" |
| .1910 | DD-1910-3" | DD-1910-4" | DD-1910-6" |
| .1935 | DD-1935-3" | DD-1935-4" | DD-1935-6" |
| .1990 | DD-1990-3" | DD-1990-4" | DD-1990-6" |
| .2010 | DD-2010-3" | DD-2010-4" | DD-2010-6" |
| .2031 | DD-2031-3" | DD-2031-4" | DD-2031-6" |
| .2188 | DD-2188-3" | DD-2188-4" | DD-2188-6" |
| .2280 | DD-2280-3" | DD-2280-4" | DD-2280-6" |
| .2340 | DD-2340-3" | DD-2340-4" | DD-2340-6" |
| .2380 | DD-2380-3" | DD-2380-4" | DD-2380-6" |
| .2500 | DD-2500-3" | DD-2500-4" | DD-2500-6" |
| .2510 | DD-2510-3" | DD-2510-4" | DD-2510-6" |

**Metrische Abmessungen auf Anfrage verfügbar** / METRIC DIMENSIONS AVAILABLE ON REQUEST

# Solid Carbide Drill Reamer – The Graphinator™



- Patent pending design virtually eliminates fiber break-out and delamination in nearly all of today's advanced composite materials.
- For special material stack-ups, also for aluminum honeycomb and phenolic materials.
- There are many configurations of this tool allowing it to be tailored to specific material properties and manufacturing processes.
- Much longer life compared to other composite drill reamers.

# Solid Carbide Jobber Length Drills



- Precision Ground Carbide Drills Are Designed for High Feed Rates With Good Chip Disposal
- Recommended For Use On Cast Iron, Aluminum, Plastic, Composites, Nonferrous Alloys And Other Easily Machined Materials.
- 118° Four Facet Point Angle
- Four Facet Drill Point Minimizes Drill Wander And Assures Accurately Sized Holes

| DIAMTER NUMBER | PART NUMBER | DECIMAL EQUIVALENT INCHES | MILLIMETER EQUIVALENT | FLUTE LENGTH INCHES | OVERALL LENGTH INCHES |
|---|---|---|---|---|---|
| #5 | 09-005 | .2055 | 5.22 mm | 1-3/4 | 3 |
| #8 | 09-008 | .1990 | 5.05 mm | 1-3/4 | 3 |
| #10 | 09-010 | .1935 | 4.91 mm | 1-5/8 | 2-3/4 |
| #12 | 09-012 | .1890 | 4.80 mm | 1-5/8 | 2-3/4 |
| #13 | 09-013 | .1850 | 4.70 mm | 1-5/8 | 2-3/4 |
| #16 | 09-016 | .1770 | 4.50 mm | 1-5/8 | 2-3/4 |
| #20 | 09-020 | .1610 | 4.09 mm | 1-3/8 | 2-1/2 |
| #21 | 09-021 | .1590 | 4.04 mm | 1-3/8 | 2-1/2 |
| #27 | 09-027 | .1440 | 3.66 mm | 1-3/8 | 2-1/2 |
| #30 | 09-030 | .1285 | 3.26 mm | 1-1/4 | 2-1/4 |
| #40 | 09-040 | .0980 | 2.49 mm | 1 | 2 |
| 1/16 | 09-061 | .0625 | 1.59 mm | 3/4 | 1-1/2 |
| 5/64 | 09-062 | .0781 | 1.98 mm | 7/8 | 1-3/4 |
| 3/32 | 09-063 | .0938 | 2.38 mm | 1 | 2 |
| 7/64 | 09-064 | .1094 | 2.78 mm | 1-1/4 | 2-1/4 |
| 1/8 | 09-065 | .1250 | 3.18 mm | 1-1/4 | 2-1/4 |
| 9/64 | 09-066 | .1406 | 3.57 mm | 1-3/8 | 2-1/2 |
| 5/32 | 09-067 | .1562 | 3.97 mm | 1-3/8 | 2-1/2 |
| 11/64 | 09-068 | .1719 | 4.37 mm | 1-5/8 | 2-3/4 |
| 3/16 | 09-069 | .1875 | 4.76 mm | 1-5/8 | 2-3/4 |
| 13/64 | 09-070 | .2031 | 5.16 mm | 1-3/4 | 3 |
| 7/32 | 09-071 | .2188 | 5.56 mm | 1-3/4 | 3 |
| 15/64 | 09-072 | .2344 | 5.95 mm | 2 | 3-1/4 |
| 1/4 | 09-073 | .2500 | 6.35 mm | 2 | 3-1/4 |
| 17/64 | 09-074 | .2656 | 6.75 mm | 2-1/8 | 3-1/2 |
| 9/32 | 09-075 | .2812 | 7.14 mm | 2-1/8 | 3-1/2 |
| 19/64 | 09-076 | .2969 | 7.54 mm | 2-3/8 | 3-3/4 |
| 5/16 | 09-077 | .3125 | 7.94 mm | 2-3/8 | 3-3/4 |

# PCD Spiral Drills

PCD Wafer Tipped Spiral Drill, with improved flexible geometry can drill a wide range of CFRP/Stack materials.
These drills are drilling more than 650 holes in 10mm material thickness.

| INCHES | | | | |
|---|---|---|---|---|
| **Part Number** | **Diameter – Ø D** | **Shank Ø d** | **Cutting Length** | **Overall Length** |
| **TSD -_ _ _ _** | from 0.1250 to 0.1875 | 0.1875 (3/16”) | 1.02 | 2.44 |
| **TSD -_ _ _ _** | from 0.1880 to 0.2500 | 0.250 (1/4”) | 1.22 | 2.76 |
| **TSD -_ _ _ _** | from 0.2540 to 0.3125 | 0.3125 (5/16”) | 1.46 | 3.11 |
| **TSD -_ _ _ _** | from 0.3130 to 0.3750 | 0.3750 (3/8”) | 1.69 | 3.50 |
| **TSD -_ _ _ _** | from 0.3800 to 0.4375 | 0.4375 (7/16”) | 1.85 | 3.74 |
| **TSD -_ _ _ _** | from 0.4380 to 0.5000 | 0.5000 (1/2”) | 2.01 | 4.02 |

P/N Sample with a Ø D of 0.1250: TSD-1250

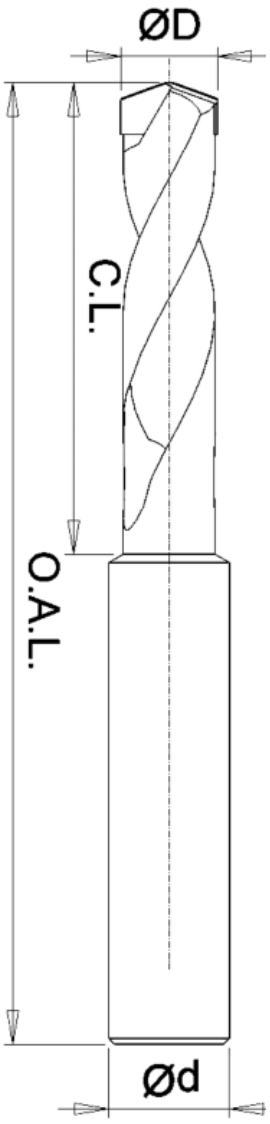


| MILLIMETERS | | | | |
|---|---|---|---|---|
| **Part Number** | **Diameter – Ø D** | **Shank Ø d** | **Cutting Length** | **Overall Length** |
| **TSD -_ _ _ _** | 3.00 | 3.0 mm | 16 mm | 46 mm |
| **TSD -_ _ _ _** | from 3.01 to 4.00 | 4.0 mm | 22 mm | 55 mm |
| **TSD -_ _ _ _** | from 4.01 to 5.00 | 5.0 mm | 26 mm | 62 mm |
| **TSD -_ _ _ _** | from 5.01 to 6.00 | 6.0 mm | 28 mm | 66 mm |
| **TSD -_ _ _ _** | from 6.01 to 7.00 | 7.0 mm | 34 mm | 74 mm |
| **TSD -_ _ _ _** | from 7.01 to 8.00 | 8.0 mm | 37 mm | 79 mm |
| **TSD -_ _ _ _** | from 8.01 to 9.00 | 9.0 mm | 40 mm | 84 mm |
| **TSD -_ _ _ _** | from 9.01 to 10.00 | 10.0 mm | 43 mm | 89 mm |
| **TSD -_ _ _ _** | from 10.01 to 11.00 | 11.0 mm | 47 mm | 95 mm |
| **TSD -_ _ _ _** | from 11.01 to 12.00 | 12.0 mm | 51 mm | 102 mm |
| **TSD -_ _ _ _** | from 12.01 to 13.00 | 13.0 mm | 51 mm | 102 mm |
| **TSD -_ _ _ _** | from 13.01 to 14.00 | 14.0 mm | 54 mm | 107 mm |
| **TSD -_ _ _ _** | from 14.01 to 15.00 | 15.0 mm | 56 mm | 111 mm |
| **TSD -_ _ _ _** | from 15.01 to 16.00 | 16.0 mm | 58 mm | 115 mm |

P/N Sample with a Ø D of 3.00 mm: TSD-0300



**Andere Abmessungen auf Anfrage /** OTHER DIMENSIONS ON REQUEST

# PCD Helicon Full Nib Spiral Drills

8 or 4 facet drills, destined to be the leader in hole drilling in the aerospace industry, especially manufactured for the high demands needed by modern CFRP and CFRP/Stacks/AL/TI. These drills are drilling more than 2,200 holes.

| INCHES | | | | |
|---|---|---|---|---|
| **Part Number** | **Diameter – Ø D** | **Shank Ø d h6** | **Cutting Length** | **Overall Length** |
| **FND-_ _ _ _** | from 0.0980 to 0.1250 | 0.125 (1/8”) | 1.02 | 2.44 |
| **FND-_ _ _ _** | from 0.1250 to 0.1875 | 0.1875 (3/16”) | 1.02 | 2.44 |
| **FND-_ _ _ _** | from 0.1880 to 0.2500 | 0.250 (1/4”) | 1.22 | 2.76 |
| **FND-_ _ _ _** | from 0.2540 to 0.3125 | 0.3125 (5/16”) | 1.46 | 3.11 |
| **FND-_ _ _ _** | from 0.3130 to 0.3540 | 0.3750 (3/8”) | 1.69 | 3.50 |

P/N Sample with a Ø D of 0.0980: FND-0980

| MILLIMETERS | | | | |
|---|---|---|---|---|
| **Part Number** | **Diameter – Ø D** | **Shank Ø d h6** | **Cutting Length** | **Overall Length** |
| **FND-_ _ _ _** | from 2.50 to 3.00 | 3.0 mm | 16 mm | 60 mm |
| **FND-_ _ _ _** | from 3.01 to 4.00 | 4.0 mm | 22 mm | 75 mm |
| **FND-_ _ _ _** | from 4.01 to 5.00 | 5.0 mm | 26 mm | 75 mm |
| **FND-_ _ _ _** | from 5.01 to 6.00 | 6.0 mm | 28 mm | 80 mm |
| **FND-_ _ _ _** | from 6.01 to 7.00 | 8.0 mm | 37 mm | 85 mm |
| **FND-_ _ _ _** | from 7.00 to 8.00 | 8.0 mm | 37 mm | 85 mm |
| **FND-_ _ _ _** | from 8.01 to 9.00 | 10.0 mm | 43 mm | 90 mm |
| **FND-_ _ _ _** | from 9.01 to 10.00 | 10.0 mm | 43 mm | 90 mm |

P/N Sample with a Ø D of 2.50 mm: FND-250

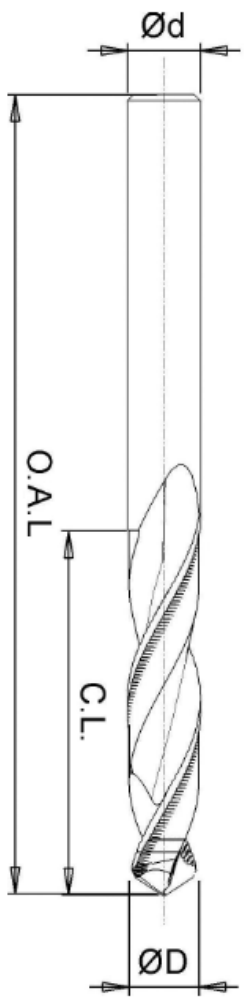


| Feedrate (mm/th) | Speed (m/min) | Material Group |
|---|---|---|
| 0.02-0.45 | 150-200 | CFRP |
| 0.02-0.45 | 150-200 | CFRP/Al |
| 0.02-0.75 | 10-15 | CFRP/Ti |

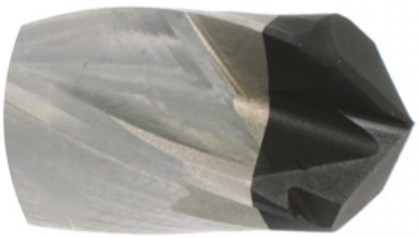

**Advantages of PCD**
- Longer Tool Life
- Increased Productivity through performance
- Reduced machine down time
- Tighter Tolerances through extended tool life cycle
- Super fine component finishes
- Cost effective solutions

**PCD Applications**
- Carbon Fiber Reinforced Plastics. (Composite Material) (CFRP)
- Metal Matrix Composites (MMC)
- Aluminum and Aluminum alloys
- Aluminum/CFRP stack
- Titanium/ CFRP stack
- Plastics



**Andere Abmessungen auf Anfrage /** OTHER DIMENSIONS ON REQUEST

# Hartmetall Frässtifte / **CARBIDE BURRS**

**4 STANDART CUTS ARE AVAILABLE FOR THE FOLLOWING CARBIDE BURR SHAPES**

Industry's widest selection of Burr Shapes and Sizes becomes even more versatile, with a choice of four (4) flute styles for perfect mating of the tool to the job and material and you may choose any of these styles as "standard". Super finished cutting edges give our burs the quality and remarkable long life you've been looking for:

**SPECIFICATIONS:**
End cuts have basic and intermediate flutes – no zero cutting. Where shank material is listed as "Carbide", the tool is solid carbide, one-piece construction and should be used for heavy duty work whenever possible. Thank tolerances: + .0000 - .0005

**A** STANDARD CUT | **B** MEDIUM STARCUT | **C** COARSE STARCUT | **D** FINE STARCUT



**BURR SELECTION RECOMMENDATIONS:**

| | | |
|---|---|---|
| **STANDARD CUT** | **(A):** | Use for general purpose deburring of steel, cast iron and other ferrous metals… |
| **MEDIUM STARCUT** | **(B):** | Cross-fluted pattern produces a granular chip which induces improved control for portable hand operations… |
| **COARSE STARCUT** | **(C):** | Recommended for dressing welds, snagging castings and machining non-ferrous metals, wood and plastics…. |
| **FINE STARCUT** | **(D):** | Recommended for applications where fine grinding and finish is a prerequisite… |
| **ALUMINIUM STARCUT** | **(SA):** | The milling cutter relief flute style provides fast and free ship removal soft |
| **SHANK SIZES:** | | Are designated for each burr… also available with 3M/M, 6M/M and 8M/M Shanks… |

**"A" SHAPE (CYLINDRICAL)**



| PART NO. | HEAD DIA. | HEAD LENGTH | SHANK DIA. | SHANK MAT | END CUT |
|---|---|---|---|---|---|
| **A4** | 1/16 | 3/8 | 1/8 | CARBIDE | NO |
| **A10** | 3/32 | 9/16 | 1/8 | CARBIDE | YES |
| **A12** | 1/8 | 5/8 | 1/8 | CARBIDE | YES |
| **A14** | 3/16 | 5/8 | 3/16 | CARBIDE | NO |
| **A16** | 1/4 | 1/2 | 1/8 | STEEL | NO |
| **A18** | 1/4 | 3/16 | 1/8 | STEEL | YES |
| **A20** | 1/4 | 5/8 | 1/4 | CARBIDE | NO |
| **A22** | 3/8 | 3/4 | 1/4 | STEEL | NO |
| **A24** | 1/2 | 1 | 1/4 | STEEL | NO |
| **A26** | 5/8 | 1 | 1/4 | STEEL | NO |
| **A28** | 3/4 | 1 | 1/4 | STEEL | NO |

**"B" SHAPE (CYLINDRICAL – RADIUS END)**



| PART NO. | HEAD DIA. | HEAD LENGTH | SHANK DIA. | SHANK MAT | END RAD |
|---|---|---|---|---|---|
| **B2** | 1/16 | 3/8 | 1/8 | CARBIDE | 1/32 |
| **B4** | 3/32 | 3/8 | 1/8 | CARBIDE | 3/64 |
| **B6** | 1/8 | 5/8 | 1/8 | CARBIDE | 1/16 |
| **B8** | 3/16 | 1/2 | 1/8 | CARBIDE | 1/16 |
| **B10** | 1/4 | 5/8 | 3/16 | CARBIDE | 3/32 |
| **B12** | 1/4 | 1/2 | 1/8 | STEEL | 1/8 |
| **B14** | 1/4 | 5/8 | 1/4 | CARBIDE | 1/8 |
| **B16** | 3/8 | 3/4 | 1/4 | STEEL | 3/16 |
| **B18** | 1/2 | 1 | 1/4 | STEEL | 1/4 |
| **B20** | 5/8 | 1 | 1/4 | STEEL | 5/16 |
| **B22** | 3/4 | 1 | 1/4 | STEEL | 3/8 |

**"C" SHAPE (POINTED TREE)**



| PART NO. | HEAD DIA. | HEAD LENGTH | SHANK DIA. | SHANK MAT | END CUT |
|---|---|---|---|---|---|
| **C2** | 1/8 | 1/4 | 1/8 | CARBIDE | NO |
| **C4** | 1/8 | 3/8 | 1/8 | CARBIDE | NO |
| **C6** | 3/16 | 1/2 | 3/16 | CARBIDE | NO |
| **C8** | 1/4 | 1/2 | 1/8 | STEEL | NO |
| **C10** | 1/4 | 5/8 | 1/4 | CARBIDE | NO |
| **C12** | 3/8 | 3/4 | 1/4 | STEEL | NO |
| **C14** | 1/2 | 1 | 1/4 | STEEL | NO |
| **C16** | 5/8 | 1 | 1/4 | STEEL | NO |
| **C18** | 3/4 | 1 | 1/4 | STEEL | NO |

# Hartmetall Frässtifte / **CARBIDE BURRS**



| "D" SHAPE (TAPER CONE) | | | | | |
|---|---|---|---|---|---|
| PART NO. | HEAD DIA. | HEAD LENGTH | SHANK DIA. | SHANK MAT | INC. ANGLE |
| **D2** | 1/8 | 1/2 | 1/8 | CARBIDE | 12 |
| **D4** | 1/8 | 3/8 | 1/8 | CARBIDE | 12 |
| **D6** | 3/16 | 1/2 | 3/16 | CARBIDE | 12 |
| **D8** | 1/4 | 1/2 | 1/8 | STEEL | 22 |
| **D10** | 1/4 | 1/2 | 1/4 | CARBIDE | 22 |
| **D12** | 1/4 | 3/4 | 1/4 | CARBIDE | 14 |
| **D14** | 3/8 | 5/8 | 1/4 | STEEL | 28 |
| **D16** | 3/8 | 1 | 1/4 | STEEL | 14 |
| **D18** | 1/2 | 1 | 1/4 | STEEL | 28 |



| "E" SHAPE (INVERTED CONE) | | | | | |
|---|---|---|---|---|---|
| PART NO. | HEAD DIA. | HEAD LENGTH | SHANK DIA. | SHANK MAT | END CUT |
| **E2** | 1/16 | 1/16 | 1/8 | CARBIDE | YES |
| **E6** | 3/32 | 3/32 | 1/8 | CARBIDE | YES |
| **E8** | 1/8 | 3/16 | 1/8 | CARBIDE | YES |
| **E10** | 3/16 | 1/4 | 3/16 | CARBIDE | NO |
| **E12** | 1/4 | 1/4 | 1/8 | STEEL | YES |
| **E14** | 1/4 | 5/16 | 1/4 | CARBIDE | NO |
| **E16** | 3/8 | 3/8 | 1/4 | STEEL | NO |
| **E18** | 1/2 | 1/2 | 1/4 | STEEL | NO |



| "F" SHAPE (TAPER CONE – RADIUS END) | | | | | |
|---|---|---|---|---|---|
| PART NO. | HEAD DIA. | HEAD LENGTH | SHANK DIA. | SHANK MAT | INC. ANGLE |
| **F1** | 1/8 | 3/8 | 1/8 | CARBIDE | 14 |
| **F2** | 3/16 | 1/2 | 3/16 | CARBIDE | 14 |
| **F4** | 1/4 | 1/2 | 1/4 | CARBIDE | 14 |
| **F6** | 1/4 | 3/4 | 1/4 | CARBIDE | 14 |
| **F8** | 3/8 | 5/8 | 1/4 | STEEL | 14 |
| **F10** | 3/8 | 1-1/16 | 1/4 | STEEL | 14 |
| **F12** | 1/2 | 1-1/8 | 1/4 | STEEL | 14 |
| **F14** | 5/8 | 1-7/16 | 1/4 | STEEL | 14 |
| **F16** | 3/4 | 1-9/16 | 1/4 | STEEL | 14 |



| "G" SHAPE (DEBURRING CUTTER 60°) | | | | | |
|---|---|---|---|---|---|
| PART NO. | HEAD DIA. | HEAD LENGTH | SHANK DIA. | SHANK MAT | - |
| **G2** | 1/8 | 3/16 | 1/8 | CARBIDE | - |
| **G4** | 3/16 | 1/4 | 3/16 | CARBIDE | - |
| **G6** | 1/4 | 5/16 | 1/4 | CARBIDE | - |
| **G8** | 3/8 | 3/8 | 1/4 | STEEL | - |
| **G10** | 1/2 | 1/2 | 1/4 | STEEL | - |
| **G12** | 5/8 | 5/8 | 1/4 | STEEL | - |
| **G14** | 3/4 | 5/8 | 1/4 | STEEL | - |



| "K" SHAPE (DEBURRING CUTTER 90°) | | | | | |
|---|---|---|---|---|---|
| PART NO. | HEAD DIA. | HEAD LENGTH | SHANK DIA. | SHANK MAT | - |
| **K2** | 1/8 | 3/16 | 1/8 | CARBIDE | - |
| **K4** | 3/16 | 1/4 | 3/16 | CARBIDE | - |
| **K6** | 1/4 | 5/16 | 1/4 | CARBIDE | - |
| **K8** | 3/8 | 3/8 | 1/4 | STEEL | - |
| **K10** | 1/2 | 1/2 | 1/4 | STEEL | - |
| **K12** | 5/8 | 5/8 | 1/4 | STEEL | - |
| **K14** | 3/4 | 3/4 | 1/4 | STEEL | - |



| "H" SHAPE (TREE – RADIUS END) | | | | | |
|---|---|---|---|---|---|
| PART NO. | HEAD DIA. | HEAD LENGTH | SHANK DIA. | SHANK MAT | END RAD |
| **H2** | 1/8 | 13/32 | 1/8 | CARBIDE | 3/64 |
| **H4** | 1/8 | 3/8 | 1/8 | CARBIDE | 1/64 |
| **H6** | 3/16 | 1/2 | 3/16 | CARBIDE | 1/64 |
| **H8** | 1/4 | 1/2 | 1/8 | STEEL | 1/16 |
| **H10** | 1/4 | 5/8 | 1/4 | CARBIDE | 1/16 |
| **H12** | 3/8 | 3/4 | 1/4 | STEEL | 3/32 |
| **H14** | 1/2 | 1 | 1/4 | STEEL | 1/8 |
| **H16** | 5/8 | 1 | 1/4 | STEEL | 3/16 |

# Hartmetall Frässtifte / **CARBIDE BURRS**

## "I" SHAPE (BALL)



| PART NO. | HEAD DIA. | HEAD LENGTH | SHANK DIA. | SHANK MAT | END RAD |
|---|---|---|---|---|---|
| **I2** | 1/16 | .039 | 1/8 | CARBIDE | .031 |
| **I6** | 3/32 | .072 | 1/8 | CARBIDE | .047 |
| **I8** | 1/8 | 1/8 | 1/8 | CARBIDE | 1/16 |
| **I10** | 3/16 | 3/16 | 3/16 | CARBIDE | 3/32 |
| **I12** | 1/4 | 1/4 | 1/8 | STEEL | 1/8 |
| **I14** | 1/4 | 1/4 | 1/4 | CARBIDE | 1/8 |
| **I16** | 3/8 | 3/8 | 1/4 | STEEL | 3/16 |
| **I18** | 1/2 | 1/2 | 1/4 | STEEL | 1/4 |
| **I20** | 5/8 | 5/8 | 1/4 | STEEL | 5/16 |
| **I22** | 3/4 | 3/4 | 1/4 | STEEL | 3/8 |

## "J" SHAPE (OLIVE)



| PART NO. | HEAD DIA. | HEAD LENGTH | SHANK DIA. | SHANK MAT | END RAD |
|---|---|---|---|---|---|
| **J2** | 1/8 | 3/16 | 1/8 | CARBIDE | 3/64 |
| **J4** | 1/8 | 3/16 | 1/8 | CARBIDE | 1/64 |
| **J6** | 3/16 | 1/4 | 3/16 | CARBIDE | 1/16 |
| **J8** | 1/4 | 3/8 | 1/8 | STEEL | 5/64 |
| **J10** | 1/4 | 3/8 | 1/4 | CARBIDE | 5/64 |
| **J12** | 3/8 | 5/8 | 1/4 | STEEL | 1/8 |
| **J14** | 1/2 | 3/4 | 1/4 | STEEL | 5/32 |
| **J16** | 5/8 | 1 | 1/4 | STEEL | 1/4 |
| **J18** | 3/4 | 1 | 1/4 | STEEL | 5/16 |

## ALUMINIUM STAR CUT

Is designed for Aluminum and non-ferrous material.
Can be used in Air-Tool or Milling Machine.
Excellent for heavy and medium stock removal of soft sticky material.

| HEAD DIA. | HEAD LENGTH | | PART NO. | | PART NO. | | PART NO. | | PART NO. |
|---|---|---|---|---|---|---|---|---|---|
| 3/8 | 3/4 |  | **A22SA** |  | **H12SA** |  | **B16SA** |  | **F10SA** |
| 1/2 | 1 | | **A24SA** | | **H14SA** | | **B18SA** | | **F12SA** |
| 5/8 | 1 | | **A26SA** | | **H16SA** | | **B20SA** | | **F14SA** |
| 3/4 | 1-1/4 | | **A28SA** | | **H18SA** | | **B22SA** | | **F16SA** |



| PART NO. | HEAD DIA. |
|---|---|
| **I-16SA** | 3/8 |
| **I-18SA** | 1/2 |
| **I-20SA** | 5/8 |
| **I-22SA** | 3/4 |

## MINI CARBIDE BURRS WITH 3/32" CARBIDE SHANKS

| PART NO. | I-1 | I-3 | I-5 | E-1 | E-3 | E-5 | A-1 | A-3 | A-5 | L-1 | L-3 | L-5 |
|---|---|---|---|---|---|---|---|---|---|---|---|---|
| HEAD DIA. | .039 | .055 | .072 | .039 | .055 | .072 | .039 | .055 | .072 | .039 | .055 | .072 |
| |  | | | | | | | | | | | |

# Pneumatische Winkelschleifer

## PNEUMATIC RIGHT ANGLE DIE GRINDER










**Features:**

- Powerful 5 vane motors deliver high working speeds
- Heavy duty double tapered collet
- Teasing throttle for maximum control
- Lever throttle with lock-off
- Ball bearing construction
- Heavy Duty spiral bevel gearing for durability and smooth operation
- Compact angle head allows access into tight spaces
- Adjustable speed control
- Grease zerk in gear case

CE

**Right Angle Die Grinders**

| Model Number | Free Speed | Weight | | Length | | Sound Level | Air Consumption | | Collet Size | Exhaust |
|---|---|---|---|---|---|---|---|---|---|---|
| | rpm | lb | kg | in | mm | dB(A) | scfm | l/s | | |
| **0.30 hp (0.22 kw) - Lever Throttle** | | | | | | | | | | |
| SAG03S20 | 20,000 | 1.2 | 0.55 | 5.625 | 140 | 85.9 | 11 | 5.2 | 1/4" | Rear |
| SAG03S20M6 | 20,000 | 1.2 | 0.55 | 5.625 | 140 | 85.9 | 11 | 5.2 | 6 mm | Rear |
| SAG03S12 | 12,000 | 1.2 | 0.55 | 5.625 | 140 | 82.3 | 11 | 5.2 | 1/4" | Rear |
| SAG03S12M6 | 12,000 | 1.2 | 0.55 | 5.625 | 140 | 82.3 | 11 | 5.2 | 6 mm | Rear |
| **0.50 hp (0.37 kw) - Lever Throttle** | | | | | | | | | | |
| SAG05S23 | 23,000 | 1.4 | 0.64 | 6.375 | 160 | 86.0 | 23 | 10.8 | 1/4" | Rear |
| SAG05S23M6 | 23,000 | 1.4 | 0.64 | 6.375 | 160 | 86.0 | 23 | 10.8 | 6 mm | Rear |
| **1 hp (0.75 kw) - Lever Throttle** | | | | | | | | | | |
| SAG10S18 | 18,000 | 2.7 | 1.2 | 9.0 | 230 | 80.7 | 30 | 14 | 1/4" | Rear |
| SAG10S18M6 | 18,000 | 2.7 | 1.2 | 9.0 | 230 | 80.7 | 30 | 14 | 6 mm | Rear |
| SAG10S15 | 15,000 | 2.7 | 1.2 | 9.0 | 230 | 79.0 | 30 | 14 | 1/4" | Rear |
| SAG10S15M6 | 15,000 | 2.7 | 1.2 | 9.0 | 230 | 79.0 | 30 | 14 | 6 mm | Rear |
| SAG10S12 | 12,000 | 2.7 | 1.2 | 9.0 | 230 | 80.7 | 30 | 14 | 1/4" | Rear |
| SAG10S12M6 | 12,000 | 2.7 | 1.2 | 9.0 | 230 | 80.7 | 30 | 14 | 6 mm | Rear |

**General:**
Air Inlet Size: 1/4" NPT • Recommended Hose Size: 3/8" (10 mm) • Performance rated @ 90 psig (6.2 bar) air pressure
**Standard Equipment:**
Parts List • Safety and Instruction Manual • Collet, Support Handle (1 HP only) & Wrenches

# Pneumatische Stabschleifer

## PNEUMATIC STRAIGHT DIE GRINDER



SDG03S25



SDG7S25F



SDG05S23



SDG10S25F

**Heavy Duty Double Tapered Collet**

**Collet Nut** **Collet** **Collet Body**



| Part Number | Description |
|---|---|
| **Collet Sizes** | |
| 74071 | Collet Nut |
| 74072 | Collet (1/8") |
| 74073 | Collet (3/16") |
| 74074 | Collet (1/4") |
| 68030 | Collet (3/8") |
| 74075 | Collet (3 mm) |
| 74076 | Collet (6 mm) |
| 68056 | Collet (8 mm) |
| 77057 | Collet Body |
| 74070 | Collet Body (1 HP) |

**Features:**

- Powerful 5 vane motors deliver high working speeds
- Heavy duty double tapered collet
- Ergonomic comfort grip
- Teasing throttle for maximum control
- Lever throttle with lock-off
- Ball bearing construction
- Adjustable speed control

**Straight Die Grinders**

| Model Number | Free Speed | Weight | | Length | | Sound Level | Air Consumption | | Collet Size | Exhaust |
|---|---|---|---|---|---|---|---|---|---|---|
| | rpm | lb | kg | in | mm | dB(A) | scfm | l/s | | |
| **0.30 hp (0.22 kw) - Lever Throttle** | | | | | | | | | | |
| SDG03S25 | 25,000 | 1.0 | 0.45 | 6.25 | 160 | 83.3 | 11 | 5.2 | 1/4" | Rear |
| SDG03S25M6 | 25,000 | 1.0 | 0.45 | 6.25 | 160 | 83.3 | 11 | 5.2 | 6 mm | Rear |
| **0.50 hp (0.37 kw) - Lever Throttle** | | | | | | | | | | |
| SDG05S23 | 23,000 | 1.2 | 0.54 | 7.0 | 180 | 85.1 | 23 | 10.9 | 1/4" | Rear |
| SDG05S23M6 | 23,000 | 1.2 | 0.54 | 7.0 | 180 | 85.1 | 23 | 10.9 | 6 mm | Rear |
| SDG05S18 | 18,000 | 1.2 | 0.54 | 7.0 | 180 | 87.4 | 23 | 10.9 | 1/4" | Rear |
| SDG05S18M6 | 18,000 | 1.2 | 0.54 | 7.0 | 180 | 87.4 | 23 | 10.9 | 6 mm | Rear |
| **0.70 hp (0.52 kw) - Lever Throttle** | | | | | | | | | | |
| SDG7S25F | 25,000 | 1.2 | 0.6 | 6.0 | 150 | 79.6 | 25 | 12 | 1/4" | Front |
| SDG7S25M6F | 25,000 | 1.2 | 0.6 | 6.0 | 150 | 79.6 | 25 | 12 | 6 mm | Front |
| SDG7S18F | 18,000 | 1.2 | 0.6 | 6.0 | 150 | 81.8 | 25 | 12 | 1/4" | Front |
| SDG7S18M6F | 18,000 | 1.2 | 0.6 | 6.0 | 150 | 81.8 | 25 | 12 | 6 mm | Front |
| **1 hp (0.75 kw) - Lever Throttle** | | | | | | | | | | |
| SDG10S25F | 25,000 | 1.7 | 0.8 | 7.5 | 190 | 83.3 | 30 | 14 | 1/4" | Front |
| SDG10S25M6F | 25,000 | 1.7 | 0.8 | 7.5 | 190 | 83.3 | 30 | 14 | 6 mm | Front |
| SDG10S25R | 25,000 | 1.7 | 0.8 | 7.5 | 190 | 81.1 | 30 | 14 | 1/4" | Rear |
| SDG10S25M6R | 25,000 | 1.7 | 0.8 | 7.5 | 190 | 81.1 | 30 | 14 | 6 mm | Rear |
| SDG10S18F | 18,000 | 1.7 | 0.8 | 7.5 | 190 | 80.3 | 30 | 14 | 1/4" | Front |
| SDG10S18M6F | 18,000 | 1.7 | 0.8 | 7.5 | 190 | 80.3 | 30 | 14 | 6 mm | Front |
| SDG10S18R | 18,000 | 1.7 | 0.8 | 7.5 | 190 | 76.4 | 30 | 14 | 1/4" | Rear |
| SDG10S18M6R | 18,000 | 1.7 | 0.8 | 7.5 | 190 | 76.4 | 30 | 14 | 6 mm | Rear |
| SDG10S12F | 12,000 | 1.7 | 0.8 | 7.5 | 190 | 85.9 | 30 | 14 | 1/4" | Front |
| SDG10S12M6F | 12,000 | 1.7 | 0.8 | 7.5 | 190 | 85.9 | 30 | 14 | 6 mm | Front |
| SDG10S12R | 12,000 | 1.7 | 0.8 | 7.5 | 190 | 85.9 | 30 | 14 | 1/4" | Rear |
| SDG10S12M6R | 12,000 | 1.7 | 0.8 | 7.5 | 190 | 85.9 | 30 | 14 | 6 mm | Rear |

**General:**
Air Inlet Size: 1/4" NPT • Recommended Hose Size: 3/8" (10 mm) • Performance rated @ 90 psig (6.2 bar) air pressure

**Standard Equipment:**
Parts List • Safety and Instruction Manual • Collet & Wrenches

# ZT3000A POSITIVE FEED DRILL

ZEPHYR® TOOL

## Design and Features Characteristics

Zephyr's new ZT3000A Positive Feed Drill offers a high power to weight ratio in a compact modular design with ease of operation and maintenance in mind. In addition to its unique features, the ZT3000A offers a wider range of RPM's and feed rates than any other tool in its class. One spindle size (1/2 in.) is used for the full range of RPM's and feed rate configurations.

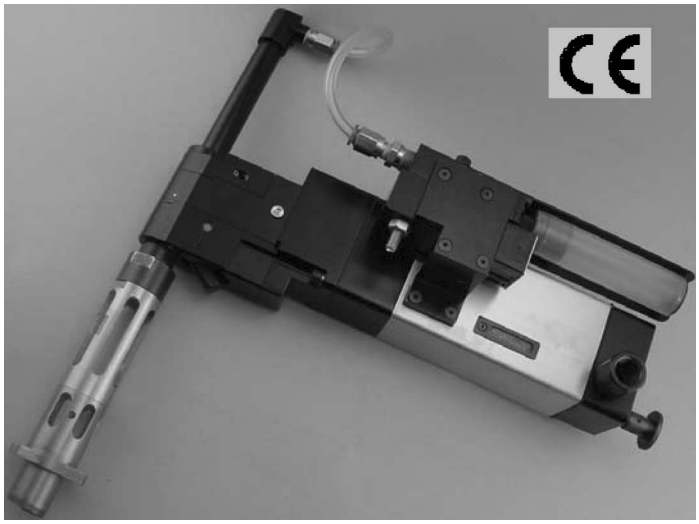

**Capacity**
Aluminum 1.25" (31.75 mm)
Steel .75" (19.05mm)
Titanium .75" (19.05mm)

**Stroke**
Minimum .375" (9.525mm)
Maximum unlimited

**RPM**
200, 300, 450, 650, 900, 1800, 2800 and 4200 RPM

**Feed Rate**
.001, .002, .003, .004, .005, .006, .007 and .008 IPR

**Weight** 6.7 lbs - 3.0 Kg

**Features:**

1. 1.75 HP motor

2. Right Angle design for close quarter application

3. Designed for oil hole application

4. Spindle utilize 9/16-18 internal thread for standard thread shank drill (adapter for different thread sizes available)

5. One size spindle that can be used for the full range of RPM's and feed rate configurations

6. Advance Air Logic System

- Pull to start/ push to stop
- Auto retract at the end of drilling cycle
- Auto shut off at the completion of the retract cycle
- The tool can start in either feed or the retract mode
- The spindle can be retracted at any given point during the feed cycle by depressing the retract button
- Rapid spindle retraction

**Modular Design**

1. Air motor housing sub-assembly

- To maximize accessibility, the air hose can be attached into one of the three inlet port locations on the air motor housing
- The air motor housing is easily adapted to any on–board coolant system, such as the Unist Mini-Back lubricators

2. Gear reducer sub-assembly

- Modular designed gear reducers use fewer components while offering a wide range of RPM's

3. Drill head module

- The drill head module can be configured to any of its standard feed rates by simply changing two gears
- Spindle guard sub-assembly can be quickly attached to either on-board coolant system or to any outside coolant system

4. Nose piece Index Mechanism

- Easy access simple to operate index lever
- Allows orientation of the tool around drill axis in 30º increments

5. No adapter needed for standard 1-20 thread nosepiece

# ZT3000I POSITIVE FEED DRILL

ZEPHYR® TOOL

## Design and Features Characteristics

Zephyr's new ZT3000IA Inline Positive Feed Drill offers a high power to weight ratio in a compact modular design with ease of operation and maintenance in mind. In addition to its unique features, the ZT3000I offers a wider range of RPM's and feed rates than any other tool in its class. One spindle size (1/2 in.) is used for the full range of RPM's and feed rate configurations.

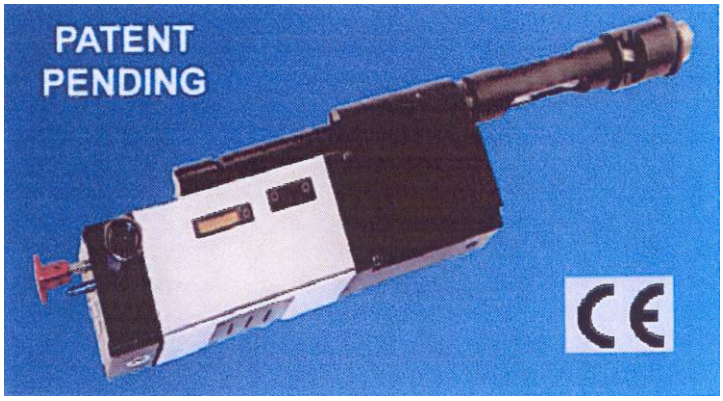


All Parts of the New ZT3000I are interchangeable with the ZT3000A Right Angle Positive Feed Drill.

**Capacity**
Aluminum 1.25" (31.75 mm)
Steel .75" (19.05mm)
Titanium .75" (19.05mm)

**Stroke**
Minimum .375" (9.525mm)
Maximum unlimited

**RPM**
200, 300, 450, 650, 900, 1800, 2800 and 4200 RPM

**Feed Rate**
.001, .002, .003, .004, .005, .006, .007 and .008 IPR

**Weight** 8.0 lbs - 3.6 Kg

**Features:**

1. 1.75 HP motor

2. Right Angle design for close quarter application

3. Designed for oil hole application

4. Spindle utilize 9/16-18 internal thread for standard thread shank drill (adapter for different thread sizes available)

5. One size spindle that can be used for the full range of RPM's and feed rate configurations

6. Advance Air Logic System

- Pull to start/ push to stop
- Auto retract at the end of drilling cycle
- Auto shut off at the completion of the retract cycle
- The tool can start in either feed or the retract mode
- The spindle can be retracted at any given point during the feed cycle by depressing the retract button
- Rapid spindle retraction

**Modular Design**

1. Air motor housing sub-assembly

- To maximize accessibility, the air hose can be attached into one of the three inlet port locations on the air motor housing
- The air motor housing is easily adapted to any on–board coolant system, such as the Unist Mini-Back lubricators

2. Gear reducer sub-assembly

- Modular designed gear reducers use fewer components while offering a wide range of RPM's

3. Drill head module

- The drill head module can be configured to any of its standard feed rates by simply changing two gears
- Spindle guard sub-assembly can be quickly attached to either on-board coolant system or to any outside coolant system

4. Nose piece Index Mechanism

- Easy access simple to operate index lever
- Allows orientation of the tool around drill axis in 30º increments

5. No adapter needed for standard 1-20 thread nosepiece

# ANNIETMUTTER-BOHRMASCHINE

## NUTPLATE DRILLMOTOR

## NPDM-II B

- Einhandbedienung ermöglicht das Bohren und Senken der beiden Nietenlöcher innerhalb von 4 Sekunden.
- Das Werkzeug kann leicht von einem Nietenlochabstand in einen anderen geändert werden, durch Austauschen von Fußteil und Spindelblock

- ONE HAND OPERATION TO LOCATE, DRILL AND COUNTERSINK BOTH RIVET HOLES IN A SINGLE 4 SECOND OPERATION
- TOOL IS EASILY CONVERTED FROM ONE RIVET HOLE SPACING TO ANOTHER BY INTERCHANGING THE FOOT ATTACHMENTS AND SPINDLE SPACER BLOCK

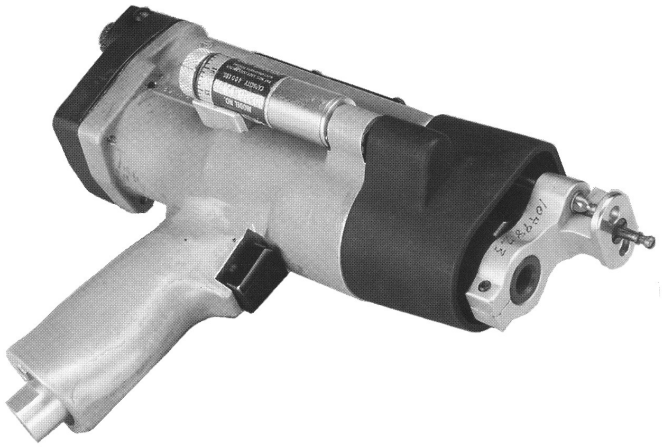

**Standardmerkmale:**

- ergonomischer Entwurf
- regelbarer Vorschub
- Standardfüße, Spannzangen und Dorne wie bei älterem Modell
- 1,36 kg leichter als älteres Modell
- Annietmutter-Spindelabstände von 5,56 mm bis 28,57 mm.
- gebräuchliche metrische Bohrabstände sind auf Anfrage verfügbar

**Standard Features:**

- ergonomic design
- fully adjustable feed rate
- standard foot assembly, collet-mandrel and cutters from older model
- 3 lbs. lighter than older model
- accommodates all nutplate spindle spacings from .219 to 1.125 inches.
- popular metric spacings available on special request

**Optionales Zubehör:**

- C-Bügel Fußteil für das Arbeiten an Profilkanten
- Überdruckpumpe zur Erhöhung der Klemm- und Bohrkraft beim Bohren in zähen Materialien
- Kühlflüssigkeitssystem für verbesserte Standzeiten.
- Abluftrichtung nach vorne, hinten, rechts oder links

**Optional Features:**

- c-yoke foot attachment for work edge application
- booster pump to increase clamp and thrust forces for drilling in tough materials
- coolant-lubricant system for improved cycle time and increased drill life
- forward, rearward, right or left exhaust direction

| | | |
|---|---|---|
| **Hublänge des Bohrer** | DRILL STROKE LENGTH | **0.500 inches / 12,7 mm** |
| **Lieferbare Spindeldrehzahlen** | AVAILABLE SPINDLE SPEEDS | **600 and 7,000 RPM / 600 und 7000 UPM** |
| **Vorschub pro Umdrehung** | FEED RATE RANGE PER REVOLUTION | **0.001 to 0.012 inches / 0,025 mm bis 0,305 mm** |
| **Motorleistung** | AIR MOTOR POWER | **0.54 HP / 0,4 KW** |
| **Betriebsluftverbrauch max.** | OPERATING MAXIMUM AIR CONSUMPTION | **18CFM at 90PSI** |
| **Spannzangenklemmbereich** | COLLET STROKE LENGTH | **0.250 inch / 6,35 mm** |
| **Gewicht** | WEIGHT | **4.75 lbs. / 2,15 kg** |

## ANNIETMUTTER-BOHRSENKER

## NUTPLATE COUNTERSINK DRILL

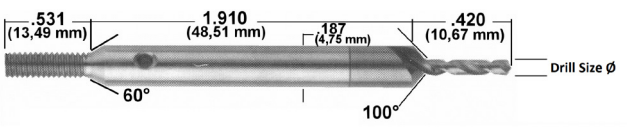


GEWINDE/THREAD 8-32

| Artikel-Nummer / PART NO.: | Drill Size | |
|---|---|---|
| **HPD30C-100-35-8** | **#30 (3,26mm)** | **Vollhartmetall** / SOLID CARBIDE |
| **HPD30M42-100-35-8** | **#30 (3,26mm)** | **HSS-E (Cobalt)** / COBALT |
| **HPD40C-100-35-8** | **#40 (2,50mm)** | **Vollhartmetall** / SOLID CARBIDE |
| **HPD40M42-100-35-8** | **#40 (2,50mm)** | **HSS-E (Cobalt)** / COBALT |

**Andere Abmessungen auf Anfrage** / OTHER DIMENSIONS ON REQUEST

# Cleco Variable Speed Air Drills



- Calibrated dial on rear of tool simplifies drill speed selection
- Choice of three governed speed models to match material
- Can be used with feed assist for accurate, perpendicular holes
- Includes keyed chuck

| 3/8” Capaciy - 0.7 hp (0.52 kW) - Non-Reversible | | | | |
|---|---|---|---|---|
| **Art.Nr./PART NO.** | **RPM (no load)** | **RPM (governed)** | **Overall Length** | **Weight** |
| 135DPV-7B-43 | 600 | 150 - 550 | 9-5/8” (244 mm) | 3.625 lbs (1.6 kg) |
| 135DPV -14B-51 | 1250 | 400 - 1200 | 9-1/4” (235 mm) | 3.375 lbs (1.5 kg) |
| 135DPV -28B-51 | 2600 | 700 - 2400 | 8-1/2” (216 mm) | 3.125 lbs (1.4 kg) |

| 1/2” Capaciy - 0.7 hp (0.52 kW) - Non-Reversible | | | | |
|---|---|---|---|---|
| **Art.Nr./PART NO.** | **RPM (no load)** | **RPM (governed)** | **Overall Length** | **Weight** |
| 135DPV-7B-50* | 600 | 150 - 550 | 9-5/8” (244 mm) | 3.625 lbs (1.6 kg) |
| 135DPV-14B-50* | 1250 | 400 - 1200 | 9-1/4” (235 mm) | 3.375 lbs (1.5 kg) |

| **Support Handle** |  |
|---|---|
| **Art.Nr./PART NO.** | **Description** |
| 861006 | * 135DPV Drills must be equipped with support handle (861006) if 1/2" (13mm) capacity chuck is specified. |

## Boelube Lubricant

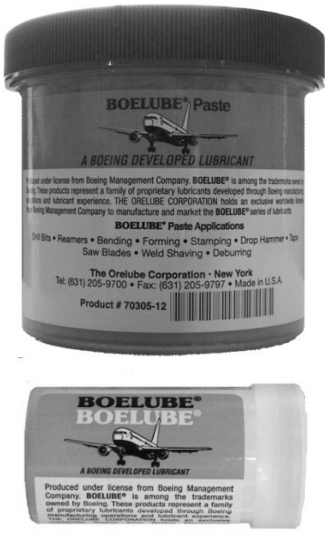


- High-strength polar lubricating film reduces friction & heat generation.
- Greatly improves tool life, surface finish & hole quality.
- Superior lubricity when machining aluminum, titanium and inconel.
- Non-corrosive, non-flammable, chemically stable, with no hazardous substance.

| **Art.Nr./PART NO.** | **Type** | **Size** |
|---|---|---|
| 70200-00 | Solid | 14.5 Oz. Cartridge |
| 70200-13 | | 1.6 Oz. Push Tube |
| 70200-40 | | 3.5 Oz. Push Tube |
| 70302-12 | Paste / Soft / Blue | 12 Oz. Jar |
| 70307-12 | Paste / Medium / Blue | 12 Oz. Jar |
| 70305-12 | Paste / Hard / Pink | 12 Oz. Jar |
| 70104-04 | Liquid | 1 Gallon Pail |
| 70104-05 | | 5 Gallon Pail |
| 70104-07 | | 15 Gallon Drum |
| 70104-09 | | 55 Gallon Drum |

# Pneumatische Bohrmaschinen Pistolenform
# PNEUMATIC PISTOL GRIP DRILLS




**Performance:**
Power: 0.33 hp (0.25 kw) - 1 hp (0.75 kw)
Speed Range: 360 rpm - 6000 rpm
Chuck Capacity: 1/4" (6 mm) - 1/2" (13 mm)

**Features:**
Reversible and Non-Reversible
Trigger Start
Rotatable Exhaust (0.33 hp models)
Rubber Grip

CE

**Pistol Grip Drills**

| Model Number | Chuck Capacity | | Free Speed | Weight | | Length | | Side To Center | | Maximum Air Consumption | | Sound Level | Spindle Thread |
|---|---|---|---|---|---|---|---|---|---|---|---|---|---|
| | in. | mm | rpm | lb | kg | in. | mm | in. | mm | cfm | l/s | dB(A) | |
| **.33 hp (0.25 kw) - Non-reversible** | | | | | | | | | | | | | |
| 1410 | 1/4 | 6 | 2600 | 1.3 | 0.60 | 6.3 | 160 | 0.6 | 15 | 12 | 6 | 75 | 3/8"-24 |
| DR1412 | 1/4 | 6 | 3600 | 1.3 | 0.60 | 6.3 | 160 | 0.6 | 15 | 12 | 6 | 75 | 3/8"-24 |
| DR1414 | 1/4 | 6 | 4300 | 1.3 | 0.60 | 6.3 | 160 | 0.6 | 15 | 12 | 6 | 75 | 3/8"-24 |
| DR1416 | 1/4 | 6 | 6000 | 1.3 | 0.60 | 6.3 | 160 | 0.6 | 15 | 12 | 6 | 75 | 3/8"-24 |
| **1 hp (0.75 kw) - Non-reversible** | | | | | | | | | | | | | |
| SDR10P60N2 | 1/4 | 6 | 6000 | 2.3 | 1.05 | 6.5 | 165 | 0.8 | 20 | 30 | 14 | 80 | 3/8"-24 |
| SDR10P60N3 | 3/8 | 10 | 6000 | 2.5 | 1.10 | 7.0 | 180 | 0.8 | 20 | 30 | 14 | 80 | 3/8"-24 |
| SDR10P40N2 | 1/4 | 6 | 4000 | 2.3 | 1.05 | 6.5 | 165 | 0.8 | 20 | 30 | 14 | 80 | 3/8"-24 |
| SDR10P40N3 | 3/8 | 10 | 4000 | 2.5 | 1.10 | 7.0 | 180 | 0.8 | 20 | 30 | 14 | 80 | 3/8"-24 |
| SDR10P26N2 | 1/4 | 6 | 2600 | 2.3 | 1.05 | 6.5 | 165 | 0.8 | 20 | 30 | 14 | 80 | 3/8"-24 |
| SDR10P26N3 | 3/8 | 10 | 2600 | 2.5 | 1.10 | 7.0 | 180 | 0.8 | 20 | 30 | 14 | 80 | 3/8"-24 |
| SDR10P26N4 | 1/2 | 13 | 2600 | 2.9 | 1.30 | 7.5 | 190 | 0.8 | 20 | 30 | 14 | 80 | 1/2"-20 |
| SDR10P12N3 | 3/8 | 10 | 1200 | 2.9 | 1.30 | 8.0 | 205 | 0.8 | 20 | 30 | 14 | 80 | 3/8"-24 |
| SDR10P7N3 | 3/8 | 10 | 700 | 2.9 | 1.30 | 8.0 | 205 | 0.8 | 20 | 30 | 14 | 80 | 1/2"-20 |
| SDR10P7N4 | 1/2 | 13 | 700 | 3.3 | 1.50 | 8.5 | 215 | 0.8 | 20 | 30 | 14 | 80 | 1/2"-20 |
| SDR10P4N3 | 3/8 | 10 | 400 | 2.9 | 1.30 | 8.0 | 205 | 0.8 | 20 | 30 | 14 | 80 | 1/2"-20 |
| SDR10P4N4 | 1/2 | 13 | 400 | 3.3 | 1.50 | 8.5 | 215 | 0.8 | 20 | 30 | 14 | 80 | 1/2"-20 |
| **1 hp (0.75 kw) - Non-reversible** | | | | | | | | | | | | | |
| 3P1530 | 3/8 | 10 | 2150 | 4.3 | 2.00 | 7.5 | 190 | 1-1/32 | 26 | 33 | 15 | 80 | 1/2"-20 |
| 3P1430 | 3/8 | 10 | 1400 | 5.0 | 2.30 | 8.8 | 224 | 1-1/32 | 26 | 33 | 15 | 80 | 1/2"-20 |
| 3P1640 | 1/2 | 13 | 2650 | 4.3 | 2.00 | 7.5 | 190 | 1-1/32 | 26 | 33 | 15 | 80 | 1/2"-20 |
| 3P1340 | 1/2 | 13 | 1000 | 5.0 | 2.30 | 8.8 | 224 | 1-1/32 | 26 | 33 | 15 | 80 | 1/2"-20 |
| 3P1240 | 1/2 | 13 | 650 | 5.0 | 2.30 | 8.8 | 224 | 1-1/32 | 26 | 33 | 15 | 80 | 1/2"-20 |
| 3P1140 | 1/2 | 13 | 360 | 5.0 | 2.30 | 8.8 | 224 | 1-1/32 | 26 | 33 | 15 | 80 | 1/2"-20 |
| **1 hp (0.75 kw) - Non-reversible With Keyless Chuck** | | | | | | | | | | | | | |
| SDR10P60NK3 | 3/8 | 10 | 6000 | 2.5 | 1.10 | 7.0 | 180 | 0.8 | 20 | 30 | 14 | 80 | 3/8"-24 |
| SDR10S40NK3 | 3/8 | 10 | 4000 | 2.3 | 1.05 | 8.3 | 210 | 0.8 | 19 | 30 | 14 | 78 | 3/8"-24 |
| SDR10P26NK3 | 3/8 | 10 | 2600 | 2.3 | 1.00 | 6.3 | 160 | 0.8 | 20 | 25 | 12 | 80 | 3/8"-24 |
| SDR10P26NK4 | 1/2 | 13 | 2600 | 2.7 | 1.20 | 6.6 | 170 | 0.8 | 20 | 25 | 12 | 80 | 1/2"-20 |
| SDR10P12NK3 | 3/8 | 10 | 1200 | 2.7 | 1.20 | 7.3 | 185 | 0.8 | 20 | 25 | 12 | 80 | 3/8"-24 |
| SDR10P7NK4 | 1/2 | 13 | 700 | 3.1 | 1.40 | 7.8 | 200 | 0.8 | 20 | 25 | 12 | 80 | 1/2"-20 |
| SDR10P4NK4 | 1/2 | 13 | 400 | 3.1 | 1.40 | 7.8 | 200 | 0.8 | 20 | 25 | 12 | 80 | 1/2"-20 |

# Pneumatische Bohrmaschinen Pistolenform
# PNEUMATIC PISTOL GRIP DRILLS




**Performance:**
Power: 0.20 hp (0.15 kw) - 1 hp (0.75 kw)
Speed Range: 300 rpm - 6000 rpm
Chuck Capacity: 1/4" (6 mm) - 1/2" (13 mm)

**Features:**
Reversible and Non-Reversible
Trigger Start
Rotatable Exhaust (1410 series models)
Rubber Grip

CE

**Pistol Grip Drills**

| Model Number | Chuck Capacity | | Free Speed | Weight | | Length | | Side To Center | | Maximum Air Consumption | | Sound Level | Spindle Thread |
|---|---|---|---|---|---|---|---|---|---|---|---|---|---|
| | in. | mm | rpm | lb | kg | in. | mm | in. | mm | cfm | l/s | dB(A) | |
| **.60 hp (0.45 kw) - Non-Reversible** | | | | | | | | | | | | | |
| SDR6P60N2 | 1/4 | 6 | 6000 | 2.1 | 0.95 | 5.8 | 145 | 0.8 | 20 | 25 | 12 | 80 | 3/8"-24 |
| SDR6P60N3 | 3/8 | 10 | 6000 | 2.3 | 1.00 | 6.3 | 160 | 0.8 | 20 | 25 | 12 | 80 | 3/8"-24 |
| SDR6P40N2 | 1/4 | 6 | 4000 | 2.1 | 0.95 | 5.8 | 145 | 0.8 | 20 | 25 | 12 | 80 | 3/8"-24 |
| SDR6P40N3 | 3/8 | 10 | 4000 | 2.3 | 1.00 | 6.3 | 160 | 0.8 | 20 | 25 | 12 | 80 | 3/8"-24 |
| SDR6P26N2 | 1/4 | 6 | 2600 | 2.1 | 0.95 | 5.8 | 145 | 0.8 | 20 | 25 | 12 | 80 | 3/8"-24 |
| SDR6P26N3 | 3/8 | 10 | 2600 | 2.3 | 1.00 | 6.3 | 160 | 0.8 | 20 | 25 | 12 | 80 | 3/8"-24 |
| SDR6P26N4 | 1/2 | 13 | 2600 | 2.7 | 1.20 | 6.6 | 170 | 0.8 | 20 | 25 | 12 | 80 | 1/2"-20 |
| SDR6P12N3 | 3/8 | 10 | 1200 | 2.7 | 1.20 | 7.3 | 185 | 0.8 | 20 | 25 | 12 | 80 | 1/2"-20 |
| SDR6P7N3 | 3/8 | 10 | 700 | 2.7 | 1.20 | 7.3 | 185 | 0.8 | 20 | 25 | 12 | 80 | 1/2"-20 |
| SDR6P7N4 | 1/2 | 13 | 700 | 3.1 | 1.40 | 7.8 | 200 | 0.8 | 20 | 25 | 12 | 80 | 1/2"-20 |
| SDR6P4N3 | 3/8 | 10 | 400 | 2.7 | 1.20 | 7.3 | 185 | 0.8 | 20 | 25 | 12 | 80 | 1/2"-20 |
| SDR6P4N4 | 1/2 | 13 | 400 | 3.1 | 1.40 | 7.8 | 200 | 0.8 | 20 | 25 | 12 | 80 | 1/2"-20 |
| **.60 hp (0.45 kw) - Non-Reversible With Keyless Chuck** | | | | | | | | | | | | | |
| SDR6P60NK3 | 3/8 | 10 | 6000 | 2.3 | 1.00 | 6.3 | 160 | 0.8 | 20 | 25 | 12 | 80 | 3/8"-24 |
| SDR6P40NK3 | 3/8 | 10 | 4000 | 2.3 | 1.00 | 6.3 | 160 | 0.8 | 20 | 25 | 12 | 80 | 3/8"-24 |
| SDR6P26NK3 | 3/8 | 10 | 2600 | 2.3 | 1.00 | 6.3 | 160 | 0.8 | 20 | 25 | 12 | 80 | 3/8"-24 |
| **.20 hp (0.15 kw) - Reversible** | | | | | | | | | | | | | |
| 1412R | 1/4 | 6 | 2600 | 1.3 | 0.60 | 6.3 | 160 | 0.6 | 15 | 10 | 5 | 75 | 3/8"-24 |
| 1410R | 1/4 | 6 | 2000 | 1.3 | 0.60 | 6.3 | 160 | 0.6 | 15 | 10 | 5 | 75 | 3/8"-24 |
| **0.80 hp (0.60 kw) - Reversible** | | | | | | | | | | | | | |
| 3P2340 | 1/2 | 13 | 850 | 5.0 | 2.30 | 8.8 | 224 | 1-1/32 | 26 | 33 | 15 | 81 | 1/2"-20 |
| 3P2140 | 1/2 | 13 | 300 | 5.0 | 2.30 | 8.8 | 224 | 1-1/32 | 26 | 33 | 15 | 81 | 1/2"-20 |
| **1 hp (0.75 kw) - Reversible** | | | | | | | | | | | | | |
| SDR10P40R2 | 1/4 | 6 | 4000 | 2.4 | 1.10 | 7.1 | 180 | 0.8 | 20 | 30 | 14 | 80 | 3/8"-24 |
| SDR10P40R3 | 3/8 | 10 | 4000 | 2.6 | 1.15 | 7.6 | 195 | 0.8 | 20 | 30 | 14 | 80 | 3/8"-24 |
| SDR10P25R2 | 1/4 | 6 | 2500 | 2.4 | 1.10 | 7.1 | 180 | 0.8 | 20 | 30 | 14 | 80 | 3/8"-24 |
| SDR10P25R3 | 3/8 | 10 | 2500 | 2.6 | 1.15 | 7.6 | 195 | 0.8 | 20 | 30 | 14 | 80 | 3/8"-24 |
| SDR10P20R2 | 1/4 | 6 | 2000 | 2.4 | 1.10 | 7.1 | 180 | 0.8 | 20 | 30 | 14 | 80 | 3/8"-24 |
| SDR10P20R3 | 3/8 | 10 | 2000 | 2.6 | 1.15 | 7.6 | 195 | 0.8 | 20 | 30 | 14 | 80 | 3/8"-24 |
| SDR10P20R4 | 1/2 | 13 | 2000 | 3.0 | 1.35 | 7.9 | 200 | 0.8 | 20 | 30 | 14 | 80 | 1/2"-20 |
| SDR10P7R3 | 3/8 | 10 | 700 | 3.1 | 1.40 | 8.6 | 220 | 0.8 | 20 | 30 | 14 | 80 | 3/8"-24 |
| SDR10P7R4 | 3/8 | 10 | 700 | 3.6 | 1.60 | 9.1 | 230 | 0.8 | 20 | 30 | 14 | 80 | 1/2"-20 |
| SDR10P5R3 | 3/8 | 10 | 500 | 3.1 | 1.40 | 8.6 | 220 | 0.8 | 20 | 30 | 14 | 80 | 1/2"-20 |
| SDR10P5R4 | 1/2 | 13 | 500 | 3.6 | 1.60 | 9.1 | 230 | 0.8 | 20 | 30 | 14 | 80 | 1/2"-20 |
| SDR10P3R3 | 3/8 | 10 | 300 | 3.1 | 1.40 | 8.6 | 220 | 0.8 | 20 | 30 | 14 | 80 | 1/2"-20 |
| SDR10P3R4 | 1/2 | 13 | 300 | 3.6 | 1.60 | 9.1 | 230 | 0.8 | 20 | 30 | 14 | 80 | 1/2"-20 |

# Pneumatische Bohrmaschinen in gerader Form
# PNEUMATIC STRAIGHT DRILLS

## STRAIGHT DRILLS



SDR10S25R3



SDR10S26N3



1420

**Performance:**
Power: 0.33 hp (0.25 kw) - 1 hp (0.75 kw)
Speed Range: 300 rpm - 6000 rpm
Chuck Capacity: 1/4" (6 mm) - 1/2" (13 mm)

**Features:**
Reversible and Non-Reversible
Lever Start
Rubber Grip (1420, 1422)

CE

**Straight Drills**

| Model Number | Chuck Capacity | | Free Speed | Weight | | Length | | Side To Center | | Maximum Air Consumption | | Sound Level | Spindle Thread |
|---|---|---|---|---|---|---|---|---|---|---|---|---|---|
| | in. | mm | rpm | lb | kg | in. | mm | in. | mm | cfm | l/s | dB(A) | |
| **.33 hp (0.25 kw) - Non-reversible** | | | | | | | | | | | | | |
| 1422 | 1/4 | 6 | 3600 | 1.2 | 0.54 | 8.0 | 203 | .6 | 15 | 12 | 6 | 75 | 3/8"-24 |
| 1420 | 1/4 | 6 | 2600 | 1.2 | 0.54 | 8.0 | 203 | .6 | 15 | 12 | 6 | 75 | 3/8"-24 |
| **1 hp (0.75 kw) - Non-reversible** | | | | | | | | | | | | | |
| SDR10S60N2 | 1/4 | 6 | 6000 | 2.3 | 1.05 | 8.3 | 211 | 0.8 | 19 | 30 | 14 | 78 | 3/8"-24 |
| SDR10S60N3 | 3/8 | 10 | 6000 | 2.3 | 1.05 | 8.3 | 211 | 0.8 | 19 | 30 | 14 | 78 | 3/8"-24 |
| SDR10S40N2 | 1/4 | 6 | 4000 | 2.3 | 1.05 | 8.3 | 211 | 0.8 | 19 | 30 | 14 | 78 | 3/8"-24 |
| SDR10S40N3 | 3/8 | 10 | 4000 | 2.3 | 1.05 | 8.3 | 211 | 0.8 | 19 | 30 | 14 | 78 | 3/8"-24 |
| SDR10S26N2 | 1/4 | 6 | 2600 | 2.3 | 1.05 | 8.3 | 211 | 0.8 | 19 | 30 | 14 | 78 | 3/8"-24 |
| SDR10S26N3 | 3/8 | 10 | 2600 | 2.3 | 1.05 | 8.3 | 211 | 0.8 | 19 | 30 | 14 | 78 | 3/8"-24 |
| SDR10S12N3 | 3/8 | 10 | 1200 | 2.8 | 1.25 | 9.3 | 236 | 0.8 | 19 | 30 | 14 | 78 | 3/8"-24 |
| SDR10S7N3 | 3/8 | 10 | 700 | 2.8 | 1.25 | 9.3 | 236 | 0.8 | 19 | 30 | 14 | 78 | 3/8"-24 |
| SDR10S4N3 | 3/8 | 10 | 400 | 2.8 | 1.25 | 9.3 | 236 | 0.8 | 19 | 30 | 14 | 78 | 3/8"-24 |
| SDR10S4N4 | 1/2 | 13 | 400 | 2.8 | 1.25 | 9.3 | 236 | 0.8 | 19 | 30 | 14 | 78 | 1/2"-20 |
| **1 hp (0.75 kw) - Reversible** | | | | | | | | | | | | | |
| SDR10S25R2 | 1/4 | 6 | 2500 | 2.2 | 1.00 | 9.3 | 235 | 0.8 | 19 | 30 | 14 | 78 | 3/8"-24 |
| SDR10S25R3 | 3/8 | 10 | 2500 | 2.3 | 1.05 | 9.8 | 248 | 0.8 | 19 | 30 | 14 | 78 | 3/8"-24 |
| SDR10S20R2 | 1/4 | 6 | 2000 | 2.2 | 1.00 | 9.3 | 235 | 0.8 | 19 | 30 | 14 | 78 | 3/8"-24 |
| SDR10S20R3 | 3/8 | 10 | 2000 | 2.3 | 1.05 | 9.8 | 248 | 0.8 | 19 | 30 | 14 | 78 | 3/8"-24 |
| SDR10S20R4 | 1/2 | 10 | 2000 | 2.8 | 1.25 | 10.3 | 260 | 0.8 | 19 | 30 | 14 | 78 | 1/2"-20 |
| SDR10S12R3 | 3/8 | 10 | 1200 | 2.8 | 1.25 | 10.8 | 273 | 0.8 | 19 | 30 | 14 | 78 | 3/8"-24 |
| SDR10S12R4 | 1/2 | 13 | 1200 | 3.2 | 1.45 | 11.3 | 285 | 0.8 | 19 | 30 | 14 | 78 | 1/2"-20 |
| SDR10S7R3 | 3/8 | 10 | 700 | 2.8 | 1.25 | 10.8 | 273 | 0.8 | 19 | 30 | 14 | 78 | 1/2"-20 |
| SDR10S7R4 | 1/2 | 13 | 700 | 3.2 | 1.45 | 11.3 | 285 | 0.8 | 19 | 30 | 14 | 78 | 1/2"-20 |
| SDR10S5R3 | 3/8 | 10 | 500 | 2.8 | 1.25 | 10.8 | 273 | 0.8 | 19 | 30 | 14 | 78 | 1/2"-20 |
| SDR10S5R4 | 1/2 | 13 | 500 | 3.2 | 1.45 | 11.3 | 285 | 0.8 | 19 | 30 | 14 | 78 | 1/2"-20 |
| SDR10S3R3 | 3/8 | 10 | 300 | 2.8 | 1.25 | 10.8 | 273 | 0.8 | 19 | 30 | 14 | 78 | 1/2"-20 |
| SDR10S3R4 | 1/2 | 13 | 300 | 3.2 | 1.45 | 11.3 | 285 | 0.8 | 19 | 30 | 14 | 78 | 1/2"-20 |

# Pneumatische Winkelbohrmaschinen
# PNEUMATIC ANGLE DRILLS

## MINIATURE ANGLE DRILLS



1AM1551B



2L1380



1AM1541



1AM1141SRK

**Performance:**
Power: 0.33 hp (0.25 kw) - 0.75 hp (0.56 kw)
Speed Range: 540 rpm - 5800 rpm

**Features:**
Non-Reversible
Lever Start
45˚ or 90˚ Minature Angle Heads (except 2L1380)
180˚ Adjustable Rotating Head (2L1380)

CE

**Miniature Angle Drills**

| Model Number | Free Speed | Weight | | Length | | Side To Center | | Maximum Air Consumption | | Sound Level |
|---|---|---|---|---|---|---|---|---|---|---|
| | rpm | lb | kg | in. | mm | in. | mm | cfm | l/s | dB(A) |
| **45˚ Angle Head - .33 hp (0.25 kw) - 1/4"-28 Internal Thread Spindle** | | | | | | | | | | |
| 1AM1541 | 2800 | 1.5 | 0.7 | 10.2 | 259 | 0.3 | 8 | 12 | 6 | 75 |
| 1AM1441 | 2200 | 1.5 | 0.7 | 10.2 | 259 | 0.3 | 8 | 12 | 6 | 75 |
| **45˚ Angle Head - .75 hp (0.56 kw) - 1/4"-28 Internal Thread Spindle** | | | | | | | | | | |
| 2A1410-45 | 5800 | 2.7 | 1.3 | 12.0 | 305 | 0.3 | 8 | 28 | 13 | 85 |
| **90˚ Angle Head - .33 hp (0.25 kw) - 1/4"-28 Internal Thread Spindle** | | | | | | | | | | |
| 1AM1551B | 2800 | 1.5 | 0.7 | 9.7 | 246 | 0.3 | 8 | 12 | 6 | 75 |
| 1AM1451B | 2200 | 1.5 | 0.7 | 9.7 | 246 | 0.3 | 8 | 12 | 6 | 75 |
| **90˚ Angle Head - .33 hp (0.25 kw) - 9/32"-40 Internal Thread Spindle** | | | | | | | | | | |
| 1AM1552B | 2800 | 1.5 | 0.7 | 9.7 | 246 | 0.3 | 8 | 12 | 6 | 75 |
| 1AM1452B | 2200 | 1.5 | 0.7 | 9.7 | 246 | 0.3 | 8 | 12 | 6 | 75 |
| **90˚ Angle Head - .75 hp (0.56 kw) - 1/4"-28 Internal Thread Spindle** | | | | | | | | | | |
| 2A1410-AH | 5800 | 2.7 | 1.3 | 11.4 | 290 | 0.3 | 8 | 28 | 13 | 85 |
| 2A1510-AH | 540 | 3.1 | 1.4 | 12.8 | 325 | 0.3 | 8 | 28 | 13 | 85 |
| **180˚ Rotating Head - .75 hp (0.56 kw) - Chuck Capacity: #70 thru 1/4"** | | | | | | | | | | |
| 2L1380 | 3350 | 2.3 | 1.1 | 13.7 | 348 | 0.6 | 15 | 28 | 13 | 85 |
| **Sealant Removal Tool Kit** | | | | | | | | | | |
| 1AM1141/51K | 800 | 1.8 | .80 | 11.5 | 292 | 0.3 | 8 | 12 | 6 | 75 |
| Includes 1AM1151 (90˚ Angle Drill) and 65213 (45 Deg Angle Drill Head Assembly) | | | | | | | | | | |
| 1AM1141SRK | 800 | 1.8 | .80 | 11.5 | 292 | 0.3 | 8 | 12 | 6 | 75 |
| Includes 1AM1141 (45˚ Angle Drill) | | | | | | | | | | |
| 1AM1151SRK | 800 | 1.8 | .80 | 11.5 | 292 | 0.3 | 8 | 12 | 6 | 75 |
| Includes 1AM1151 (90˚ Angle Drill) | | | | | | | | | | |

# Desoutter Compact Angle Drills

## 30°/45° Angle - 0.4 hp (0.3 kW)





| 30° Angle - Spannzange bis 5mm / Collet for max. 5mm | | | | |
|---|---|---|---|---|
| **Part Number** | **Type** | **Free RPM** | **Overall Length** | **Weight** |
| DR300-T5500-T5-30 | Collet Typ A  | 5500 | 11-1/4" (286 mm) | 1.36 lbs |
| DR300-T4500-T5-30 | | 4500 | | 1.36 lbs |
| DR300-T3000-T5-30 | | 3000 | | 1.36 lbs |
| DR300-T2000-T5-30 | | 2000 | | 1.36 lbs |
| DR300-T1000-T5-30 | | 1000 | | 1.54 lbs |

| 45° Angle - Spannzange bis 5mm / Collet for max. 5mm | | | | |
|---|---|---|---|---|
| **Part Number** | **Type** | **Free RPM** | **Overall Length** | **Weight** |
| DR300-T5500-T5-45 | Collet Typ A  | 5500 | 11-1/4" (286 mm) | 1.49 lbs |
| DR300-T4500-T5-45 | | 4500 | | 1.49 lbs |
| DR300-T3000-T5-45 | | 3000 | | 1.49 lbs |
| DR300-T2000-T5-45 | | 2000 | | 1.49 lbs |
| DR300-T1000-T5-45 | | 1000 | | 1.49 lbs |

## 360° Angle 0.4 hp (0.3 kW)



| Spannzange bis 5mm / Collet for max. 5mm | | | | |
|---|---|---|---|---|
| **Part Number** | **Type** | **Free RPM** | **Overall Length** | **Weight** |
| DR300-T5500-T5-360 | Collet Typ A  | 5500 | 11-1/8" (283 mm) | 1.54 lbs |
| DR300-T4500-T5-360 | | 4500 | | 1.54 lbs |
| DR300-T3000-T5-360 | | 3000 | | 1.54 lbs |
| DR300-T2000-T5-360 | | 2000 | | 1.54 lbs |
| DR300-T1000-T5-360 | | 1000 | | 1.72 lbs |

| Spannzange bis 6,4mm / Collet for max. 6,4mm | | | | |
|---|---|---|---|---|
| **Part Number** | **Type** | **Free RPM** | **Overall Length** | **Weight** |
| DR300-T5500-T6-360 | Collet Typ B  | 5500 | 11-1/8" (283 mm) | 1.87 lbs |
| DR300-T4500-T6-360 | | 4500 | | 1.87 lbs |
| DR300-T3000-T6-360 | | 3000 | | 1.69 lbs |
| DR300-T2000-T6-360 | | 2000 | | 1.87 lbs |
| DR300-T1000-T6-360 | | 1000 | | 1.87 lbs |

## 90° Angle - 0.4 hp (0.3 kW)



| Spannzange bis 5mm / Collet for max. 5mm | | | | |
|---|---|---|---|---|
| **Part Number** | **Type** | **Free RPM** | **Overall Length** | **Weight** |
| DR300-T5500-T5-90 | Collet Typ A  | 5500 | 10-3/4" (273 mm) | 1.36 lbs |
| DR300-T4500-T5-90 | | 4500 | | 1.36 lbs |
| DR300-T3000-T5-90 | | 3000 | | 1.36 lbs |
| DR300-T2000-T5-90 | | 2000 | | 1.36 lbs |
| DR300-T1000-T5-90 | | 1000 | | 1.54 lbs |

| Spannzange bis 6,4mm / Collet for max. 6,4mm | | | | |
|---|---|---|---|---|
| **Part Number** | **Type** | **Free RPM** | **Overall Length** | **Weight** |
| DR300T-5500-T6-90 | Collet Typ B  | 5500 | 10-3/4" (273 mm) | 1.49 lbs |
| DR300T-4500-T6-90 | | 4500 | | 1.49 lbs |
| DR300T-3000-T6-90 | | 3000 | | 1.49 lbs |
| DR300T-2000-T6-90 | | 2000 | | 1.49 lbs |
| DR300T-1000-T6-90 | | 1000 | | 1.67 lbs |

# Spannzangen
# COLLETS



**TYP A**



**TYP B**

| A | Art.Nr./PART NO. | B | Art.Nr./PART NO. | Spannzangen Durchmesser COLLET DIAMETER |
|---|---|---|---|---|
| | 2172 | | - | 1.0 mm |
| | 2182 | | - | 1.1 mm |
| | 2192 | | - | 1.2 mm |
| | 2202 | | - | 1.3 mm |
| | 2212 | | - | 1.4 mm |
| | 2222 | | - | 1.5 mm |
| | 2232 | | 18922 | 1.6 mm (1/16”) |
| | 2242 | | - | 1.7 mm |
| | 2252 | | 18932 | 1.8 mm |
| | 2262 | | - | 1.9 mm |
| | 2272 | | 18942 | 2.0 mm |
| | 2282 | | - | 2.1 mm |
| | 2292 | | 18952 | 2.2 mm |
| | 2302 | | - | 2.3 mm |
| | 2312 | | 18962 | 2.4 mm (3/32") |
| | 2322 | | - | 2.5 mm |
| | 2332 | | 18972 | 2.6 mm |
| | 2342 | | - | 2.7 mm |
| | 2352 | | 18982 | 2.8 mm |
| | 2362 | | - | 2.9 mm |
| | 2372 | | 18992 | 3.0 mm |
| | 2382 | | - | 3.1 mm |
| | 2392 | | 19002 | 3.2 mm (1/8") |
| | 2402 | | - | 3.3 mm |
| | 2412 | | 19022 | 3.4 mm |
| | 2422 | | - | 3.5 mm |
| | 2432 | | 19032 | 3.6 mm |
| | 2442 | | - | 3.7 mm |
| | 2452 | | 19042 | 3.8 mm |
| | 2462 | | - | 3.9 mm |
| | 2472 | | 19052 | 4.0 mm (5/32“) |
| | 2482 | | - | 4.1 mm |
| | 2492 | | 19062 | 4.2 mm |
| | 2502 | | - | 4.3 mm |
| | 2512 | | 19072 | 4.4 mm |
| | 2522 | | - | 4.5 mm |
| | 2532 | | 19082 | 4.6 mm |
| | 2542 | | - | 4.7 mm |
| | 2552 | | 19092 | 4.8 mm (3/16") |
| | 2562 | | - | 4.9 mm |
| | 2572 | | 19102 | 5.0 mm |
| | - | | 19122 | 5.2 mm |
| | - | | 19132 | 5.4 mm |
| | - | | - | 5.5 mm |
| | - | | 19142 | 5.6 mm |
| | - | | 19152 | 5.8 mm |
| | - | | 19162 | 6.0 mm |
| | - | | 19172 | 6.2 mm |
| | - | | 19182 | 6.4 mm |

# OFFSET ANGLE DRILL

## AT331

The AT331 Series Offset Angle Drills are designed to reach inaccessable areas: Equipped with anti-friction ball bearings for smooth, trouble-free operation at speeds up to 10,000 rpm without overheating. Standard with 1/4'' shank, and either 1/4-28 or 10-32 threaded spindle.

**NOTE:** When ordering, specify: Basic Part Number (AT331) and the spindle thread required.

**ORDER BY BASIC PART NUMBER**

| BASIC PART NO. | SPINDLE THREADS |
|---|---|
| AT331A | 10-32 |
| AT331B | 1/4-28 |

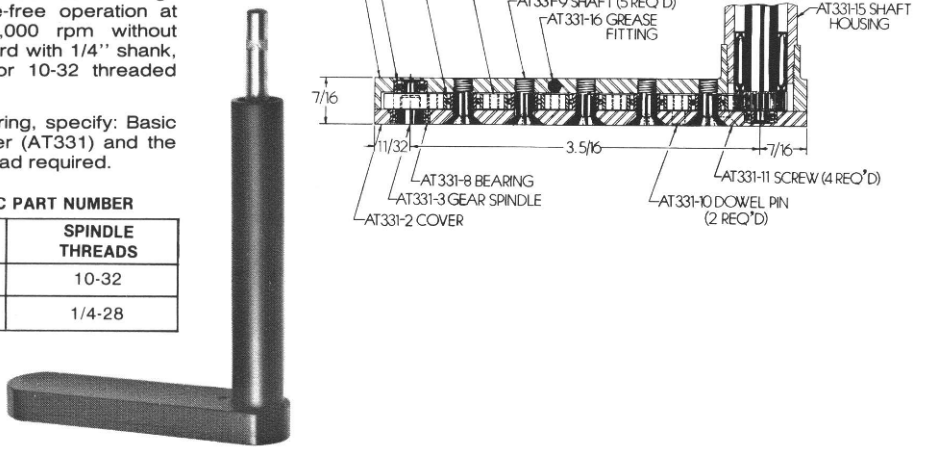




# OFFSET ANGLE DRILL

## AT332

The AT332 Series Offset Angle Drills are designed to reach inaccessable areas: Equipped with anti-friction ball bearings for smooth, trouble-free operation at speeds up to 10,000 rpm without overheating. Standard with 1/4'' shank, and either 1/4-28 or 10-32 threaded spindle.

**NOTE:** When ordering, specify: Part Number (AT332) and the spindle thread required.

**ORDER BY BASIC PART NUMBER**

| BASIC PART NO. | SPINDLE THREADS |
|---|---|
| AT332A | 10-32 |
| AT332B | 1/4-28 |

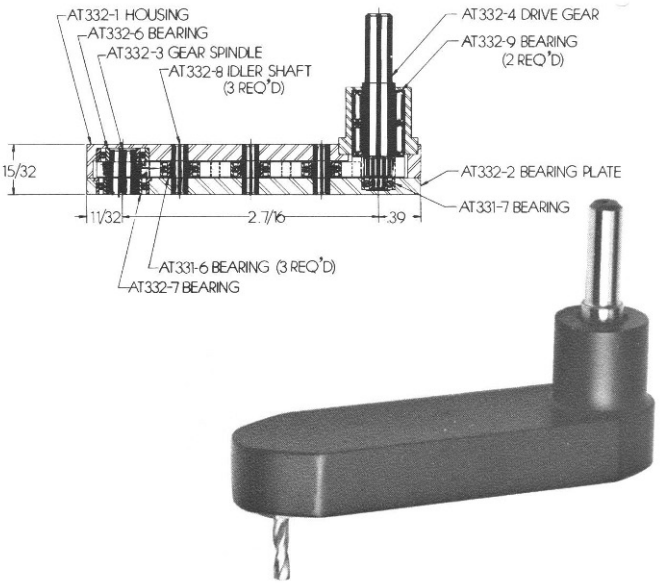




Drills offset for those places inaccessible for ordinary drills. Housings encase heat treated gears, with shafts hardened and precision ground to take the toughest task with ease.

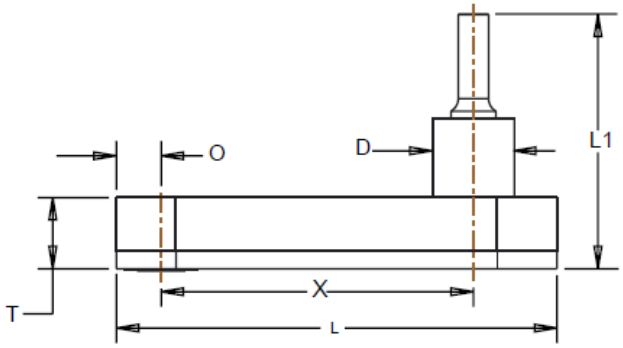


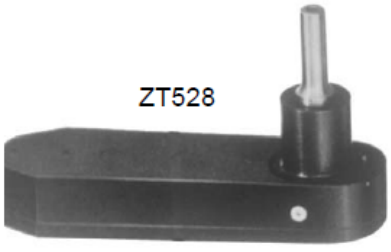


| MODEL | SPINDLE THREAD | SPINDLE OFFSET O | DRILL OFFSET X | OVERALL LENGTH L | LENGTH SHORT END L1 | BODY THICKNESS T | MOUNT DIAMETER D | MAX.REC. CAP. |
|---|---|---|---|---|---|---|---|---|
| ZT528-B | 5/16"-24 | 3/8" | 2-5/8" | 3-11/16" | 2-1/8" | 5/8" | 11/16" | 5/16" |
| ZT528-C | 1/4"-28 | | | | | | | |

**Offset drills for those "hard to get at" areas. Heat treated gears, Hardened and precision ground shafts, make this tool acceptable for the toughest jobs.**

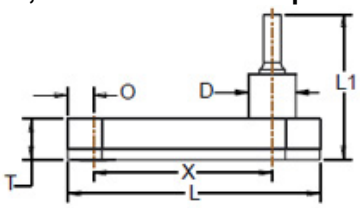




ZT535



ZT622
REVERSE SPINDLE TYPE

ZT721



ZT733

| Model | Spindle Thread | Spindle Offset O | Drill Offset X | Overall Length L | Length Short End L1 | Body Thick T | Mount Dia. D | Max.Rec. Cap. |
|---|---|---|---|---|---|---|---|---|
| ZT535-C | 1/4-28“ | 5/16“ | 3-13/16“ | 4-35/64“ | 1-61/64“ | 17/32“ | 11/16“ | 1/4" |
| ZT535-D | #10-32 | | | | | | | |
| ZT535-G | #5-40 | | | | | | | |
| ZT622-C | 1/4-28“ | 5/16“ | 3-1/8“ | 3-7/8“ | 1-61/64“ | 17/32“ | 11/16“ | 1/4" |
| ZT622-D | #10-32 | | | | | | | |
| ZT622-G | #5-40 | | | | | | | |
| ZT721-C | 1/4-28“ | 5/16“ | 2-29/64“ | 3-13/64“ | 1-15/16“ | 1/2“ | 11/16“ | 1/4" |
| ZT721-D | #10-32 | | | | | | | |
| ZT721-G | #5-40 | | | | | | | |
| ZT733-C | 1/4-28“ | 5/16“ | 2-15/32“ | 3-7/32“ | 1-13/16“ | 3/8“ | 11/16“ | 3/16“ |
| ZT733-D | #10-32 | | | | | | | |
| ZT733-G | #5-40 | | | | | | | |

**The ZT561/ZT562/ZT563 series flat offset angle drills.**
**Extra thin drills which allow access into tight areas. All steel housings, heat treated gears, hardened and precision ground shafts tackle the toughest of tasks with ease.**

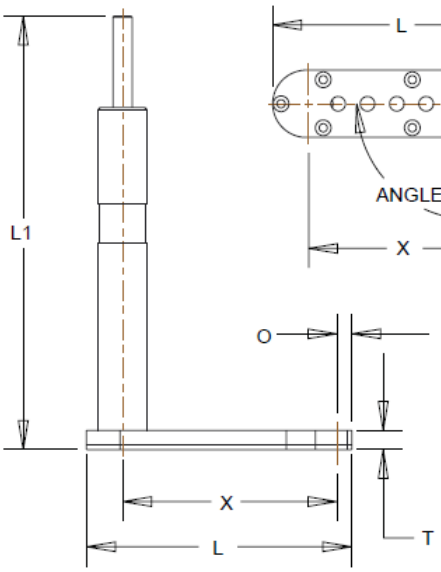





| Model | Spindle Thread | Spindle Offset O | Drill Offset X | Overall Length L | Length L1 | Body Thick. T | Body Width W | Angle | Drill Cap. |
|---|---|---|---|---|---|---|---|---|---|
| ZT562 | 10-32 | 9/32“ | 2.5/8“ | 3.7/16“ | 5.11/16“ | ¼“ | 7/8“ | 30° R.H. | 1/8“ |
| ZT563 | | | 2.5/8“ | 3.7/16“ | 5.11/16“ | | | 30° L.H. | |
| ZT561 | | | 3.3/64“ | 3.13/16 | 5.11/16“ | | | STRAIGHT | |
| ZT762 | | | 2.5/8“ | 3.7/16“ | 1.13/16“ | | | 30° R.H. | |
| ZT763 | | | 2.5/8“ | 3.7/16“ | 1.13/16“ | | | 30° L.H. | |
| ZT761 | | | 3.3/64“ | 3.13/16“ | 1.13/16“ | | | STRAIGHT | |
| ZT562C | 1/4“-28 | 9/32“ | 2.5/8“ | 3.7/16“ | 5.11/16“ | ¼“ | 7/8“ | 30° R.H. | 1/8“ |
| ZT563C | | | 2.5/8“ | 3.7/16“ | 5.11/16“ | | | 30° L.H. | |
| ZT561C | | | 3.3/64“ | 3.13/16 | 5.11/16“ | | | STRAIGHT | |
| ZT762C | | | 2.5/8“ | 3.7/16“ | 1.13/16“ | | | 30° R.H. | |
| ZT763C | | | 2.5/8“ | 3.7/16“ | 1.13/16“ | | | 30° L.H. | |

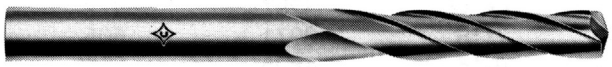

## Fräsbohrer, konisch, 3-Schneiden
TAPER ROUTER, 3-FLUTES
TAPER 1/4 INCH PER FOOT

| **Artikel-Nr.** PART NO. | **Schaftmaß** SHANK DIA. | **Durchmesser,klein** SMALL END | **Durchmesser,groß** LARGE END | **Schneidenlänge** FLUTE LENGTH | **Gesamtlänge** OVERALL LENGTH |
|---|---|---|---|---|---|
| **4244-1** | **.098** (2,49 mm) | **.081** (2,06 mm) | **.098** (2,49 mm) | **13/16"** (20,64 mm) | **2"** (50,8 mm) |
| **4244-2** | **.128** (3,25 mm) | **.110** (2,79 mm) | **.128** (3,25 mm) | **7/8"** (22,23 mm) | **2.1/4"** (57,2 mm) |
| **4244-3** | **.1875** (4,76 mm) | **.165** (4,19 mm) | **.1875** (4,76 mm) | **1.1/16"** (26,99 mm) | **2.1/2"** (63,5 mm) |
| **4244-4** | **.250** (6,35 mm) | **.224** (5,69 mm) | **.250** (6,35 mm) | **1.1/4"** (31,75 mm) | **2.3/4"** (69,9 mm) |



## Fräser mit 135° Bohrschneide für Fiberglas und ähnliche Kunststoffe
ROUTER WITH 135° DRILL POINT FOR
FIBRE GLASS & NON-METALLIC MATERIALS

| **Artikel-Nr.** PART NO. | **Schaftmaß** SHANK DIA. | **Kopf-Durchmesser** HEAD DIAMETER | **Schneidenlänge** FLUTE LENGTH | **Gesamtlänge** OVERALL LENGTH |
|---|---|---|---|---|
| **223-1/4"** | **1/4"** (6,35 mm) | **1/4"** (6,35 mm) | **3/4"** (19,05 mm) | **2.1/2"** (63,5 mm) |



## Vollhartmetall-Bohrer mit Spezialanschliff für KEVLAR und Kohlefaser Verbundwerkstoffe
SOLID CARBIDE DRILL WITH SPECIAL GRINDING
FOR KEVLAR AND GRAPHITE COMPOSITES

| **Artikel-Nr.** / PART NO. | **342-3/32"** | **342-1/8"** | **342-5/32"** | **342-3/16"** | **342-1/4"** |
|---|---|---|---|---|---|
| **Durchmesser** / DIAMETER | **3/32"** (2,38 mm) | **1/8"** (3,18 mm) | **5/32"** (3,97 mm) | **3/16"** (4,76 mm) | **1/4"** (6,35 mm) |
| **Gesamtlänge** / O/A LENGTH | **2"** (50,80 mm) | **2.1/4** (57,15 mm) | **2.1/2** (63,50 mm) | **2.3/4** (69,85 mm) | **3.1/4"** (82,55 mm) |
| **Schneidenlänge** / FLUTE LENGTH | **1"** (25,40 mm) | **1.1/4** (31,75 mm) | **1.3/8** (34,92 mm) | **1.5/8** (41,27 mm) | **2"** (50,80 mm) |

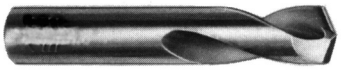

**Schneidenwinkel 135°**
SPLIT POINT 135°

## Kobalt-Nietausbohrer
**Gesamtlänge ca. 35 mm, Schneidenlänge ca. 14 mm**
COBALT-RIVET-KNOCKOUT-DRILL
OVERALL LENGTH APPR. 1.3/8", FLUTE LENGTH APPR. 9/16"

| **Artikel-Nr.** / PART NO. | **Durchmesser** / DIAMETER | | | **Artikel-Nr.** / PART NO. | **Durchmesser** / DIAMETER | |
|---|---|---|---|---|---|---|
| | **MM** | INCH | | | **MM** | INCH |
| **HAUS94-2,00 MM-M42** | **2,00** | .0787 | | **HAUS94-4,10 MM-M42** | **4,10** | .1614 |
| **HAUS94-2,40 MM-M42** | **2,40** | .0945 | | **HAUS94-4,20 MM-M42** | **4,20** | .1654 |
| **HAUS94-2,50 MM-M42** | **2,50** | .0984 | | **HAUS94-4,50 MM-M42** | **4,50** | .1772 |
| **HAUS94-3,00 MM-M42** | **3,00** | .1181 | | **HAUS94-4,80 MM-M42** | **4,80** | .1890 |
| **HAUS94-3,20 MM-M42** | **3,20** | .1260 | | **HAUS94-5,00 MM-M42** | **5,00** | .1969 |
| **HAUS94-3,26 MM-M42** | **3,26** | .1283 | | **HAUS94-5,50 MM-M42** | **5,50** | .2165 |
| **HAUS94-3,50 MM-M42** | **3,50** | .1378 | | **HAUS94-6,00 MM-M42** | **6,00** | .2362 |
| **HAUS94-4,00 MM-M42** | **4,00** | .1575 | | **HAUS94-6,40 MM-M42** | **6,40** | .2520 |
| **HAUS94-4,09 MM-M42** | **4,09** | .1610 | | | | |

**Andere Abmessungen auf Anfrage** / OTHER DIMENSIONS ON REQUEST

# DOUBLE MARGIN DRILLS - NAS 937

## Jobber Length, Cobalt, 135° Split Point



Designed for close tolerance drilling in titanium, stainless, heat treated material and aluminum alloys. When the drill point penetrates enough for the second margin to contact the wall of the hole, the point is stabilized and true cylindrical geometry is established. Smooth accurate holes are produced and reaming can often be eliminated.

| Part-No. | Drill Size | Drill Diameter | Flute Length | Overall Length | Part-No. | Drill Size | Drill Diameter | Flute Length | Overall Length |
|---|---|---|---|---|---|---|---|---|---|
| **13-DM63** | 3/32" | .0938 | 1-1/4" | 2-1/4" | **13-DM70A** | --- | .1870 | 2-5/16" | 3-1/2" |
| **13-DM40** | #40 | .0980 | 1-3/8" | 2-3/8" | **13-DM69** | 3/16" | .1875 | 2-5/16" | 3-1/2" |
| **13-DM64** | 7/64" | .1094 | 1-1/2" | 2-5/8" | **13-DM12** | #12 | .1890 | 2-5/16" | 3-1/2" |
| **13-DM65** | 1/8" | .1250 | 1-5/8" | 2-3/4" | **13-DM11** | #11 | .1910 | 2-5/16" | 3-1/2" |
| **13-DM30** | #30 | .1285 | 1-5/8" | 2-3/4" | **13-DM10** | #10 | .1935 | 2-7/16" | 3-5/8" |
| **13-DM66** | 9/64" | .1406 | 1-3/4" | 2-7/8" | **13-DM08** | #8 | .1990 | 2-7/16" | 3-5/8" |
| **13-DM27** | #27 | .1440 | 1-7/8" | 3" | **13-DM06** | #6 | .2040 | 2-1/2" | 3-3/4" |
| **13-DM67** | 5/32" | .1562 | 2" | 3-1/8" | **13-DM05** | #5 | .2055 | 2-1/2" | 3-3/4" |
| **13-DM21** | #21 | .1590 | 2-1/8" | 3-1/4" | **13-DM71** | 7/32" | .2188 | 2-1/2" | 3-3/4" |
| **13-DM20** | #20 | .1610 | 2-1/8" | 3-1/4" | **13-DM93** | D | .2460 | 2-3/4" | 4" |
| **13-DM19** | #19 | .1660 | 2-1/8" | 3-1/4" | **13-DM73** | 1/4" | .2500 | 2-3/4" | 4" |
| **13-DM68** | 11/64" | .1719 | 2-1/8" | 3-1/4" | **13-DM95** | F | .2570 | 2-7/8" | 4-1/8" |
| **13-DM16** | #16 | .1770 | 2-3/16" | 3-3/8" | **13-DM96** | G | .2610 | 2-7/8" | 4-1/8" |
| **13-DM15** | #15 | .1800 | 2-3/16" | 3-3/8" | **13-DM77** | 5/16" | .3125 | 3-3/16" | 4-1/2" |
| **13-DM13** | #13 | .1850 | 2-5/16" | 3-1/2" | **13-DM81** | 3/8" | .3750 | 3-5/8" | 5" |

# PILOTED DOUBLE MARGIN DRILLS

## Jobber Length, Cobalt, 135° Split Point



Designed for close tolerance drilling in titanium, stainless, heat treated material and aluminum alloys. When the drill point penetrates enough for the second margin to contact the wall of the hole, the point is stabilized and true cylindrical geometry is established. Smooth accurate holes are produced and reaming can often be eliminated.

| Part-No. | Size | Drill Diameter | Pilot Diameter | Flute Length | Overall Length | Pilot Length |
|---|---|---|---|---|---|---|
| **13-100** | 30 x 40 | .1285 | .0980 | 1-5/8" | 2-3/4" | 1/4" |
| **13-106** | 27 x 40 | .1440 | .0980 | 1-7/8" | 3" | 1/4" |
| **13-114** | 21 x 40 | .1590 | .0980 | 2-1/8" | 3-1/4" | 1/4" |
| **13-107** | 21 x 30 | .1590 | .1285 | 2-1/8" | 3-1/4" | 1/4" |
| **13-117** | 20 x 40 | .1610 | .0980 | 2-1/8" | 3-1/4" | 1/4" |
| **13-115** | 20 x 30 | .1610 | .1285 | 2-1/8" | 3-1/4" | 1/4" |
| **13-118** | 16 x 40 | .1770 | .0980 | 2-3/16" | 3-3/8" | 1/4" |
| **13-119** | 16 x 30 | .1770 | .1285 | 2-3/16" | 3-3/8" | 1/4" |
| **13-121** | 13 x 40 | .1850 | .0980 | 2-5/16" | 3-1/2" | 1/4" |
| **13-128** | 13 x 30 | .1850 | .1285 | 2-5/16" | 3-1/2" | 1/4" |
| **13-135** | 13 x 21 | .1850 | .1590 | 2-5/16" | 3-1/2" | 1/4" |
| **13-142** | 12 x 40 | .1890 | .0980 | 2-5/16" | 3-1/2" | 1/4" |
| **13-149** | 12 x 30 | .1890 | .1285 | 2-5/16" | 3-1/2" | 1/4" |
| **13-156** | 12 x 21 | .1890 | .1590 | 2-5/16" | 3-1/2" | 1/4" |
| **13-170** | 11 x 30 | .1910 | .1285 | 2-5/16" | 3-1/2" | 1/4" |
| **13-163** | 11 x 21 | .1910 | .1590 | 2-5/16" | 3-1/2" | 1/4" |
| **13-184** | 10 x 40 | .1935 | .0980 | 2-7/16" | 3-5/8" | 1/4" |
| **13-177** | 10 x 30 | .1935 | .1285 | 2-7/16" | 3-5/8" | 1/4" |
| **13-191** | 10 x 21 | .1935 | .1590 | 2-7/16" | 3-5/8" | 1/4" |
| **13-205** | D x 13 | .2460 | .1850 | 2-3/4" | 4" | 5/16" |
| **13-198** | D x 3/16 | .2460 | .1875 | 2-3/4" | 4" | 5/16" |
| **13-230** | 1/4 x 30 | .2500 | .1285 | 2-3/4" | 4" | 5/16" |
| **13-327** | 1/4 x 21 | .2500 | .1590 | 2-3/4" | 4" | 5/16" |
| **13-223** | 1/4 x 11 | .2500 | .1910 | 2-3/4" | 4" | 5/16" |
| **13-216** | 1/4 x 10 | .2500 | .1935 | 2-3/4" | 4" | 5/16" |
| **13-244** | 5/16 x 1/4 | .3125 | .2500 | 3-3/16" | 4-1/2" | 5/16" |
| **13-250** | 3/8 x 1/4 | .3750 | .2500 | 3-5/8" | 5" | 3/8" |
| **13-255** | 3/8 x 5/16 | .3750 | .3125 | 3-5/8" | 5" | 3/8" |

Andere Abmessungen auf Anfrage / **OTHER DIMENSIONS ON REQUEST**

# HSS - Maschinenreibahlen mit Führung
## HSS - PILOTED CHUCKING REAMERS

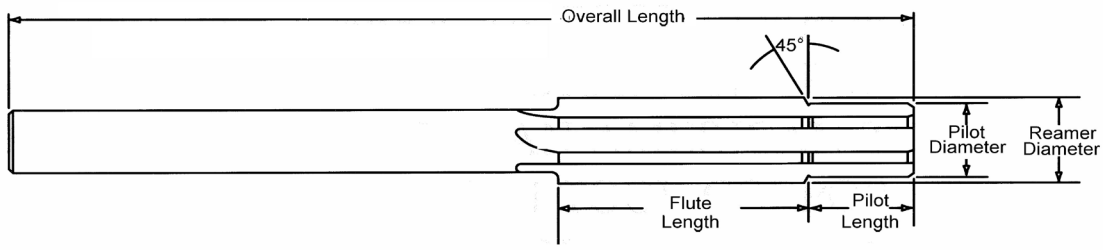


| Part Number | Reamer Diameter / INCH | Pilot Diameter / INCH | Flutes | | Pilot Length | Overall Length |
|---|---|---|---|---|---|---|
| | | | No. | Length | | |
| **31-219** | .1610 | .1250 | 6 | 13/16" | 5/16" | 4-1/2" |
| **33-737** | .1850 | .1600 | 6 | 13/16" | 5/16" | 4-1/2" |
| **31-602** | .1860 | .1540 | 6 | 13/16" | 5/16" | 4-1/2" |
| **33-090** | .1870 | .1600 | 6 | 13/16" | 5/16" | 4-1/2" |
| **44-100** | .1870 | .1740 | 6 | 13/16" | 5/16" | 4-1/2" |
| **44-410** | .1875 | .1600 | 6 | 13/16" | 5/16" | 4-1/2" |
| **99-200** | .1985 | .1845 | 6 | 15/16" | 5/16" | 5" |
| **31-604** | .1985 | .1850 | 6 | 15/16" | 5/16" | 5" |
| **33-738** | .1985 | .1945 | 6 | 15/16" | 5/16" | 5" |
| **44-150** | .2000 | .1870 | 6 | 15/16" | 5/16" | 5" |
| **44-160** | .2031 | .1875 | 6 | 15/16" | 5/16" | 5" |
| **33-739** | .2130 | .1950 | 6 | 15/16" | 5/16" | 5" |
| **99-300** | .2130 | .1985 | 6 | 15/16" | 5/16" | 5" |
| **31-207** | .2140 | .1970 | 6 | 15/16" | 5/16" | 5" |
| **44-200** | .2158 | .2000 | 6 | 15/16" | 5/16" | 5" |
| **33-290** | .2160 | .1980 | 6 | 15/16" | 5/16" | 5" |
| **44-210** | .2188 | .2031 | 6 | 15/16" | 5/16" | 5" |
| **44-250** | .2314 | .2158 | 6 | 1-1/8" | 3/8" | 6" |
| **31-605** | .2330 | .2140 | 6 | 1-1/8" | 3/8" | 6" |
| **33-740** | .2340 | .2130 | 6 | 1-3/16" | 5/16" | 6" |
| **44-260** | .2344 | .2180 | 6 | 1-1/8" | 3/8" | 6" |
| **99-500** | .2435 | .2340 | 6 | 1-1/8" | 3/8" | 6" |
| **33-741** | .2455 | .2340 | 6 | 1-3/16" | 5/16" | 6" |
| **31-222** | .2460 | .2330 | 6 | 1-1/8" | 3/8" | 6" |
| **44-300** | .2470 | .2314 | 6 | 1-1/8" | 3/8" | 6" |
| **44-310** | .2500 | .2344 | 6 | 1-1/8" | 3/8" | 6" |
| **33-742** | .2600 | .2460 | 6 | 1-1/8" | 3/8" | 6" |
| **33-340** | .2610 | .2310 | 6 | 1-1/8" | 3/8" | 6" |
| **31-600** | .2610 | .2450 | 6 | 1-1/8" | 3/8" | 6" |
| **31-221** | .2620 | .2470 | 6 | 1-1/8" | 3/8" | 6" |
| **44-350** | .2621 | .2470 | 6 | 1-1/8" | 3/8" | 6" |
| **44-360** | .2656 | .2500 | 6 | 1-1/8" | 3/8" | 6" |
| **33-743** | .2755 | .2600 | 6 | 1-1/8" | 3/8" | 6" |
| **30-378** | .2780 | .2620 | 6 | 1-1/8" | 3/8" | 6" |
| **44-400** | .2782 | .2621 | 6 | 1-1/8" | 3/8" | 6" |
| **30-368** | .2810 | .2670 | 6 | 1-1/8" | 3/8" | 6" |
| **44-320** | .2812 | .2656 | 6 | 1-1/8" | 3/8" | 6" |
| **99-701** | .2910 | .2755 | 6 | 1-1/8" | 3/8" | 6" |
| **31-601** | .2920 | .2770 | 6 | 1-1/8" | 3/8" | 6" |
| **44-450** | .2939 | .2782 | 6 | 1-1/8" | 3/8" | 6" |
| **44-460** | .2969 | .2812 | 6 | 1-1/8" | 3/8" | 6" |
| **99-702** | .3075 | .2910 | 6 | 1-1/8" | 3/8" | 6" |
| **44-500** | .3090 | .2939 | 6 | 1-1/8" | 3/8" | 6" |
| **31-216** | .3100 | .2920 | 6 | 1-3/16" | 5/16" | 6" |

**Andere Abmessungen auf Anfrage** / OTHER DIMENSIONS ON REQUEST

# HSS - Maschinenreibahlen mit Führung
## HSS - PILOTED CHUCKING REAMERS

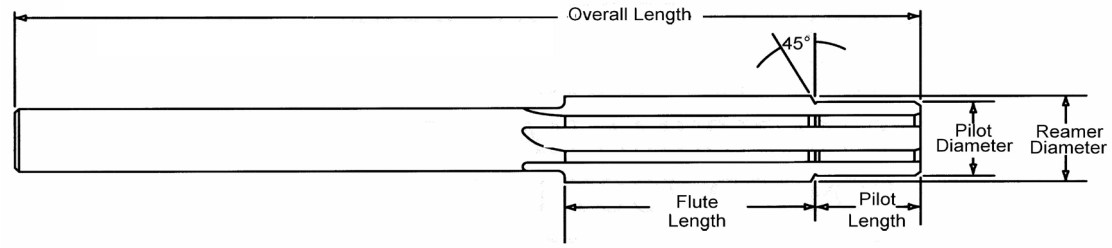


| Part Number | Reamer Diameter / INCH | Pilot Diameter / INCH | Flutes | | Pilot Length | Overall Length |
|---|---|---|---|---|---|---|
| | | | No. | Length | | |
| **44-510** | .3125 | .2969 | 6 | 1-1/8" | 3/8" | 6" |
| **99-703** | .3225 | .3075 | 6 | 1-1/8" | 3/8" | 6" |
| **31-217** | .3230 | .3100 | 6 | 1-1/8" | 3/8" | 6" |
| **44-550** | .3251 | .3090 | 6 | 1-1/8" | 3/8" | 6" |
| **44-560** | .3281 | .3125 | 6 | 1-1/8" | 3/8" | 6" |
| **99-704** | .3380 | .3225 | 6 | 1-1/8" | 3/8" | 6" |
| **30-394** | .3390 | .3230 | 6 | 1-1/8" | 3/8" | 6" |
| **31-218** | .3390 | .3350 | 6 | 1-3/16" | 5/16" | 6" |
| **44-600** | .3407 | .3251 | 6 | 1-1/8" | 3/8" | 6" |
| **44-610** | .3438 | .3281 | 6 | 1" | 1/2" | 6" |
| **99-705** | .3535 | .3380 | 6 | 1-1/4" | 1/2" | 7" |
| **44-620** | .3594 | .3438 | 6 | 1-1/4" | 1/2" | 7" |
| **99-706** | .3700 | .3535 | 6 | 1-1/4" | 1/2" | 7" |
| **30-409** | .3710 | .3550 | 6 | 1-1/4" | 1/2" | 7" |
| **33-630** | .3750 | .3494 | 6 | 1-1/4" | 1/2" | 7" |
| **44-630** | .3750 | .3594 | 6 | 1-1/4" | 1/2" | 7" |
| **99-707** | .3850 | .3700 | 6 | 1-1/4" | 1/2" | 7" |
| **34-116** | .3860 | .3720 | 6 | 1-1/4" | 1/2" | 7" |
| **44-640** | .3906 | .3750 | 6 | 1-1/4" | 1/2" | 7" |
| **99-708** | .4005 | .3850 | 6 | 1-1/4" | 1/2" | 7" |
| **31-603** | .4010 | .3860 | 6 | 1-1/4" | 1/2" | 7" |
| **44-650** | .4062 | .3906 | 6 | 1-1/4" | 1/2" | 7" |
| **99-709** | .4160 | .4005 | 6 | 1-1/4" | 1/2" | 7" |
| **44-660** | .4219 | .4062 | 6 | 1-1/4" | 1/2" | 7" |
| **99-710** | .4325 | .4160 | 6 | 1-1/4" | 1/2" | 7" |
| **99-719** | .4375 | .4219 | 6 | 1-1/4" | 1/2" | 7" |
| **99-711** | .4485 | .4325 | 6 | 1-1/4" | 1/2" | 7" |
| **99-720** | .4531 | .4375 | 6 | 1-1/4" | 1/2" | 7" |
| **99-712** | .4640 | .4405 | 6 | 1-1/4" | 1/2" | 7" |
| **99-721** | .4688 | .4531 | 6 | 1-1/4" | 1/2" | 7" |
| **99-713** | .4795 | .4640 | 6 | 1-1/2" | 1/2" | 8" |
| **99-722** | .4844 | .4688 | 6 | 1-1/2" | 1/2" | 8" |
| **99-714** | .4950 | .4795 | 6 | 1-1/2" | 1/2" | 8" |
| **99-723** | .5000 | .4844 | 6 | 1-1/2" | 1/2" | 8" |
| **99-715** | .5110 | .4950 | 6 | 1-1/2" | 1/2" | 8" |
| **99-724** | .5156 | .5000 | 6 | 1-1/2" | 1/2" | 8" |
| **99-716** | .5265 | .5110 | 6 | 1-1/2" | 1/2" | 8" |
| **99-725** | .5312 | .5156 | 6 | 1-1/2" | 1/2" | 8" |
| **99-726** | .5469 | .5312 | 8 | 1-1/2" | 1/2" | 8" |
| **99-727** | .5625 | .5469 | 8 | 1-1/2" | 1/2" | 8" |
| **99-728** | .5781 | .5625 | 8 | 1-1/2" | 1/2" | 8" |
| **99-729** | .5938 | .5781 | 8 | 1-1/2" | 1/2" | 8" |
| **99-730** | .6094 | .5938 | 8 | 1-1/2" | 1/2" | 9" |
| **99-731** | .6250 | .6094 | 8 | 1-3/4" | 1/2" | 9" |

**Andere Abmessungen auf Anfrage** / OTHER DIMENSIONS ON REQUEST

# COBALT AIRCRAFT DRILLS

**- WIRE GAUGE NUMBER SIZES -**

**NAS907, Type J Cobalt Jobber Length Drill Cobalt HSS Surface Treated, 135° Split Point**



| PART NUMBER | DIAMETER NUMBER | DECIMAL EQUIVALENT INCHES | MILLIMETER EQUIVALENT | FLUTE LENGTH INCHES | OVERALL LENGTH INCHES |
|---|---|---|---|---|---|
| **01-001** | **1** | .2280 | 5.79 mm | 2-5/8 | 3-7/8 |
| **01-002** | **2** | .2210 | 5.61 mm | 2-5/8 | 3-7/8 |
| **01-003** | **3** | .2130 | 5.41 mm | 2-1/2 | 3-3/4 |
| **01-004** | **4** | .2090 | 5.31 mm | 2-1/2 | 3-3/4 |
| **01-005** | **5** | .2055 | 5.22 mm | 2-1/2 | 3-3/4 |
| **01-006** | **6** | .2040 | 5.18 mm | 2-1/2 | 3-3/4 |
| **01-007** | **7** | .2010 | 5.11 mm | 2-7/16 | 3-5/8 |
| **01-008** | **8** | .1990 | 5.06 mm | 2-7/16 | 3-5/8 |
| **01-009** | **9** | .1960 | 4.98 mm | 2-7/16 | 3-5/8 |
| **01-010** | **10** | .1935 | 4.92 mm | 2-7/16 | 3-5/8 |
| **01-011** | **11** | .1910 | 4.85 mm | 2-5/16 | 3-1/2 |
| **01-012** | **12** | .1890 | 4.80 mm | 2-5/16 | 3-1/2 |
| **01-013** | **13** | .1850 | 4.70 mm | 2-5/16 | 3-1/2 |
| **01-014** | **14** | .1820 | 4.62 mm | 2-3/16 | 3-3/8 |
| **01-015** | **15** | .1800 | 4.57 mm | 2-3/16 | 3-3/8 |
| **01-016** | **16** | .1770 | 4.50 mm | 2-3/16 | 3-3/8 |
| **01-017** | **17** | .1730 | 4.39 mm | 2-3/16 | 3-3/8 |
| **01-018** | **18** | .1695 | 4.30 mm | 2-1/8 | 3-1/4 |
| **01-019** | **19** | .1660 | 4.22 mm | 2-1/8 | 3-1/4 |
| **01-020** | **20** | .1610 | 4.09 mm | 2-1/8 | 3-1/4 |
| **01-021** | **21** | .1590 | 4.04 mm | 2-1/8 | 3-1/4 |
| **01-022** | **22** | .1570 | 3.99 mm | 2 | 3-1/8 |
| **01-023** | **23** | .1540 | 3.91 mm | 2 | 3-1/8 |
| **01-024** | **24** | .1520 | 3.86 mm | 2 | 3-1/8 |
| **01-025** | **25** | .1495 | 3.80 mm | 1-7/8 | 3 |
| **01-026** | **26** | .1470 | 3.73 mm | 1-7/8 | 3 |
| **01-027** | **27** | .1440 | 3.66 mm | 1-7/8 | 3 |
| **01-028** | **28** | .1405 | 3.57 mm | 1-3/4 | 2-7/8 |
| **01-029** | **29** | .1360 | 3.45 mm | 1-3/4 | 2-7/8 |
| **01-030** | **30** | .1285 | 3.27 mm | 1-5/8 | 2-3/4 |
| **01-031** | **31** | .1200 | 3.05 mm | 1-5/8 | 2-3/4 |
| **01-032** | **32** | .1160 | 2.95 mm | 1-5/8 | 2-3/4 |
| **01-033** | **33** | .1130 | 2.87 mm | 1-1/2 | 2-5/8 |
| **01-034** | **34** | .1110 | 2.82 mm | 1-1/2 | 2-5/8 |
| **01-035** | **35** | .1100 | 2.79 mm | 1-1/2 | 2-5/8 |
| **01-036** | **36** | .1065 | 2.71 mm | 1-7/16 | 2-1/2 |
| **01-037** | **37** | .1040 | 2.64 mm | 1-7/16 | 2-1/2 |
| **01-038** | **38** | .1015 | 2.58 mm | 1-7/16 | 2-1/2 |
| **01-039** | **39** | .0995 | 2.53 mm | 1-3/8 | 2-3/8 |
| **01-040** | **40** | .0980 | 2.49 mm | 1-3/8 | 2-3/8 |

# COBALT AIRCRAFT DRILLS

## - WIRE GAUGE NUMBER SIZES -

**NAS907, Type J Cobalt Jobber Length Drill Cobalt HSS Surface Treated, 135° Split Point**



| PART NUMBER | DIAMETER NUMBER | DECIMAL EQUIVALENT INCHES | MILLIMETER EQUIVALENT | FLUTE LENGTH INCHES | OVERALL LENGTH INCHES |
|---|---|---|---|---|---|
| **01-041** | **41** | .0960 | 2.44 mm | 1-3/8 | 2-3/8 |
| **01-042** | **42** | .0935 | 2.37 mm | 1-1/4 | 2-1/4 |
| **01-043** | **43** | .0890 | 2.26 mm | 1-1/4 | 2-1/4 |
| **01-044** | **44** | .0860 | 2.18 mm | 1-1/8 | 2-1/8 |
| **01-045** | **45** | .0820 | 2.08 mm | 1-1/8 | 2-1/8 |
| **01-046** | **46** | .0810 | 2.06 mm | 1-1/8 | 2-1/8 |
| **01-047** | **47** | .0785 | 1.99 mm | 1 | 2 |
| **01-048** | **48** | .0760 | 1.93 mm | 1 | 2 |
| **01-049** | **49** | .0730 | 1.85 mm | 1 | 2 |
| **01-050** | **50** | .0700 | 1.78 mm | 1 | 2 |
| **01-051** | **51** | .0670 | 1.70 mm | 1 | 2 |
| **01-052** | **52** | .0635 | 1.61 mm | 7/8 | 1-7/8 |
| **01-053** | **53** | .0595 | 1.51 mm | 7/8 | 1-7/8 |
| **01-054** | **54** | .0550 | 1.40 mm | 7/8 | 1-7/8 |
| **01-055** | **55** | .0520 | 1.32 mm | 7/8 | 1-7/8 |
| **01-056** | **56** | .0465 | 1.18 mm | 3/4 | 1-3/4 |
| **01-057** | **57** | .0430 | 1.09 mm | 3/4 | 1-3/4 |
| **01-058** | **58** | .0420 | 1.07 mm | 11/16 | 1-5/8 |
| **01-059** | **59** | .0410 | 1.04 mm | 11/16 | 1-5/8 |
| **01-060** | **60** | .0400 | 1.02 mm | 11/16 | 1-5/8 |
| **01-061** | **61 *** | .0390 | 0.99 mm | 11/16 | 1-5/8 |
| **01-062** | **62 *** | .0380 | 0.97 mm | 5/8 | 1-1/2 |
| **01-063** | **63 *** | .0370 | 0.94 mm | 5/8 | 1-1/2 |
| **01-064** | **64 *** | .0360 | 0.91 mm | 5/8 | 1-1/2 |
| **01-065** | **65 *** | .0350 | 0.89 mm | 5/8 | 1-1/2 |
| **01-066** | **66 *** | .0330 | 0.84 mm | 1/2 | 1-3/8 |
| **01-067** | **67 *** | .0320 | 0.81 mm | 1/2 | 1-3/8 |
| **01-068** | **68 *** | .0310 | 0.79 mm | 1/2 | 1-3/8 |
| **01-069** | **69 *** | .0292 | 0.74 mm | 1/2 | 1-3/8 |
| **01-070** | **70 *** | .0280 | 0.71 mm | 3/8 | 1-1/4 |
| **01-071** | **71 *** | .0260 | 0.66 mm | 3/8 | 1-1/4 |
| **01-072** | **72 *** | .0250 | 0.64 mm | 5/16 | 1-1/8 |
| **01-073** | **73 *** | .0240 | 0.61 mm | 5/16 | 1-1/8 |
| **01-074** | **74 *** | .0225 | 0.57 mm | 1/4 | 1 |
| **01-075** | **75 *** | .0210 | 0.53 mm | 1/4 | 1 |
| **01-076** | **76 *** | .0200 | 0.51 mm | 3/16 | 7/8 |
| **01-077** | **77 *** | .0180 | 0.46 mm | 3/16 | 7/8 |
| **01-078** | **78 *** | .0160 | 0.41 mm | 3/16 | 7/8 |
| **01-079** | **79 *** | .0145 | 0.37 mm | 1/8 | 3/4 |
| **01-080** | **80 *** | .0135 | 0.34 mm | 1/8 | 3/4 |

*** NON SPLIT POINT**

# COBALT AIRCRAFT DRILLS

**- FRACTIONAL SIZES -**

**NAS907, Type J Cobalt Jobber Length Drill Cobalt HSS Surface Treated, 135° Split Point**



| PART NUMBER | DIAMETER INCHES | DECIMAL EQUIVALENT INCHES | MILLIMETER EQUIVALENT | FLUTE LENGTH INCHES | OVERALL LENGTH INCHES |
|---|---|---|---|---|---|
| **02-060** | **1/64 *** | .0156 | 0.40 mm | 3/16 | 3/4 |
| **02-058** | **1/32 *** | .0312 | 0.79 mm | 1/2 | 1-3/8 |
| **02-059** | **3/64 *** | .0469 | 1.19 mm | 3/4 | 1-3/4 |
| **02-061** | **1/16** | .0625 | 1.59 mm | 7/8 | 1-7/8 |
| **02-062** | **5/64** | .0781 | 1.98 mm | 1 | 2 |
| **02-063** | **3/32** | .0938 | 2.38 mm | 1-1/4 | 2-1/4 |
| **02-064** | **7/64** | .1094 | 2.78 mm | 1-1/2 | 2-5/8 |
| **02-065** | **1/8** | .1250 | 3.18 mm | 1-5/8 | 2-3/4 |
| **02-066** | **9/64** | .1406 | 3.57 mm | 1-3/4 | 2-7/8 |
| **02-067** | **5/32** | .1562 | 3.97 mm | 2 | 3-1/8 |
| **02-068** | **11/64** | .1719 | 4.37 mm | 2-1/8 | 3-1/4 |
| **02-069** | **3/16** | .1875 | 4.76 mm | 2-5/16 | 3-1/2 |
| **02-070** | **13/64** | .2031 | 5.16 mm | 2-7/16 | 3-5/8 |
| **02-071** | **7/32** | .2188 | 5.56 mm | 2-1/2 | 3-3/4 |
| **02-072** | **15/64** | .2344 | 5.95 mm | 2-5/8 | 3-7/8 |
| **02-073** | **1/4** | .2500 | 6.35 mm | 2-3/4 | 4 |
| **02-074** | **17/64** | .2656 | 6.75 mm | 2-7/8 | 4-1/8 |
| **02-075** | **9/32** | .2812 | 7.14 mm | 2-15/16 | 4-1/4 |
| **02-076** | **19/64** | .2969 | 7.54 mm | 3-1/16 | 4-3/8 |
| **02-077** | **5/16** | .3125 | 7.94 mm | 3-3/16 | 4-1/2 |
| **02-078** | **21/64** | .3281 | 8.33 mm | 3-5/16 | 4-5/8 |
| **02-079** | **11/32** | .3438 | 8.73 mm | 3-7/16 | 4-3/4 |
| **02-080** | **23/64** | .3594 | 9.13 mm | 3-1/2 | 4-7/8 |
| **02-081** | **3/8** | .3750 | 9.53 mm | 3-5/8 | 5 |
| **02-082** | **25/64** | .3906 | 9.92 mm | 3-3/4 | 5-1/8 |
| **02-083** | **13/32** | .4062 | 10.32 mm | 3-7/8 | 5-1/4 |
| **02-084** | **27/64** | .4219 | 10.72 mm | 3-15/16 | 5-3/8 |
| **02-085** | **7/16** | .4375 | 11.11 mm | 4-1/16 | 5-1/2 |
| **02-086** | **29/64** | .4531 | 11.51 mm | 4-3/16 | 5-5/8 |
| **02-087** | **15/32** | .4688 | 11.91 mm | 4-5/16 | 5-3/4 |
| **02-088** | **31/64** | .4844 | 12.30 mm | 4-3/8 | 5-7/8 |
| **02-089** | **1/2** | .5000 | 12.70 mm | 4-1/2 | 6 |

*** NON SPLIT POINT**

# COBALT AIRCRAFT DRILLS

## - LETTER SIZES -

**NAS907, Type J Cobalt Jobber Length Drill Cobalt HSS Surface Treated, 135° Split Point**



| PART NUMBER | DIAMETER SIZE | DECIMAL EQUIVALENT INCHES | MILLIMETER EQUIVALENT | FLUTE LENGTH INCHES | OVERALL LENGTH INCHES |
|---|---|---|---|---|---|
| **03-090** | **A** | .234 | 5.94 mm | 2-5/8 | 3-7/8 |
| **03-091** | **B** | .238 | 6.05 mm | 2-3/4 | 4 |
| **03-092** | **C** | .242 | 6.15 mm | 2-3/4 | 4 |
| **03-093** | **D** | .246 | 6.25 mm | 2-3/4 | 4 |
| **03-094** | **E** | .250 | 6.35 mm | 2-3/4 | 4 |
| **03-095** | **F** | .257 | 6.53 mm | 2-7/8 | 4-1/8 |
| **03-096** | **G** | .261 | 6.63 mm | 2-7/8 | 4-1/8 |
| **03-097** | **H** | .266 | 6.76 mm | 2-7/8 | 4-1/8 |
| **03-098** | **I** | .272 | 6.91 mm | 2-7/8 | 4-1/8 |
| **03-099** | **J** | .277 | 7.04 mm | 2-7/8 | 4-1/8 |
| **03-100** | **K** | .281 | 7.14 mm | 2-15/16 | 4-1/4 |
| **03-101** | **L** | .290 | 7.37 mm | 2-15/16 | 4-1/4 |
| **03-102** | **M** | .295 | 7.49 mm | 3-1/16 | 4-3/8 |
| **03-103** | **N** | .302 | 7.67 mm | 3-1/16 | 4-3/8 |
| **03-104** | **O** | .316 | 8.03 mm | 3-3/16 | 4-1/2 |
| **03-105** | **P** | .323 | 8.20 mm | 3-5/16 | 4-5/8 |
| **03-106** | **Q** | .332 | 8.43 mm | 3-7/16 | 4-3/4 |
| **03-107** | **R** | .339 | 8.61 mm | 3-7/16 | 4-3/4 |
| **03-108** | **S** | .348 | 8.84 mm | 3-1/2 | 4-7/8 |
| **03-109** | **T** | .358 | 9.09 mm | 3-1/2 | 4-7/8 |
| **03-110** | **U** | .368 | 9.35 mm | 3-5/8 | 5 |
| **03-111** | **V** | .377 | 9.58 mm | 3-5/8 | 5 |
| **03-112** | **W** | .386 | 9.80 mm | 3-3/4 | 5-1/8 |
| **03-113** | **X** | .395 | 10.03 mm | 3-3/4 | 5-1/8 |
| **03-114** | **Y** | .404 | 10.26 mm | 3-7/8 | 5-1/4 |
| **03-115** | **Z** | .413 | 10.49 mm | 3-7/8 | 5-1/4 |

# COBALT AIRCRAFT EXTENSION DRILLS

**- WIRE SIZES / 6” OVERALL LENGTH -**

NAS907, Type J Cobalt Extension Length Drill Cobalt HSS Surface Treated, 135° Split Point



| PART NUMBER | DIAMETER NUMBER | DECIMAL EQUIVALENT INCHES | MILLIMETER EQUIVALENT | FLUTE LENGTH INCHES | OVERALL LENGTH INCHES |
|---|---|---|---|---|---|
| **05-200** | **1** | .2280 | 5.79 mm | 2-5/8 | 6” |
| **05-201** | **2** | .2210 | 5.61 mm | 2-5/8 | 6” |
| **05-202** | **3** | .2130 | 5.41 mm | 2-1/2 | 6” |
| **05-203** | **4** | .2090 | 5.31 mm | 2-1/2 | 6” |
| **05-204** | **5** | .2055 | 5.22 mm | 2-1/2 | 6” |
| **05-205** | **6** | .2040 | 5.18 mm | 2-1/2 | 6” |
| **05-206** | **7** | .2010 | 5.11 mm | 2-7/16 | 6” |
| **05-207** | **8** | .1990 | 5.05 mm | 2-7/16 | 6” |
| **05-208** | **9** | .1960 | 4.98 mm | 2-7/16 | 6” |
| **05-209** | **10** | .1935 | 4.91 mm | 2-7/16 | 6” |
| **05-210** | **11** | .1910 | 4.85 mm | 2-5/16 | 6” |
| **05-211** | **12** | .1890 | 4.80 mm | 2-5/16 | 6” |
| **05-212** | **13** | .1850 | 4.70 mm | 2-5/16 | 6” |
| **05-213** | **14** | .1820 | 4.62 mm | 2-3/16 | 6” |
| **05-214** | **15** | .1800 | 4.57 mm | 2-3/16 | 6” |
| **05-215** | **16** | .1770 | 4.50 mm | 2-3/16 | 6” |
| **05-216** | **17** | .1730 | 4.39 mm | 2-3/16 | 6” |
| **05-217** | **18** | .1695 | 4.31 mm | 2-1/8 | 6” |
| **05-218** | **19** | .1660 | 4.22 mm | 2-1/8 | 6” |
| **05-219** | **20** | .1610 | 4.09 mm | 2-1/8 | 6” |
| **05-220** | **21** | .1590 | 4.04 mm | 2-1/8 | 6” |
| **05-221** | **22** | .1570 | 3.99 mm | 2 | 6” |
| **05-222** | **23** | .1540 | 3.91 mm | 2 | 6” |
| **05-223** | **24** | .1520 | 3.86 mm | 2 | 6” |
| **05-224** | **25** | .1495 | 3.80 mm | 1-7/8 | 6” |
| **05-225** | **26** | .1470 | 3.73 mm | 1-7/8 | 6” |
| **05-226** | **27** | .1440 | 3.66 mm | 1-7/8 | 6” |
| **05-227** | **28** | .1405 | 3.57 mm | 1-3/4 | 6” |
| **05-228** | **29** | .1360 | 3.45 mm | 1-3/4 | 6” |
| **05-229** | **30** | .1285 | 3.26 mm | 1-5/8 | 6” |
| **05-230** | **31** | .1200 | 3.05 mm | 1-5/8 | 6” |
| **05-231** | **32** | .1160 | 2.95 mm | 1-5/8 | 6” |
| **05-232** | **33** | .1130 | 2.87 mm | 1-1/2 | 6” |
| **05-233** | **34** | .1110 | 2.82 mm | 1-1/2 | 6” |
| **05-234** | **35** | .1100 | 2.79 mm | 1-1/2 | 6” |
| **05-235** | **36** | .1065 | 2.71 mm | 1-7/16 | 6” |
| **05-236** | **37** | .1040 | 2.64 mm | 1-7/16 | 6” |
| **05-239** | **40** | .0980 | 2.49 mm | 1-3/8 | 6” |
| **05-240** | **41** | .0960 | 2.44 mm | 1-3/8 | 6” |
| **05-249** | **50** | .0700 | 1.78 mm | 1 | 6” |

## COBALT AIRCRAFT EXTENSION DRILLS

**- FRACTIONAL SIZES / 6” OVERALL LENGTH -**

NAS907, Type J Cobalt Extension Length Drill Cobalt HSS
Surface Treated, 135° Split Point



| PART NUMBER | DIAMETER INCHES | DECIMAL EQUIVALENT INCHES | MILLIMETER EQUIVALENT | FLUTE LENGTH INCHES | OVERALL LENGTH INCHES |
|---|---|---|---|---|---|
| **04-100** | **1/16** | .0625 | 1.59 mm | 7/8 | 6” |
| **04-101** | **5/64** | .0781 | 1.98 mm | 1 | 6” |
| **04-102** | **3/32** | .0938 | 2.38 mm | 1-1/4 | 6” |
| **04-103** | **7/64** | .1094 | 2.78 mm | 1-1/2 | 6” |
| **04-104** | **1/8** | .1250 | 3.18 mm | 1-5/8 | 6” |
| **04-105** | **9/64** | .1406 | 3.57 mm | 1-3/4 | 6” |
| **04-106** | **5/32** | .1562 | 3.97 mm | 2 | 6” |
| **04-107** | **11/64** | .1719 | 4.37 mm | 2-1/8 | 6” |
| **04-108** | **3/16** | .1875 | 4.76 mm | 2-5/16 | 6” |
| **04-109** | **13/64** | .2031 | 5.16 mm | 2-7/16 | 6” |
| **04-110** | **7/32** | .2188 | 5.56 mm | 2-1/2 | 6” |
| **04-111** | **15/64** | .2344 | 5.95 mm | 2-5/8 | 6” |
| **04-112** | **1/4** | .2500 | 6.35 mm | 2-3/4 | 6” |
| **04-125** | **17/64** | .2656 | 6.75 mm | 2-7/8 | 6” |
| **04-114** | **9/32** | .2812 | 7.14 mm | 2-15/16 | 6” |
| **04-116** | **19/64** | .2969 | 7.54 mm | 3-1/16 | 6” |
| **04-115** | **5/16** | .3125 | 7.94 mm | 3-3/16 | 6” |
| **04-121** | **21/64** | .3281 | 8.33 mm | 3-5/16 | 6” |
| **04-120** | **11/32** | .3438 | 8.73 mm | 3-7/16 | 6” |
| **04-124** | **23/64** | .3594 | 9.13 mm | 3-1/2 | 6” |
| **04-113** | **3/8** | .3750 | 9.53 mm | 3-5/8 | 6” |
| **04-118** | **25/64** | .3906 | 9.92 mm | 3-3/4 | 6” |
| **04-119** | **13/32** | .4062 | 10.32 mm | 3-7/8 | 6” |
| **04-126** | **27/64** | .4219 | 10.72 mm | 3-15/16 | 6” |
| **04-117** | **7/16** | .4375 | 11.11 mm | 3-1/16 | 6” |

## COBALT AIRCRAFT EXTENSION DRILLS

**- LETTER SIZES / 6” OVERALL LENGTH -**

NAS907, Type J Cobalt Extension Length Drill Cobalt HSS
Surface Treated, 135° Split Point



| PART NUMBER | DIAMETER SIZE | DECIMAL EQUIVALENT INCHES | MILLIMETER EQUIVALENT | FLUTE LENGTH INCHES | OVERALL LENGTH INCHES |
|---|---|---|---|---|---|
| **06-408** | **C** | .2420 | 6.15 mm | 2-3/4 | 6” |
| **06-403** | **D** | .2460 | 6.25 mm | 2-3/4 | 6” |
| **06-402** | **F** | .2570 | 6.53 mm | 2-7/8 | 6” |
| **06-401** | **G** | .2610 | 6.63 mm | 2-7/8 | 6” |
| **06-412** | **H** | .2660 | 6.76 mm | 2-7/8 | 6” |
| **06-404** | **J** | .2770 | 7.04 mm | 2-7/8 | 6” |
| **06-405** | **K** | .2810 | 7.14 mm | 2-15/16 | 6” |
| **06-409** | **M** | .2950 | 7.49 mm | 3-1/16 | 6” |
| **06-410** | **N** | .3020 | 7.67 mm | 3-1/16 | 6” |
| **06-411** | **O** | .3160 | 8.03 mm | 3-1/16 | 6” |
| **06-406** | **Q** | .3320 | 8.43 mm | 3-7/16 | 6” |
| **06-407** | **U** | .3680 | 9.35 mm | 3-5/8 | 6” |

# COBALT AIRCRAFT EXTENSION DRILLS

**- WIRE SIZES / 12” OVERALL LENGTH -**

**NAS907, Type J Cobalt Extension Length Drill Cobalt HSS**
**Surface Treated, 135° Split Point**



| PART NUMBER | DIAMTER NUMBER | DECIMAL EQUIVALENT INCHES | MILLIMETER EQUIVALENT | FLUTE LENGTH INCHES | OVERALL LENGTH INCHES |
|---|---|---|---|---|---|
| **07-401** | **1** | .2280 | 5.79 mm | 2-5/8 | 12” |
| **07-402** | **2** | .2210 | 5.61 mm | 2-5/8 | 12” |
| **07-403** | **3** | .2130 | 5.41 mm | 2-1/2 | 12” |
| **07-404** | **4** | .2090 | 5.31 mm | 2-1/2 | 12” |
| **07-405** | **5** | .2055 | 5.22 mm | 2-1/2 | 12” |
| **07-406** | **6** | .2040 | 5.18 mm | 2-1/2 | 12” |
| **07-407** | **7** | .2010 | 5.11 mm | 2-7/16 | 12” |
| **07-408** | **8** | .1990 | 5.05 mm | 2-7/16 | 12” |
| **07-409** | **9** | .1960 | 4.98 mm | 2-7/16 | 12” |
| **07-410** | **10** | .1935 | 4.91 mm | 2-7/16 | 12” |
| **07-411** | **11** | .1910 | 4.85 mm | 2-5/16 | 12” |
| **07-412** | **12** | .1890 | 4.80 mm | 2-5/16 | 12” |
| **07-413** | **13** | .1850 | 4.70 mm | 2-5/16 | 12” |
| **07-414** | **14** | .1820 | 4.62 mm | 2-5/16 | 12” |
| **07-415** | **15** | .1800 | 4.57 mm | 2-3/16 | 12” |
| **07-416** | **16** | .1770 | 4.50 mm | 2-3/16 | 12” |
| **07-417** | **17** | .1730 | 4.39 mm | 2-3/16 | 12” |
| **07-418** | **18** | .1695 | 4.31 mm | 2-1/8 | 12” |
| **07-419** | **19** | .1660 | 4.22 mm | 2-1/8 | 12” |
| **07-420** | **20** | .1610 | 4.09 mm | 2-1/8 | 12” |
| **07-421** | **21** | .1590 | 4.04 mm | 2-1/8 | 12” |
| **07-422** | **22** | .1570 | 3.99 mm | 2 | 12” |
| **07-423** | **23** | .1540 | 3.91 mm | 2 | 12” |
| **07-424** | **24** | .1520 | 3.86 mm | 2 | 12” |
| **07-425** | **25** | .1495 | 3.80 mm | 1-7/8 | 12” |
| **07-426** | **26** | .1470 | 3.73 mm | 1-7/8 | 12” |
| **07-427** | **27** | .1440 | 3.66 mm | 1-7/8 | 12” |
| **07-428** | **28** | .1405 | 3.57 mm | 1-3/4 | 12” |
| **04-429** | **29** | .1360 | 3.45 mm | 1-3/4 | 12” |
| **07-430** | **30** | .1285 | 3.26 mm | 1-5/8 | 12” |
| **07-431** | **31** | .1200 | 3.05 mm | 1-5/8 | 12” |
| **07-432** | **32** | .1160 | 2.95 mm | 1-5/8 | 12” |
| **07-433** | **33** | .1130 | 2.87 mm | 1-1/2 | 12” |
| **07-434** | **34** | .1110 | 2.82 mm | 1-1/2 | 12” |
| **07-435** | **35** | .1100 | 2.79 mm | 1-1/2 | 12” |
| **07-436** | **36** | .1065 | 2.71 mm | 1-7/16 | 12” |
| **07-437** | **37** | .1040 | 2.64 mm | 1-7/16 | 12” |
| **07-438** | **38** | .1015 | 2.58 mm | 1-7/16 | 12” |
| **07-439** | **39** | .0995 | 2.53 mm | 1-3/8 | 12” |
| **07-440** | **40** | .0980 | 2.49 mm | 1-3/8 | 12” |
| **07-441** | **41** | .0960 | 2.44 mm | 1-3/8 | 12” |
| **07-450** | **50** | .0700 | 1.78 mm | 1 | 12” |

# COBALT AIRCRAFT EXTENSION DRILLS

## - FRACTIONAL SIZES / 12” OVERALL LENGTH -

**NAS907, Type J Cobalt Extension Length Drill Cobalt HSS**
**Surface Treated, 135° Split Point**



| PART NUMBER | DIAMETER INCHES | DECIMAL EQUIVALENT INCHES | MILLIMETER EQUIVALENT | FLUTE LENGTH INCHES | OVERALL LENGTH INCHES |
|---|---|---|---|---|---|
| **06-300** | **1/16** | .0625 | 1.59 mm | 7/8 | 12” |
| **06-301** | **5/64** | .0781 | 1.98 mm | 1 | 12” |
| **06-302** | **3/32** | .0938 | 2.38 mm | 1-1/4 | 12” |
| **06-303** | **7/64** | .1094 | 2.78 mm | 1-1/2 | 12” |
| **06-304** | **1/8** | .1250 | 3.18 mm | 1-5/8 | 12” |
| **06-305** | **9/64** | .1406 | 3.57 mm | 1-3/4 | 12” |
| **06-306** | **5/32** | .1562 | 3.97 mm | 2 | 12” |
| **06-307** | **11/64** | .1719 | 4.37 mm | 2-1/8 | 12” |
| **06-308** | **3/16** | .1875 | 4.76 mm | 2-5/16 | 12” |
| **06-309** | **13/64** | .2031 | 5.16 mm | 2-7/16 | 12” |
| **06-310** | **7/32** | .2188 | 5.56 mm | 2-1/2 | 12” |
| **06-311** | **15/64** | .2344 | 5.95 mm | 2-5/8 | 12” |
| **06-312** | **1/4** | .2500 | 6.35 mm | 2-3/4 | 12” |
| **06-316** | **9/32** | .2812 | 7.14 mm | 2-15/16 | 12” |
| **06-317** | **19/64** | .2969 | 7.54 mm | 3-1/16 | 12” |
| **06-313** | **5/16** | .3125 | 7.94 mm | 3-1/16 | 12” |
| **06-326** | **21/64** | .3281 | 8.33 mm | 3-5/16 | 12” |
| **06-321** | **11/32** | .3438 | 8.73 mm | 3-7/16 | 12” |
| **06-322** | **23/64** | .3594 | 9.13 mm | 3-1/2 | 12” |
| **06-314** | **3/8** | .3750 | 9.53 mm | 3-5/8 | 12” |
| **06-327** | **25/64** | .3906 | 9.92 mm | 3-3/4 | 12” |
| **06-320** | **13/32** | .4062 | 10.32 mm | 3-7/8 | 12” |
| **06-324** | **27/64** | .4219 | 10.72 mm | 3-15/16 | 12” |
| **06-318** | **7/16** | .4375 | 11.11 mm | 3-1/16 | 12” |
| **06-328** | **29/64** | .4531 | 11.51 mm | 4-3/16 | 12” |
| **06-315** | **15/32** | .4688 | 11.91 mm | 4-5/16 | 12” |
| **06-329** | **31/64** | .4844 | 12.30 mm | 4-3/8 | 12” |
| **06-319** | **1/2** | .5000 | 12.70 mm | 4-1/2 | 12” |

# THREADED SHANK ADAPTER DRILLS

**COBALT - NAS965D**
**1/4-28 Thread**
**- WIRE SIZES -**








| SIZE | DECIMAL EQUIVALENT INCES | MILLIMETER EQUIVALENT | SHORT SERIES LENGTH | PART NUMBER | LONG SERIES LENGTH | PART NUMBER | STUBBY SERIES LENGTH | PART NUMBER |
|---|---|---|---|---|---|---|---|---|
| 1 | .2280 | 5.79 mm | 1-1/4 | 10-001 | 2-1/8 | 10-201 | 5/8 | 10-301 |
| 2 | .2210 | 5.61 mm | 1-1/4 | 10-002 | 2-1/8 | 10-202 | 5/8 | 10-302 |
| 3 | .2130 | .5.41 mm | 1-1/4 | 10-003 | 2-1/8 | 10-203 | 5/8 | 10-303 |
| 4 | .2090 | 5.31 mm | 1-1/4 | 10-004 | 2-1/8 | 10-204 | 5/8 | 10-304 |
| 5 | .2055 | 5.22 mm | 1-1/4 | 10-005 | 2-1/8 | 10-205 | 5/8 | 10-305 |
| 6 | .2040 | 5.18 mm | 1-1/4 | 10-006 | 2-1/8 | 10-206 | 5/8 | 10-306 |
| 7 | .2010 | 5.11 mm | 1-1/4 | 10-007 | 2-1/8 | 10-207 | 5/8 | 10-307 |
| 8 | .1990 | 5.06 mm | 1-1/4 | 10-008 | 2-1/8 | 10-208 | 5/8 | 10-308 |
| 9 | .1960 | 4.98 mm | 1-1/4 | 10-009 | 2-1/8 | 10-209 | 9/16 | 10-309 |
| 10 | .1935 | 4.92 mm | 1-1/4 | 10-010 | 2-1/8 | 10-210 | 9/16 | 10-310 |
| 11 | .1910 | 4.85 mm | 1-1/4 | 10-011 | 2-1/8 | 10-211 | 9/16 | 10-311 |
| 12 | .1890 | 4.80 mm | 1-1/4 | 10-012 | 2-1/8 | 10-212 | 9/16 | 10-312 |
| 13 | .1850 | 4.70 mm | 1-1/4 | 10-013 | 2-1/8 | 10-213 | 9/16 | 10-313 |
| 14 | .1820 | 4.62 mm | 1-1/4 | 10-014 | 2-1/8 | 10-214 | 9/16 | 10-314 |
| 15 | .1800 | 4.57 mm | 1-1/4 | 10-015 | 2-1/8 | 10-215 | 9/16 | 10-315 |
| 16 | .1170 | 4.50 mm | 1-1/4 | 10-016 | 2-1/8 | 10-216 | 9/16 | 10-316 |
| 17 | .1730 | 4.39 mm | 1-1/4 | 10-017 | 2-1/8 | 10-217 | 9/16 | 10-317 |
| 18 | .1695 | 4.30 mm | 1-1/4 | 10-018 | 2-1/8 | 10-218 | 9/16 | 10-318 |
| 19 | .1660 | 4.22 mm | 1-1/4 | 10-019 | 2-1/8 | 10-219 | 9/16 | 10-319 |
| 20 | .1610 | 4.09 mm | 1-1/4 | 10-020 | 2-1/8 | 10-220 | 9/16 | 10-320 |
| 21 | .1590 | 4.04 mm | 1-1/4 | 10-021 | 2-1/8 | 10-221 | 9/16 | 10-321 |
| 22 | .1570 | 3.99 mm | 1-1/4 | 10-022 | 2-1/8 | 10-222 | 9/16 | 10-322 |
| 23 | .1540 | 3.91 mm | 1-1/4 | 10-023 | 2-1/8 | 10-223 | 9/16 | 10-323 |
| 24 | .1520 | 3.86 mm | 1-1/4 | 10-024 | 2-1/8 | 10-224 | 9/16 | 10-324 |
| 25 | .1495 | 3.80 mm | 1-1/4 | 10-025 | 2-1/8 | 10-225 | 9/16 | 10-325 |
| 26 | .1470 | 3.73 mm | 1-1/4 | 10-026 | 2-1/8 | 10-226 | 9/16 | 10-326 |
| 27 | .1440 | 3.66 mm | 1-1/4 | 10-027 | 2-1/8 | 10-227 | 9/16 | 10-327 |
| 28 | .1405 | 3.57 mm | 1-1/4 | 10-028 | 2-1/8 | 10-228 | 9/16 | 10-328 |
| 29 | .1360 | 3.45 mm | 1-1/4 | 10-029 | 2-1/8 | 10-229 | 9/16 | 10-329 |
| 30 | .1285 | 3.27 mm | 1-1/4 | 10-030 | 2-1/8 | 10-230 | 9/16 | 10-330 |
| 31 | .1200 | 3.05 mm | 1-1/4 | 10-031 | 2-1/8 | 10-231 | 9/16 | 10-331 |
| 32 | .1160 | 2.95 mm | 1-1/4 | 10-032 | 2-1/8 | 10-232 | 9/16 | 10-332 |
| 33 | .1130 | 2.87 mm | 1-1/4 | 10-033 | 2-1/8 | 10-233 | 9/16 | 10-333 |
| 34 | .1110 | 2.82 mm | 1-1/4 | 10-034 | 2-1/8 | 10-234 | 9/16 | 10-334 |
| 35 | .1100 | 2.79 mm | 1-1/4 | 10-035 | 2-1/8 | 10-235 | 1/2 | 10-335 |
| 36 | .1065 | 2.71 mm | 1-1/4 | 10-036 | 2-1/8 | 10-236 | 1/2 | 10-336 |
| 37 | .1040 | 2.64 mm | 1-1/4 | 10-037 | 2-1/8 | 10-237 | 1/2 | 10-337 |
| 38 | .1015 | 2.58 mm | 1-1/4 | 10-038 | 2-1/8 | 10-238 | 1/2 | 10-338 |
| 39 | .0995 | 2.53 mm | 1-1/4 | 10-039 | 2-1/8 | 10-239 | 1/2 | 10-339 |
| 40 | .0980 | 2.49 mm | 1 | 10-040 | 2-1/8 | 10-240 | 1/2 | 10-340 |
| 41 | .0960 | 2.44 mm | 1 | 10-041 | 2-1/8 | 10-241 | 1/2 | 10-341 |
| 42 | .0935 | 2.37 mm | 1 | 10-042 | 2-1/8 | 10-242 | 1/2 | 10-342 |
| 43 | .0890 | 2.26 mm | 1 | 10-043 | 2-1/8 | 10-243 | 1/2 | 10-343 |
| 44 | .0860 | 2.18 mm | 1 | 10-044 | 2-1/8 | 10-244 | 1/2 | 10-344 |
| 45 | .0820 | 2.08 mm | 1 | 10-045 | 2-1/8 | 10-245 | 1/2 | 10-345 |
| 46 | .0810 | 2.06 mm | 1 | 10-046 | 2-1/8 | 10-246 | 1/2 | 10-346 |
| 47 | .0785 | 1.99 mm | 1 | 10-047 | 2-1/8 | 10-247 | 1/2 | 10-347 |
| 48 | .0760 | 1.93 mm | 1 | 10-048 | 2-1/8 | 10-248 | 1/2 | 10-348 |
| 49 | .0730 | 1.85 mm | 1 | 10-049 | 2-1/8 | 10-249 | 1/2 | 10-349 |
| 50 | .0700 | 1.78 mm | 1 | 10-050 | 2-1/8 | 10-250 | 1/2 | 10-350 |

**OTHER LENGTHS AND THREAD SIZES AVAILABLE ON REQUEST**

# THREADED SHANK ADAPTER DRILLS

## COBALT - NAS965D
## 1/4-28 Thread
## - FRACTIONAL SIZES -






| SIZE | DECIMAL EQUIVALENT INCES | MILLIMETER EQUIVALENT | SHORT SERIES LENGTH | PART NUMBER | LONG SERIES LENGTH | PART NUMBER | STUBBY SERIES LENGTH | PART NUMBER |
|---|---|---|---|---|---|---|---|---|
| 1/8 | .1250 | 3.17 mm | 1 | 11-105 | 2-1/8 | 11-205 | 1/2 | 11-305 |
| 5/32 | .1562 | 3.97 mm | 1-1/4 | 11-107 | 2-1/8 | 11-207 | 9/16 | 11-307 |
| 3/16 | .1875 | 4.76 mm | 1-1/4 | 11-109 | 2-1/8 | 11-209 | 9/16 | 11-309 |
| 7/32 | .2188 | 5.56 mm | 1-1/4 | 11-111 | 2-1/8 | 11-211 | 5/8 | 11-311 |
| 1/4 | .2500 | 6.35 mm | 1-1/4 | 11-113 | 2-1/8 | 11-213 | 5/8 | 11-313 |
| 5/16 | .3125 | 7.94 mm | 1-1/4 | 11-117 | 2-1/8 | 11-217 | 5/8 | 11-317 |
| 3/8 | .3750 | 9.52 mm | 1-1/4 | 11-121 | 2-1/8 | 11-221 | 3/4 | 11-321 |

## COBALT - NAS965D
## 1/4-28 Thread
## - LETTER SIZES -






| SIZE | DECIMAL EQUIVALENT INCES | MILLIMETER EQUIVALENT | SHORT SERIES LENGTH | PART NUMBER | LONG SERIES LENGTH | PART NUMBER | STUBBY SERIES LENGTH | PART NUMBER |
|---|---|---|---|---|---|---|---|---|
| C | .2420 | 6.15 mm | 1-1/4 | 12-103 | 2-1/8 | 12-203 | 5/8 | 12-303 |
| D | .2460 | 6.25 mm | 1-1/4 | 12-104 | 2-1/8 | 12-204 | 5/8 | 12-304 |
| F | .2570 | 6.53 mm | 1-1/4 | 12-106 | 2-1/8 | 12-206 | 5/8 | 12-306 |
| G | .2610 | 6.63 mm | 1-1/4 | 12-107 | 2-1/8 | 12-207 | 5/8 | 12-307 |
| H | .2660 | 6.75 mm | 1-1/4 | 12-108 | 2-1/8 | 12-208 | 5/8 | 12-308 |
| J | .2770 | 7.03 mm | 1-1/4 | 12-110 | 2-1/8 | 12-210 | 5/8 | 12-310 |
| K | .2810 | 7.14 mm | 1-1/4 | 12-111 | 2-1/8 | 12-211 | 5/8 | 12-311 |
| L | .2900 | 7.37 mm | 1-1/4 | 12-112 | 2-1/8 | 12-212 | 5/8 | 12-312 |
| M | .2950 | 7.49 mm | 1-1/4 | 12-113 | 2-1/8 | 12-213 | 5/8 | 12-313 |
| N | .3020 | 7.67 mm | 1-1/4 | 12-114 | 2-1/8 | 12-214 | 5/8 | 12-314 |
| O | .3160 | 8.03 mm | 1-1/4 | 12-115 | 2-1/8 | 12-215 | 5/8 | 12-315 |

## COBALT - NAS965D
## 1/4-28 Thread
## - VERY STUBBY / EXTRA LONG -




| SIZE | DECIMAL EQUIVALENT INCES | MILLIMETER EQUIVALENT | VERY STUBBY LENGTH | PART NUMBER | EXTRA LONG LENGTH | PART NUMBER |
|---|---|---|---|---|---|---|
| # 50 | .0700 | 1.78 mm | 3/8 | 10-450 | -- | -- |
| # 40 | .0980 | 2.49 mm | 3/8 | 10-440 | 2-1/2 | 10-140 |
| # 30 | .1285 | 3.26 mm | 3/8 | 10-430 | 2-3/4 | 10-130 |
| # 27 | .1440 | 3.66 mm | 3/8 | 10-427 | 3 | 10-127 |
| # 21 | .1590 | 4.04 mm | 3/8 | 10-421 | 3 | 10-121 |
| # 20 | .1610 | 4.09 mm | 3/8 | 10-420 | 3 | 10-120 |
| # 16 | .1770 | 4.50 mm | 3/8 | 10-416 | 3 | 10-116 |
| # 13 | .1850 | 4.70 mm | 3/8 | 10-413 | 3 | 10-113 |
| # 12 | .1890 | 4.80 mm | 3/8 | 10-412 | 3 | 10-112 |
| # 11 | .1910 | 4.85 mm | 3/8 | 10-411 | 3 | 10-111 |
| # 10 | .1935 | 4.92 mm | 3/8 | 10-410 | 3 | 10-110 |
| # 8 | .1990 | 5.06 mm | 3/8 | 10-408 | 3 | 10-108 |
| # 5 | .2055 | 5.22 mm | 3/8 | 10-405 | 3 | 10-105 |
| 1/4 | .2500 | 6.35 mm | 3/8 | 11-413 | 3 | 10-150 |

**OTHER LENGTHS AND THREAD SIZES AVAILABLE ON REQUEST**

## DRILL STOPS

### AT 570 SERIES

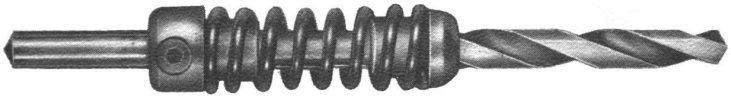

Primarily designed to control hole depth. This tool will also cushion the break-through of a drill and prevent chuck jaws from coming in contact with the skin surface. Unit locks on drill with a set screw.

| PART NO. | DRILL SIZE |
|---|---|
| AT 570-50 | #50 |
| AT 570-40 | #40 |
| AT 570-30 | #30 |
| AT 570-28 | #28 |
| AT 570-21 | #21 |
| AT 570-20 | #20 |
| AT 570-12 | #12 |
| AT 570-11 | #11 |
| AT 570-10 | #10 |
| AT 570-1/4 | 1/4 |
| AT 570-5/16 | 5/16 |

ORDER BY PART NO. ONLY

## PORTABLE DRILL BUSHING ASSEMBLY

### AT 589A . . . AT 589C SERIES

| PART NO. FOR COMPLETE ASSEMBLY OF HOUSING & BUSHINGS | DRILL SIZE REF. | HOUSING PART NO. | BUSHING PART NO. | BUSHING THREAD SIZE |
|---|---|---|---|---|
| AT 589A-.098 | #40 | AT 589AA | AT 589AB-.098 | ½-13 |
| AT 589A-.1285 | #30 | | AT 589AB-.1285 | |
| AT 589A-.159 | #21 | | AT 589AB-.159 | |
| AT 589A-.1562 | 5/32 | | AT 589AB-.1562 | |
| AT 589A-.1875 | 3/16 | | AT 589AB-.1875 | |
| AT 589A-.1935 | #10 | | AT 589AB-.1935 | |
| AT 589A-.2187 | 7/32 | | AT 589AB-.2187 | |
| AT 589A-.250 | 1/4 | | AT 589AB-.250 | |
| AT 589A-.257 | F | | AT 589AB-.257 | |
| AT 589C-.2812 | 9/32 | AT 589CA | AT 589CB-.2812 | ¾-16 |
| AT 589C-.3125 | 5/16 | | AT 589CB-.3125 | |
| AT 589C-.3437 | 11/32 | | AT 589CB-.3437 | |
| AT 589C-.375 | 3/8 | | AT 589CB-.375 | |
| AT 589C-.4375 | 7/16 | | AT 589CB-.4375 | |
| AT 589C-.500 | ½ | | AT 589CB-.500 | |

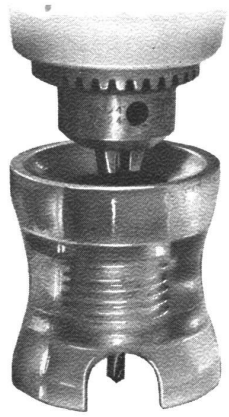

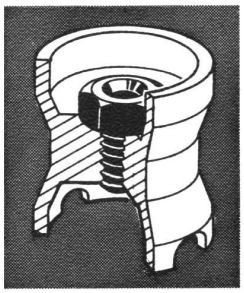

# Bohrbuchsen-Satz
# DRILL BUSHING ASSEMBLY KIT

| Inhalt des Satzes: | CONTENTS OF THE KIT: |
|---|---|
| 1 Aufbewahrungskasten<br>3 Plastik-Gehäuse zur Aufnahme der auswechselbaren Bohrbuchsen | **1 KIT BOX**<br>**3 PLASTIC-HOUSING FOR INTERCHANGEABLE DRILL-BUSHINGS** |
| | |
| 9 Bohrbuchsen in folgenden Größen: | **9 DRILL-BUSHING IN FOLLOWING SIZES:** |
| #40 **(2,50 mm)**<br>#30 **(3,26 mm)**<br>5/32" **(3,97 mm)**<br>#21 **(4,04 mm)**<br>3/16" **(4,76 mm)**<br>#10 **(4,91 mm)**<br>7/32" **(5,56 mm)**<br>1/4" **(6,35 mm)**<br>F **(6,53 mm)** | #40 **(2,50 mm)**<br>#30 **(3,26 mm)**<br>5/32" **(3,97 mm)**<br>#21 **(4,04 mm)**<br>3/16" **(4,76 mm)**<br>#10 **(4,91 mm)**<br>7/32" **(5,56 mm)**<br>1/4" **(6,35 mm)**<br>F **(6,53 mm)** |



**590-DBK**

## PUNCH TYPE STRAP DUPLICATORS
### AT 500 . . . AT 500C SERIES

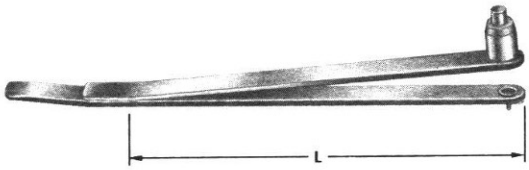


Spring Loaded Strap Duplicator with hardened marking pin permits the marking of sheet stock from a hidden pilot hole on the job, and is of particular help in marking hard-to-reach spots. Bevelled edge on the handle makes it a convenient tool for prying sheets apart.

**ORDER BY PART NO. ONLY**

| PART NO. | PILOT & DRILL SIZE | L |
|---|---|---|
| AT500-51 | #40 | |
| AT500-52 | #30 | |
| AT500-53 | #21 | |
| AT500-54 | #19 | 6¼ |
| AT500-55 | #10 | |
| AT500-56 | # 5 | |
| AT500-57 | "F" | |
| AT500-58 | 1/4 | |
| AT500C-51 | #40 | |
| AT500C-52 | #30 | |
| AT500C-53 | #21 | |
| AT500C-54 | #19 | 13¼ |
| AT500C-55 | #10 | |
| AT500C-56 | # 5 | |
| AT500C-57 | "F" | |
| AT500C-58 | 1/4 | |

## DRILL BUSHING TYPE STRAP DUPLICATORS
### AT 532 . . . AT 532C SERIES

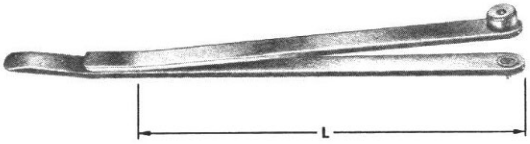


This tool provides an accurate method for drilling duplicate matching holes in over-lapping sheets. Hole to be duplicated is drilled through bushing when pilot is in place.

**ORDER BY PART NO. ONLY**

| PART NO. | PILOT & DRILL SIZE | L |
|---|---|---|
| AT532-61 | #40 | |
| AT532-62 | #30 | |
| AT532-63 | #21 | |
| AT532-64 | #19 | 6¼ |
| AT532-65 | #10 | |
| AT532-66 | # 5 | |
| AT532-67 | "F" | |
| AT532-68 | 1/4 | |
| AT532C-61 | #40 | |
| AT532C-62 | #30 | |
| AT532C-63 | #21 | |
| AT532C-64 | #19 | 13¼ |
| AT532C-65 | #10 | |
| AT532C-66 | # 5 | |
| AT532C-67 | "F" | |
| AT532C-68 | 1/4 | |

## DRILL BUSHING INVERTED PILOT TYPE STRAP DUPLICATORS
### AT 532A . . . AT 532D SERIES

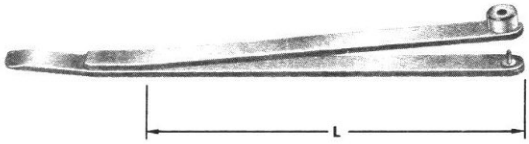


These tools are identical to the AT 532 and AT 532C Series, except that the pilot is inverted to allow hole duplication in places where the sheets cannot be pried apart.

**ORDER BY PART NO. ONLY**

| PART NO. | PILOT & DRILL SIZE | L |
|---|---|---|
| AT532A-61 | #40 | |
| AT532A-62 | #30 | |
| AT532A-63 | #21 | |
| AT532A-64 | #19 | 6¼ |
| AT532A-65 | #10 | |
| AT532A-66 | # 5 | |
| AT532A-67 | "F" | |
| AT532A-68 | 1/4 | |
| AT532D-61 | #40 | |
| AT532D-62 | #30 | |
| AT532D-63 | #21 | |
| AT532D-64 | #19 | 13¼ |
| AT532D-65 | #10 | |
| AT532D-66 | # 5 | |
| AT532D-67 | "F" | |
| AT532D-68 | 1/4 | |

# PLATE NUT DRILL JIGS
## AT 518 SERIES



Designed for accurate drilling of rivet holes for plate nuts. Manufactured with flexible handle to provide hand clearance when jig is in use.

### ONE LUG TYPE

| PART NO. | BOLT SIZE REF. | A | C | D |
|---|---|---|---|---|
| AT518-G | #6 | .344 | .139 | #40 |
| AT518-H | #8 | .344 | .164 | #40 |
| AT518-J | #10 | .344 | .191 | #40 |
| AT518-K | 1/4 | .344 | .248 | #40 |
| AT518-L | #10 Spec. | .344 | .213 | #40 |
| AT518-LF | #8 #10 | .344 | .281 | #40 |
| AT518-YF | 1/4 | .500 | .343 | #40 |

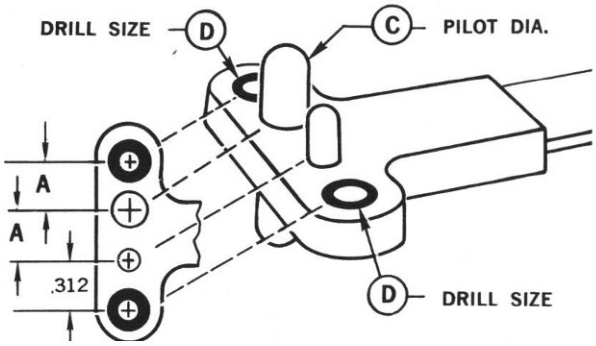


### TWO LUG TYPE

| PART NO. | BOLT SIZE REF. | A | B | C | D |
|---|---|---|---|---|---|
| AT518-A | #6 | .344 | .688 | .139 | #40 |
| AT518-B | #8 | .344 | .688 | .164 | #40 |
| AT518-C | #10 | .344 | .688 | .191 | #40 |
| AT518-D | 1/4 | .500 | 1.000 | .248 | #40 |
| AT518-E | 5/16 | .500 | 1.000 | .312 | #30 |
| AT518-F | 3/8 | .500 | 1.000 | .372 | #30 |
| AT518-M | – | .375 | .750 | .4375 | #40 |
| AT518-N | – | .500 | 1.000 | .6875 | #30 |
| AT518-P | – | .6875 | 1.375 | .811 | #30 |
| AT518-BF | #8 & #10 | .344 | .688 | .281 | #40 |
| AT518-DF | 1/4 | .500 | 1.000 | .343 | #40 |

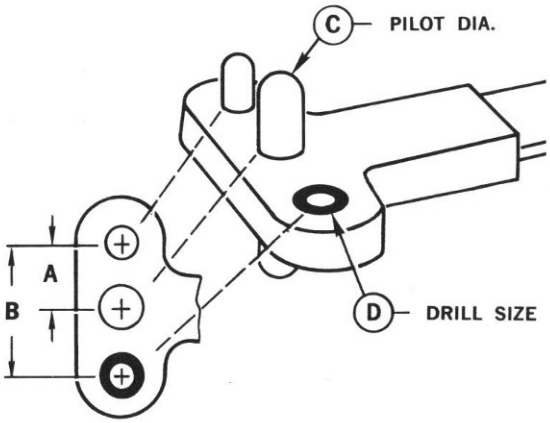


### CORNER TYPE

| PART NO. | BOLT SIZE REF. | A | C | D |
|---|---|---|---|---|
| AT518-R | # 6 | .344 | .139 | # 40 |
| AT518-S | # 8 | .344 | .164 | # 40 |
| AT518-T | # 10 | .344 | .191 | # 40 |
| AT518-U | 1/4 | .500 | .248 | # 40 |
| AT518-V | 5/16 | .500 | .312 | # 30 |
| AT518-W | 3/8 | .500 | .372 | # 30 |
| AT518NAS-C-A5 | 5/16 | .359 | .312 | # 30 |
| AT518NAS-C-A6 | 3/8 | .414 | .372 | # 30 |

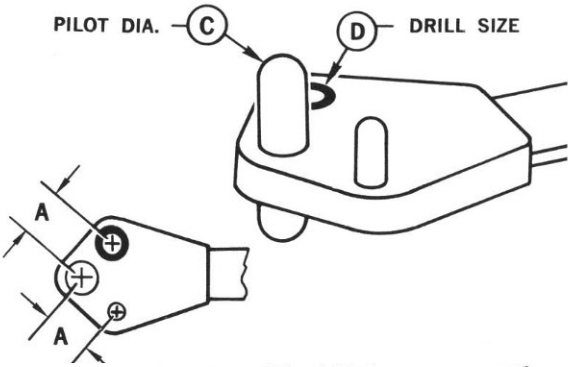


### ONE LUG TYPE

| PART NO. | BOLT SIZE REF. | A | C | D |
|---|---|---|---|---|
| AT518-PA | # 4 | .203 | .112 | #40 |
| AT518-PB | # 6 | .218 | .139 | #40 |
| AT518-PC | # 8 | .234 | .164 | #40 |
| AT518-PD | #10 | .250 | .191 | #40 |
| AT518-PE | #1/4 | .281 | .248 | #40 |
| AT518NAS-B-A02 | # 2 | .125 | .086 | #51 |
| AT518NAS-B-A03 | # 3 | .133 | .099 | #51 |
| AT518NAS-B-A04 | # 4 | .148 | .112 | #51 |
| AT518NAS-B-A06 | # 6 | .171 | .139 | #51 |

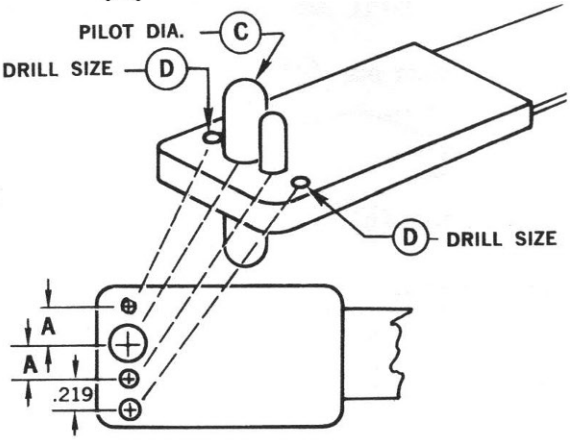

## TWO LUG TYPE

| PART NO. | BOLT SIZE REF. | A | B | C | D |
|---|---|---|---|---|---|
| AT518NA | # 4 | .203 | .406 | .112 | #40 |
| AT518-NB | # 6 | .218 | .436 | .139 | #40 |
| AT518-NC | # 8 | .234 | .468 | .164 | #40 |
| AT518-ND | #10 | .250 | .500 | .191 | #40 |
| AT518-NE | 1/4 | .281 | .562 | .248 | #40 |
| AT518-NF | 5/16 | .3125 | .625 | .312 | #30 |
| AT518NAS-A-A02 | # 2 | .125 | .250 | .086 | #51 |
| AT518NAS-A-A03 | # 3 | .1325 | .265 | .099 | #51 |
| AT518NAS-A-A04 | # 4 | .148 | .296 | .112 | #51 |
| AT518NAS-A-A06 | # 6 | .1715 | .343 | .139 | #51 |

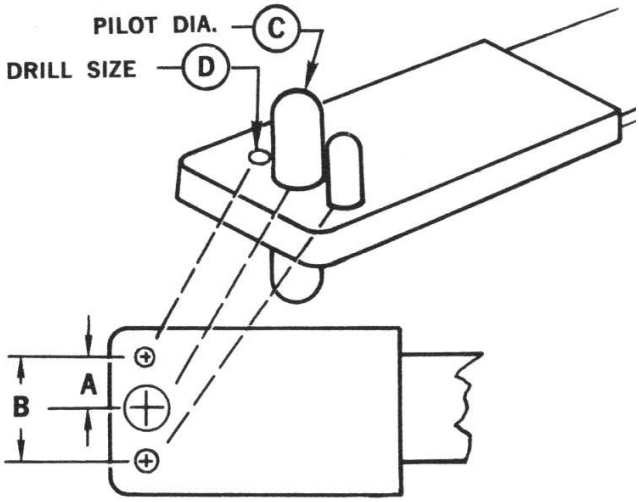


## CORNER TYPE

| PART NO. | BOLT SIZE REF. | A | C | D |
|---|---|---|---|---|
| AT518-SA | # 4 | .203 | .112 | #40 |
| AT518-SB | # 6 | .218 | .139 | #40 |
| AT518-SC | # 8 | .234 | .164 | #40 |
| AT518-SD | #10 | .250 | .191 | #40 |
| AT518-SE | 1/4 | .281 | .248 | #40 |
| AT518-SF | 5/16 | .312 | .312 | #30 |
| AT518NAS-C-A02 | # 2 | .125 | .086 | #51 |
| AT518NAS-C-A03 | # 3 | .138 | .099 | #51 |
| AT518NAS-C-A04 | # 4 | .148 | .112 | #51 |
| AT518NAS-C-A06 | # 6 | .172 | .139 | #51 |

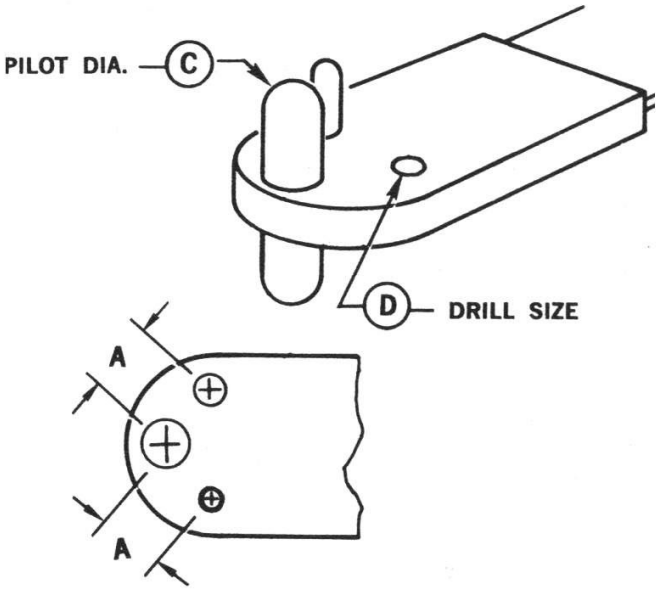


## MINIATURE ANCHORNUT

PLATE NUT DRILL JIG

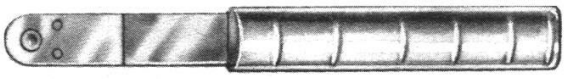

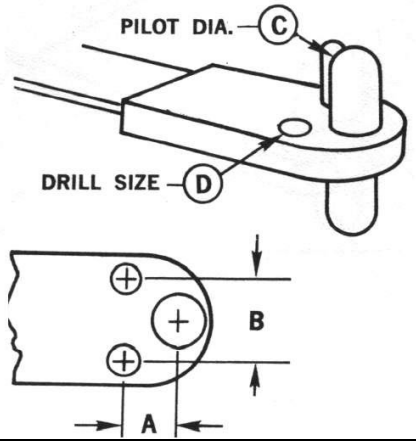


| PART NO. | BOLT SIZE REF. | A | B | C | D |
|---|---|---|---|---|---|
| AT518-TA | #10 | .250 | .219 | .191 | #40 |
| AT518-TB | 1/4 | .281 | .219 | .248 | #40 |
| AT518-TC | 5/16 | .312 | .250 | .312 | #30 |
| AT518NAS-D-A08 | #8 | .234 | .219 | .164 | #40 |
| AT518NAS-D-A5 | 5/16 | .359 | .269 | .312 | #30 |
| AT518NAS-D-A6 | 3/8 | .414 | .269 | .372 | #30 |

# Entgratwerkzeuge
# BURRAWAY TOOLS

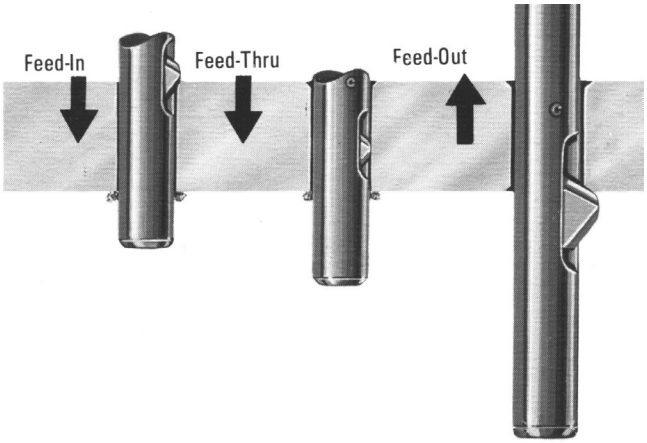


**Type A**

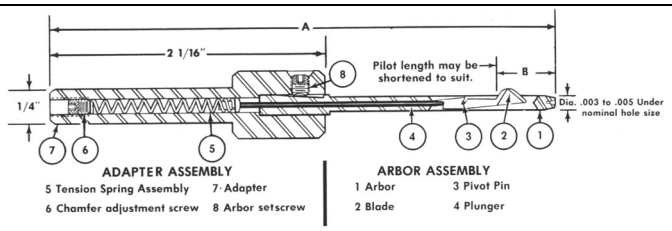


Standard

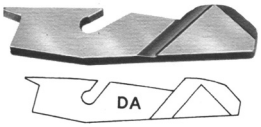


**Ersatzmesser**
REPLACEMENT BLADES

**.0787" (2,0 mm) to 13/64" (5,16 mm)**

| **Artikel Nr.** PART NO. | **Bohrungsmaß** HOLE SIZE | | | **Maß**/DIM. A | **Maß**/DIM. B | **Ersatzmesser Nr.** REPLACEMENT BLADE NO. |
|---|---|---|---|---|---|---|
| **CTP-078** | **.0787"** | | 2,00 mm | 3.3/8" **(85,7 mm)** | .45" **(11,4 mm)** | **CTP-3/32"** |
| **CTP-090** | **.0906"** | | 2,30 mm | 3.3/8" **(85,7 mm)** | .45" **(11,4 mm)** | **CTP-3/32"** |
| **CTP-093** | **.0938"** | 3/32" | 2,38 mm | 3.3/8" **(85,7 mm)** | .45" **(11,4 mm)** | **CTP-3/32"** |
| **CTP-098** | **.0984"** | | 2,50 mm | 3.3/8" **(85,7 mm)** | .45" **(11,4 mm)** | **CTP-3/32"** |
| **CTP-109** | **.1094"** | 7/64" | 2,78 mm | 3.3/8" **(85,7 mm)** | .45" **(11,4 mm)** | **CTP-3/32"** |
| **CTP-118** | **.1181"** | | 3,00 mm | 3.3/8" **(85,7 mm)** | .45" **(11,4 mm)** | **CTP-1/8"** |
| **CTP-125** | **.1250"** | 1/8" | 3,18 mm | 3.3/8" **(85,7 mm)** | .45" **(11,4 mm)** | **CTP-1/8"** |
| **CTP-137** | **.1378"** | | 3,50 mm | 3.3/8" **(85,7 mm)** | .45" **(11,4 mm)** | **CTP-1/8"** |
| **CTP-140** | **.1406"** | 9/64" | 3,57 mm | 3.3/8" **(85,7 mm)** | .45" **(11,4 mm)** | **CTP-1/8"** |
| **CTP-156** | **.1562"** | 5/32" | 3,97 mm | 3.3/8" **(85,7 mm)** | .45" **(11,4 mm)** | **CTP-5/32"** |
| **CTP-157** | **.1575"** | | 4,00 mm | 3.3/8" **(85,7 mm)** | .45" **(11,4 mm)** | **CTP-5/32"** |
| **CTP-171** | **.1719"** | 11/64" | 4,37 mm | 3.3/8" **(85,7 mm)** | .45" **(11,4 mm)** | **CTP-5/32"** |
| **CTP-177** | **.1772"** | | 4,50 mm | 4.1/8" **(104,8 mm)** | .72" **(18,3 mm)** | **CTP-3/16"** |
| **CTP-187** | **.1875"** | 3/16" | 4,76 mm | 4.1/8" **(104,8 mm)** | .72" **(18,3 mm)** | **CTP-3/16"** |
| **CTP-196** | **.1968"** | | 5,00 mm | 4.1/8" **(104,8 mm)** | .72" **(18,3 mm)** | **CTP-3/16"** |
| **CTP-203** | **.2031"** | 13/64" | 5,16 mm | 4.1/8" **(104,8 mm)** | .72" **(18,3 mm)** | **CTP-3/16"** |

**Andere Abmessungen auf Anfrage /** OTHER DIMENSIONS ON REQUEST

# Entgratwerkzeuge
# BURRAWAY TOOLS

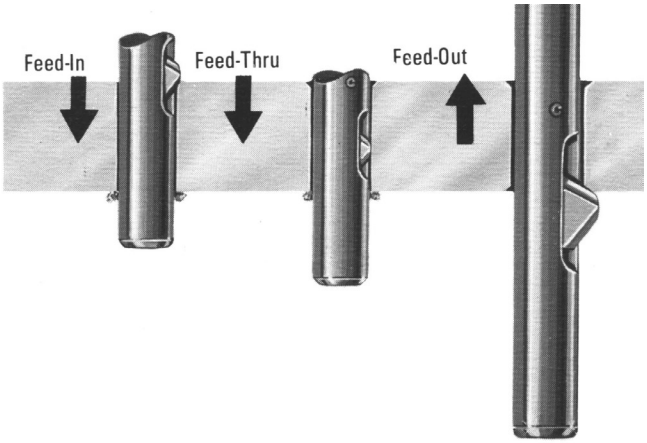


**Type B**

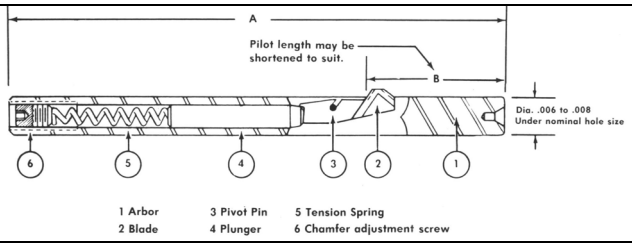


Standard

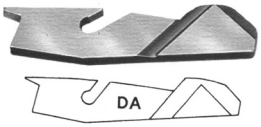


**Ersatzmesser**
REPLACEMENT BLADES

**7/32" (5,56 mm) to 3/4" (19,05 mm)**

| **Artikel Nr.** PART NO. | **Bohrungsmaß** HOLE SIZE | | | **Maß**/DIM. A | **Maß**/DIM. B | **Ersatzmesser Nr.** REPLACEMENT BLADE NO. |
|---|---|---|---|---|---|---|
| **CTP-216** | **.2165"** | | 5,50 mm | 4.1/2" **(114,3 mm)** | .87" **(22,1 mm)** | **CTP-1** |
| **CTP-218** | **.2188"** | 7/32" | 5,56 mm | 4.1/2" **(114,3 mm)** | .87" **(22,1 mm)** | **CTP-1** |
| **CTP-234** | **.2344"** | 15/64" | 5,95 mm | 4.1/2" **(114,3 mm)** | .87" **(22,1 mm)** | **CTP-1** |
| **CTP-236** | **.2362"** | | 6,00 mm | 4.1/2" **(114,3 mm)** | .87" **(22,1 mm)** | **CTP-1** |
| **CTP-250** | **.2500"** | 1/4" | 6,35 mm | 4.1/2" **(114,3 mm)** | .87" **(22,1 mm)** | **CTP-1** |
| **CTP-255** | **.2559"** | | 6,50 mm | 4.1/2" **(114,3 mm)** | .87" **(22,1 mm)** | **CTP-1** |
| **CTP-265** | **.2656"** | 17/64" | 6,75 mm | 4.1/2" **(114,3 mm)** | .87" **(22,1 mm)** | **CTP-1** |
| **CTP-275** | **.2756"** | | 7,00 mm | 4.1/2" **(114,3 mm)** | .87" **(22,1 mm)** | **CTP-1** |
| **CTP-281** | **.2812"** | 9/32" | 7,14 mm | 4.1/2" **(114,3 mm)** | .87" **(22,1 mm)** | **CTP-1** |
| **CTP-295** | **.2953"** | | 7,50 mm | 4.1/2" **(114,3 mm)** | .96" **(24,4 mm)** | **CTP-2** |
| **CTP-296** | **.2969"** | 19/64" | 7,54 mm | 4.1/2" **(114,3 mm)** | .96" **(24,4 mm)** | **CTP-2** |
| **CTP-312** | **.3125"** | 5/16" | 7,94 mm | 4.1/2" **(114,3 mm)** | .96" **(24,4 mm)** | **CTP-2** |
| **CTP-315** | **.3150"** | | 8,00 mm | 4.1/2" **(114,3 mm)** | .96" **(24,4 mm)** | **CTP-2** |
| **CTP-328** | **.3281"** | 21/64" | 8,33 mm | 4.1/2" **(114,3 mm)** | .96" **(24,4 mm)** | **CTP-2** |
| **CTP-334** | **.3346"** | | 8,50 mm | 4.1/2" **(114,3 mm)** | .96" **(24,4 mm)** | **CTP-2** |
| **CTP-343** | **.3438"** | 11/32" | 8,73 mm | 4.1/2" **(114,3 mm)** | .96" **(24,4 mm)** | **CTP-2** |
| **CTP-354** | **.3543"** | | 9,00 mm | 5" **(127,0 mm)** | 1.00" **(25,4 mm)** | **CTP-3** |
| **CTP-359** | **.3594"** | 23/64" | 9,13 mm | 5" **(127,0 mm)** | 1.00" **(25,4 mm)** | **CTP-3** |
| **CTP-374** | **.3740"** | | 9,50 mm | 5" **(127,0 mm)** | 1.00" **(25,4 mm)** | **CTP-3** |
| **CTP-375** | **.3750"** | 3/8" | 9,53 mm | 5" **(127,0 mm)** | 1.00" **(25,4 mm)** | **CTP-3** |
| **CTP-390** | **.3906"** | 25/64" | 9,92 mm | 5" **(127,0 mm)** | 1.00" **(25,4 mm)** | **CTP-3** |
| **CTP-393** | **.3937"** | | 10,00 mm | 5" **(127,0 mm)** | 1.00" **(25,4 mm)** | **CTP-3** |

**Andere Abmessungen auf Anfrage /** OTHER DIMENSIONS ON REQUEST

# Drehmomentschrauber mit Pistolengriff und verstellbarer Ausrückkupplung

## Adjustable Clutch Pistol Grip Screwdriver




**Performance:**

Torque: 20 in. lb (2.3 Nm) - 140 in. lb (15.8 Nm)
Speed: 300 rpm - 2500 rpm

**Features:**

Reversible
Trigger Start
Rapid or Shuttle Reverse
Comfort Grip

CE

### Adjustable Clutch Pistol Grip Screwdrivers

| Model Number | Max. Torque (Soft Joint) | | Free Speed | Weight | | Length | | Side To Center | | Air Consumption | | Sound Level |
|---|---|---|---|---|---|---|---|---|---|---|---|---|
| | in. lb | Nm | rpm | lb | kg | in. | mm | in. | mm | cfm | l/s | dB(A) |
| **Trigger Start - Rapid Reverse** | | | | | | | | | | | | |
| 1OM2405Q | 20 | 2.3 | 2000 | 1.9 | 0.86 | 7.8 | 198 | 0.7 | 17 | 8 | 4 | 75 |
| 1OM2305Q | 25 | 2.8 | 1400 | 2.1 | 0.95 | 8.8 | 224 | 0.7 | 17 | 8 | 4 | 75 |
| 1OM2205Q | 35 | 4.0 | 1000 | 2.1 | 0.95 | 8.8 | 224 | 0.7 | 17 | 8 | 4 | 75 |
| 1OM2105Q | 50 | 5.7 | 725 | 2.1 | 0.95 | 8.8 | 224 | 0.7 | 17 | 8 | 4 | 75 |
| **.6 HP Trigger Start - Shuttle Reverse** | | | | | | | | | | | | |
| SSD6P25AC | 40 | 4.5 | 2500 | 2.6 | 1.16 | 8.5 | 216 | 0.8 | 20 | 25 | 12 | 80 |
| SSD6P20AC | 55 | 6.2 | 2000 | 2.6 | 1.16 | 8.5 | 216 | 0.8 | 20 | 25 | 12 | 80 |
| SSD6P12AC | 100 | 11.3 | 1200 | 3.0 | 1.36 | 10.3 | 262 | 0.8 | 20 | 25 | 12 | 80 |
| SSD6P7AC | 140 | 15.8 | 700 | 3.0 | 1.36 | 10.3 | 262 | 0.8 | 20 | 25 | 12 | 80 |
| **1 HP Trigger Start - Shuttle Reverse** | | | | | | | | | | | | |
| SSD10P25AC | 60 | 6.8 | 2500 | 2.8 | 1.25 | 8.4 | 213 | 0.8 | 20 | 30 | 14 | 80 |
| SSD10P20AC | 80 | 9.0 | 2000 | 2.8 | 1.25 | 8.4 | 213 | 0.8 | 20 | 30 | 14 | 80 |
| SSD10P12AC | 120 | 13.5 | 1200 | 3.2 | 1.45 | 10.2 | 259 | 0.8 | 20 | 30 | 14 | 80 |
| SSD10P7AC | 140 | 15.8 | 700 | 3.2 | 1.45 | 10.2 | 259 | 0.8 | 20 | 30 | 14 | 80 |
| SSD10P5AC | 140 | 15.8 | 500 | 3.2 | 1.45 | 10.2 | 259 | 0.8 | 20 | 30 | 14 | 80 |
| SSD10P3AC | 140 | 15.8 | 300 | 3.2 | 1.45 | 10.2 | 259 | 0.8 | 20 | 30 | 14 | 80 |

**General:**

Air Inlet Size: 1/4" NPT • Recommended Hose Size: 1/4" (6 mm) (1OM series); 3/8" (10 mm) • Performance rated @ 90 psig (6.2 bar) air pressure

**Standard Equipment:**

Parts List • Safety and Instruction Manual • Comfort Grip • Clutch Adjustment Wrench

# HI-TORQUE DRIVER





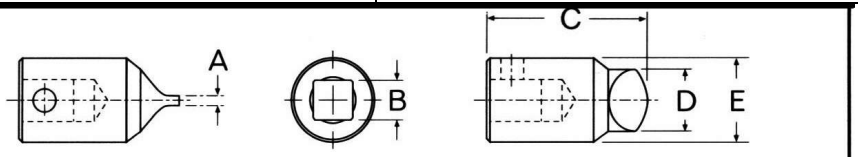


| Zephyr Part No | A (Ref) | B (Ref) | C (Ref) | D (Ref) | E (Ref) | Recess | Nom. Screw Size | Driver Number | MIL* |
|---|---|---|---|---|---|---|---|---|---|
| ZHTS-1 | .049 | 1/4 | 1 | .274 | 1/2 | 1 | 3, 4, 5, 6 | HTS-1 | MIL-B-9946-1 |
| ZHTS-2 | .059 | 1/4 | 1 | .295 | 1/2 | 2 | 8 | HTS-2 | MIL-B-9946-2 |
| ZHTS-3 | .059 | 1/4 | 1 | .377 | 1/2 | 3 | 10 | HTS-3 | MIL-B-9946-3 |
| ZHTS-4 | .073 | 1/4 | 1 | .502 | 1/2 | 4 | 1/4 | HTS-4 | MIL-B-9946-4 |
| ZHTS-4A | .073 | 3/8 | 1 | .502 | 1/2 | 4 | 1/4 | HTS-4A | MIL-B-9946-4A |
| ZHTS-5 | .079 | 3/8 | 1 1/4 | .629 | 3/4 | 5 | 5/16 | HTS-5 | MIL-B-9946-5 |
| ZHTS-6 | .095 | 3/8 | 1 1/4 | .745 | 3/4 | 6 | 3/8 | HTS-6 | MIL-B-9946-6 |
| ZHTS-7 | .112 | 1/2 | 1 5/8 | .884 | 1 | 7 | 7/16 | HTS-7 | MIL-B-9946-7 |
| ZHTS-8 | .142 | 1/2 | 1 5/8 | .995 | 1 | 8 | 1/2 | HTS-8 | MIL-B-9946-8 |

*Also conforms to MS33750 Hi Torque® is a registered Trademark of Voi-Shan.

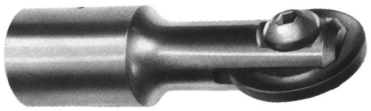

HT 3000M Series
Two-Piece Drivers

## HT 3000M SERIES

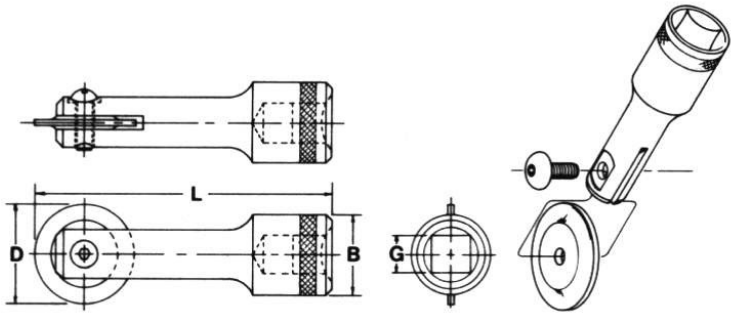


| BOLT NOMINAL DIAMETER | HI-TORQUE RECESS NUMBER | ORDER BY HI-TORQUE TOOL NUMBER BELOW | | B DIA. | D DIA. | G SQUARE DRIVE SOCKET | L |
|---|---|---|---|---|---|---|---|
| | | COMPLETE ASSEMBLY | BLADE ONLY | | | | |
| #10 | HT3 | HT3203M | HTB3M | .50 | .552 | .25 | 1.36 |
| 1/4 | HT4 | HT3304M | HTB4M | .75 | .864 | .37 | 2.67 |
| 5/16 | HT5 | HT3305M | HTB5M | .75 | .990 | .37 | 2.73 |
| 3/8 | HT6 | HT3306M | HTB6M | .75 | 1.240 | .37 | 2.73 |
| 3/8 | HT6 | HT3406M | HTB6M | 1.00 | 1.240 | .50 | 3.17 |
| 7/16 | HT7 | HT3407M | HTB7M | 1.00 | 1.375 | .50 | 3.23 |
| 1/2 | HT8 | HT3408M | HTB8M | 1.00 | 1.500 | .50 | 3.30 |
| 9/16 | HT9 | HT3409M | HTB9M | 1.00 | 1.750 | .50 | 3.42 |
| 5/8 | HT10 | HT3410M | HTB10M | 1.00 | 2.000 | .50 | 3.55 |

Ersatzschraube/Replacement Screw: Button Head Cap Screw 8-32 x 1/4"

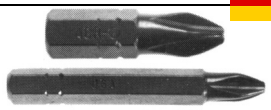

1/4" HEX SHANK

## PHILLIPS INSERT BITS

| Artikel Nr. PART NO. | Größe POINT SIZE | Gesamtlänge OVERALL LENGTH | Körperdurchmesser BODY DIAMETER |
|---|---|---|---|
| **D1220AA** | **0** | **1"** (25,4 mm) | |
| **D1221AA** | **1** | **1"** (25,4 mm) | |
| **D1221AA-15** | **1** | **1.1/2"** (38,1 mm) | |
| **D1221AA-2** | **1** | **2"** (50,8 mm) | |
| **D1222AA** | **2** | **1"** (25,4 mm) | |
| **D1222AA-15** | **2** | **1.1/2"** (38,1 mm) | |
| **D1222AA-2** | **2** | **2"** (50,8 mm) | |
| **D1222AA-25** | **2** | **2.1/2"** (63,8 mm) | |
| **D1223AA** | **3** | **1"** (25,4 mm) | |
| **D1224AA** | **4** | **1.1/4"** (31,8 mm) | |

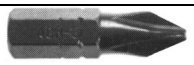

1/4" HEX SHANK

## PHILLIPS INSERT BITS MILLED TYPE

| Artikel Nr. PART NO. | Größe POINT SIZE | Gesamtlänge OVERALL LENGTH | Körperdurchmesser BODY DIAMETER |
|---|---|---|---|
| **D1221AM** | **1** | **1"** (25,4 mm) | |
| **D1222AM** | **2** | **1"** (25,4 mm) | |
| **D1223AM** | **3** | **1"** (25,4 mm) | |



1/4" HEX SHANK

## ACR - PHILLIPS INSERT BITS
**WITH REMOVAL-RIPS**

| Artikel Nr. PART NO. | Größe POINT SIZE | Gesamtlänge OVERALL LENGTH | Körperdurchmesser BODY DIAMETER |
|---|---|---|---|
| **D1221AA-R** | **1** | **1"** (25,4 mm) | |
| **D1222AA-R** | **2** | **1"** (25,4 mm) | |
| **D1223AA-R** | **3** | **1"** (25,4 mm) | |



1/4" HEX SHANK

## ACR - PHILLIPS INSERT BITS
**WITH REMOVAL & INSTALLATION RIPS**

| Artikel Nr. PART NO. | Größe POINT SIZE | Gesamtlänge OVERALL LENGTH | Körperdurchmesser BODY DIAMETER |
|---|---|---|---|
| **D1221AA-ACR-B** | **1** | **1"** (25,4 mm) | |
| **D1222AA-ACR-B** | **2** | **1"** (25,4 mm) | |
| **D1223AA-ACR-B** | **3** | **1"** (25,4 mm) | |



1/4" HEX SHANK

## ACR - PHILLIPS INSERT BITS MILLED TYPE - WITH REMOVAL-RIPS

| Artikel Nr. PART NO. | Größe POINT SIZE | Gesamtlänge OVERALL LENGTH | Körperdurchmesser BODY DIAMETER |
|---|---|---|---|
| **D1221AM-R** | **1** | **1"** (25,4 mm) | |
| **D1222AM-R** | **2** | **1"** (25,4 mm) | |
| **D1223AM-R** | **3** | **1"** (25,4 mm) | |

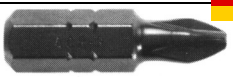

5/16" HEX SHANK

## PHILLIPS INSERT BITS

| Artikel Nr. PART NO. | Größe POINT SIZE | Gesamtlänge OVERALL LENGTH | Körperdurchmesser BODY DIAMETER |
|---|---|---|---|
| D1231AA | 1 | 1.1/4" (31,8 mm) | |
| D1232AA | 2 | 1.1/4" (31,8 mm) | |
| D1233AA | 3 | 1.1/4" (31,8 mm) | |
| D1234AA | 4 | 1.1/4" (31,8 mm) | |
| D1234AA-15 | 4 | 1.1/2" (38,1 mm) | |

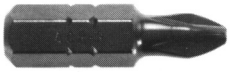

5/16" HEX SHANK

## ACR - PHILLIPS INSERT BITS
### WITH REMOVAL-RIPS

| Artikel Nr. PART NO. | Größe POINT SIZE | Gesamtlänge OVERALL LENGTH | Körperdurchmesser BODY DIAMETER |
|---|---|---|---|
| D1231AA-R | 1 | 1.1/4" (31,8 mm) | |
| D1232AA-R | 2 | 1.1/4" (31,8 mm) | |
| D1233AA-R | 3 | 1.1/4" (31,8 mm) | |



1/4" HEX SHANK

## PHILLIPS POWER BITS

| Artikel Nr. PART NO. | Größe POINT SIZE | Gesamtlänge OVERALL LENGTH | Körperdurchmesser BODY DIAMETER |
|---|---|---|---|
| E1101AA | 1 | 1.15/16" (49,2 mm) | 3/16" (4,76 mm) |
| E1102AA | 2 | 1.15/16" (49,2 mm) | 1/4" (6,35 mm) |
| E1103AA | 3 | 1.15/16" (49,2 mm) | 1/4" (6,35 mm) |
| E1101AA-275 | 1 | 2.3/4" (69,9 mm) | 3/16" (4,76 mm) |
| E1102AA-275 | 2 | 2.3/4" (69,9 mm) | 1/4" (6,35 mm) |
| E1103AA-275 | 3 | 2.3/4" (69,9 mm) | 1/4" (6,35 mm) |
| E1101AA-35 | 1 | 3" (76,2 mm) | 3/16" (4,76 mm) |
| E1102AA-35 | 2 | 3" (76,2 mm) | 1/4" (6,35 mm) |
| E1103AA-35 | 3 | 3" (76,2 mm) | 1/4" (6,35 mm) |
| E1101AA-6 | 1 | 6" (152,4 mm) | 3/16" (4,76 mm) |
| E1102AA-6 | 2 | 6" (152,4 mm) | 1/4" (6,35 mm) |
| E1103AA-6 | 3 | 6" (152,4 mm) | 1/4" (6,35 mm) |



1/4" HEX SHANK

## ACR - PHILLIPS POWER BITS
### WITH REMOVAL-RIPS

| Artikel Nr. PART NO. | Größe POINT SIZE | Gesamtlänge OVERALL LENGTH | Körperdurchmesser BODY DIAMETER |
|---|---|---|---|
| E1101AA-R | 1 | 1.15/16" (49,2 mm) | 3/16" (4,76 mm) |
| E1102AA-R | 2 | 1.15/16" (49,2 mm) | 1/4" (6,35 mm) |
| E1103AA-R | 3 | 1.15/16" (49,2 mm) | 1/4" (6,35 mm) |
| E1101AA-275-R | 1 | 2.3/4" (69,9 mm) | 3/16" (4,76 mm) |
| E1102AA-275-R | 2 | 2.3/4" (69,9 mm) | 1/4" (6,35 mm) |
| E1103AA-275-R | 3 | 2.3/4" (69,9 mm) | 1/4" (6,35 mm) |
| E1101AA-35-R | 1 | 3.1/2" (88,9 mm) | 3/16" (4,76 mm) |
| E1102AA-35-R | 2 | 3.1/2" (88,9 mm) | 1/4" (6,35 mm) |
| E1103AA-35-R | 3 | 3.1/2" (88,9 mm) | 1/4" (6,35 mm) |
| E1101AA-6-R | 1 | 6" (152,4 mm) | 3/16" (4,76 mm) |
| E1102AA-6-R | 2 | 6" (152,4 mm) | 1/4" (6,35 mm) |
| E1103AA-6-R | 3 | 6" (152,4 mm) | 1/4" (6,35 mm) |



1/4" HEX SHANK

## SLOTTED INSERT BITS

| Artikel Nr. PART NO. | Schraubengröße SCREW SIZE | Blatt-Stärke ca. BLADE THICKNESS APPR. | Blatt-Weite ca. BLADE WIDTH APPR. | Gesamtlänge OVERALL LENGTH |
|---|---|---|---|---|
| H3199A | 2F-3R | .026" (0,66 mm) | .138" (3,51 mm) | 1" (25,4 mm) |
| H3201A | 3F-4R | .030" (0,76 mm) | .154" (3,91 mm) | 1" (25,4 mm) |
| H3211A | 4F-5R | .034" (0,86 mm) | .170" (4,32 mm) | 1" (25,4 mm) |
| H3205A | 5F-6R | .036" (0,91 mm) | .219" (5,56 mm) | 1" (25,4 mm) |
| H3212A | 6F-8R | .040" (1,02 mm) | .219" (5,56 mm) | 1" (25,4 mm) |
| H3213A | 8F-10R | .042" (1,07 mm) | .250" (6,35 mm) | 1" (25,4 mm) |
| H3214A | 10F-12R | .046" (1,17 mm) | .281" (7,14 mm) | 1" (25,4 mm) |
| H3215A | 12F-14R | .050" (1,27 mm) | .297" (7,54 mm) | 1" (25,4 mm) |



1/4" HEX SHANK

## SLOTTED INSERT BITS

| Artikel Nr. PART NO. | Schraubengröße SCREW SIZE | Blatt-Stärke ca. BLADE THICKNESS APPR. | Blatt-Weite ca. BLADE WIDTH APPR. | Gesamtlänge OVERALL LENGTH |
|---|---|---|---|---|
| H3219A | 2F-3R | .026" (0,66 mm) | .138" (3,51 mm) | 1.1/2" (38,1 mm) |
| H3220A | 3F-4R | .030" (0,76 mm) | .154" (3,91 mm) | 1.1/2" (38,1 mm) |
| H3221A | 4F-5R | .034" (0,86 mm) | .188" (4,78 mm) | 1.1/2" (38,1 mm) |
| H3222A | 6F-8R | .040" (1,02 mm) | .218" (5,54 mm) | 1.1/2" (38,1 mm) |
| H3223A | 8F-10R | .042" (1,07 mm) | .250" (6,35 mm) | 1.1/2" (38,1 mm) |
| H3224A | 10F-12R | .046" (1,17 mm) | .281" (7,14 mm) | 1.1/2" (38,1 mm) |
| H3225A | 12F-14R | .050" (1,27 mm) | .297" (7,54 mm) | 1.1/2" (38,1 mm) |
| H3226A | 14F-16R | .055" (1,40 mm) | .344" (8,74 mm) | 1.1/2" (38,1 mm) |

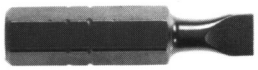

5/16" HEX SHANK

## SLOTTED INSERT BITS

| Artikel Nr. PART NO. | Schraubengröße SCREW SIZE | Blatt-Stärke ca. BLADE THICKNESS APPR. | Blatt-Weite ca. BLADE WIDTH APPR. | Gesamtlänge OVERALL LENGTH |
|---|---|---|---|---|
| H3231A | 4F-5R | .034" (0,86 mm) | .188" (4,78 mm) | 1.1/2" (38,1 mm) |
| H3232A | 6F-8R | .040" (1,02 mm) | .218" (5,54 mm) | 1.1/2" (38,1 mm) |
| H3233A | 8F-10R | .042" (1,07 mm) | .250" (6,35 mm) | 1.1/2" (38,1 mm) |
| H3234A | 10F-12R | .046" (1,17 mm) | .281" (7,14 mm) | 1.1/2" (38,1 mm) |
| H3235A | 12F-14R | .050" (1,27 mm) | .297" (7,54 mm) | 1.1/2" (38,1 mm) |
| H3236A | 14F-16R | .055" (1,40 mm) | .344" (8,74 mm) | 1.1/2" (38,1 mm) |

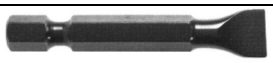

1/4" HEX SHANK

## SLOTTED POWER BITS

| Artikel Nr. PART NO. | Schraubengröße SCREW SIZE | Blatt-Stärke ca. BLADE THICKNESS APPR. | Blatt-Weite ca. BLADE WIDTH APPR. | Gesamtlänge OVERALL LENGTH |
|---|---|---|---|---|
| E3104A | 8F-10R | .042" (1,07 mm) | .275" (6,99 mm) | 1.15/16" (49,2 mm) |
| E3105A | 10F-12R | .046" (1,17 mm) | .312" (7,92 mm) | 1.15/16" (49,2 mm) |
| E3106A | 12F-14R | .050" (1,27 mm) | .360" (9,14 mm) | 1.15/16" (49,2 mm) |
| E3104A275 | 8F-10R | .042" (1,07 mm) | .275" (6,99 mm) | 2.3/4" (69,9 mm) |
| E3105A275 | 10F-12R | .046" (1,17 mm) | .312" (7,92 mm) | 2.3/4" (69,9 mm) |
| E3106A275 | 12F-14R | .050" (1,27 mm) | .360" (9,14 mm) | 2.3/4" (69,9 mm) |
| E3104A3 | 8F-10R | .042" (1,07 mm) | .275" (6,99 mm) | 3" (76,2 mm) |
| E3105A3 | 10F-12R | .046" (1,17 mm) | .312" (7,92 mm) | 3" (76,2 mm) |
| E3106A3 | 12F-14R | .050" (1,27 mm) | .360" (9,14 mm) | 3" (76,2 mm) |



1/4" HEX SHANK

## SLOTTED POWER BITS
### REDUCED SHANK DIAMETER

| Artikel Nr. PART NO. | Schraubengröße SCREW SIZE | Blatt-Stärke ca. BLADE THICKNESS APPR. | Blatt-Weite ca. BLADE WIDTH APPR. | Gesamtlänge OVERALL LENGTH |
|---|---|---|---|---|
| E3098A | 1F-2R | .022" (0,56 mm) | .122" (3,10 mm) | 1.15/16" (49,2 mm) |
| E3100A | 3F-4R | .030" (0,76 mm) | .154" (3,91 mm) | 1.15/16" (49,2 mm) |
| E3101A | 4F-5R | .034" (0,86 mm) | .188" (4,78 mm) | 1.15/16" (49,2 mm) |
| E3102A | 5F-6R | .036" (0,91 mm) | .250" (6,35 mm) | 1.15/16" (49,2 mm) |
| E3103A | 6F-8R | .038" (0,97 mm) | .250" (6,35 mm) | 1.15/16" (49,2 mm) |
| E3101A275 | 4F-5R | .034" (0,86 mm) | .188" (4,78 mm) | 2.3/4" (69,9 mm) |
| E3102A275 | 5F-6R | .036" (0,91 mm) | .250" (6,35 mm) | 2.3/4" (69,9 mm) |
| E3103A275 | 6F-8R | .038" (0,97 mm) | .250" (6,35 mm) | 2.3/4" (69,9 mm) |
| E3098A3 | 1F-2R | .022" (0,56 mm) | .122" (3,10 mm) | 3" (76,2 mm) |
| E3100A3 | 3F-4R | .030" (0,76 mm) | .154" (3,91 mm) | 3" (76,2 mm) |
| E3101A3 | 4F-5R | .034" (0,86 mm) | .188" (4,78 mm) | 3" (76,2 mm) |
| E3102A3 | 5F-6R | .036" (0,91 mm) | .250" (6,35 mm) | 3" (76,2 mm) |
| E3103A3 | 6F-8R | .038" (0,97 mm) | .250" (6,35 mm) | 3" (76,2 mm) |



1/4" HEX SHANK

## FRENCH RECESS INSERT BITS

| Artikel Nr. PART NO. | Größe POINT SIZE | Gesamtlänge OVERALL LENGTH | Körperdurchmesser BODY DIAMETER |
|---|---|---|---|
| H7224AA | 4 | 1" (25,4 mm) | |
| H7225AA | 5 | 1" (25,4 mm) | |
| H7226AA | 6 | 1" (25,4 mm) | |
| H7228AA | 8 | 1" (25,4 mm) | |

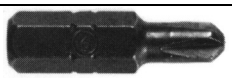

5/16" HEX SHANK

## FRENCH RECESS INSERT BITS

| Artikel Nr. PART NO. | Größe POINT SIZE | Gesamtlänge OVERALL LENGTH | Körperdurchmesser BODY DIAMETER |
|---|---|---|---|
| H7326AA | 6 | 1.1/4" (31,8 mm) | |
| H7328AA | 8 | 1.1/4" (31,8 mm) | |



## MORTORQ SPIRAL DRIVE INSERT BITS

| Artikel Nr. PART NO. | Größe POINT SIZE | Gesamtlänge OVERALL LENGTH | Sechskantschaft HEX SHANK |
|---|---|---|---|
| ZMT-00 | 00 | 1" (25,4 mm) | 1/4" |
| ZMT-0 | 0 | 1" (25,4 mm) | 1/4" |
| ZMT-1 | 1 | 1" (25,4 mm) | 1/4" |
| ZMT-2 | 2 | 1" (25,4 mm) | 1/4" |
| Z5MT-3 | 3 | 1" (25,4 mm) | 5/16" |



## MORTORQ SPIRAL POWER BITS

| Artikel Nr. PART NO. | Größe POINT SIZE | Gesamtlänge OVERALL LENGTH | Sechskantschaft HEX SHANK |
|---|---|---|---|
| ZMTP-0 | 0 | 1.15/16" (49,2 mm) | 1/4" |
| ZMTP-1 | 1 | 1.15/16" (49,2 mm) | 1/4" |
| ZMTP-2 | 2 | 1.15/16" (49,2 mm) | 1/4" |
| Z7MTP-3 | 3 | 3.1/2" (88,9 mm) | 7/16" |
| Z7MTP-4 | 4 | 3.1/2" (88,9 mm) | 7/16" |
| Z10MTP-5 | 5 | 3.1/2" (88,9 mm) | 5/8" |



1/4" HEX SHANK

## SOCKET HEAD (ALLEN) INSERT BITS

| Artikel Nr.<br>PART NO. | Größe<br>HEX SIZE | Gesamtlänge<br>OVERALL LENGTH | Körperdurchmesser<br>BODY DIAMETER |
|---|---|---|---|
| **H5221A** | **1/16"** (1,59 mm) | **1"** (25,4 mm) | |
| **H5222A** | **5/64"** (1,98 mm) | **1"** (25,4 mm) | |
| **H5223A** | **3/32"** (2,38 mm) | **1"** (25,4 mm) | |
| **H5224A** | **7/64"** (2,78mm) | **1"** (25,4 mm) | |
| **H5225A** | **1/8"** (3,18 mm) | **1"** (25,4 mm) | |
| **H5226A** | **9/64"** (3,57 mm) | **1"** (25,4 mm) | |
| **H5227A** | **5/32"** (3,97 mm) | **1.5/16"** (33,3 mm) | |
| **H5228A** | **3/16"** (4,76 mm) | **1.5/16"** (33,3 mm) | |
| **H5229A** | **7/32"** (5,56 mm) | **1.5/16"** (33,3 mm) | |
| **H5220A** | **1/4"** (6,35 mm) | **1.5/16"** (33,3 mm) | |



5/16" HEX SHANK

## SOCKET HEAD (ALLEN) INSERT BITS

| Artikel Nr.<br>PART NO. | Größe<br>HEX SIZE | Gesamtlänge<br>OVERALL LENGTH | Körperdurchmesser<br>BODY DIAMETER |
|---|---|---|---|
| **H5234A** | **5/32"** (3,97 mm) | **1.5/16"** (33,3 mm) | |
| **H5235A** | **3/16"** (4,76 mm) | **1.5/16"** (33,3 mm) | |
| **H5236A** | **7/32"** (5,56 mm) | **1.5/16"** (33,3 mm) | |
| **H5237A** | **1/4"** (6,35 mm) | **1.5/16"** (33,3 mm) | |
| **H5238A** | **5/16"** (7,94 mm) | **1.5/16"** (33,3 mm) | |
| **H5239A** | **3/8"** (9,53 mm) | **1.5/16"** (33,3 mm) | |



1/4" HEX SHANK

## SOCKET HEAD (ALLEN) INSERT BITS METRIC

| Artikel Nr.<br>PART NO. | Größe<br>HEX SIZE | Gesamtlänge<br>OVERALL LENGTH | Körperdurchmesser<br>BODY DIAMETER |
|---|---|---|---|
| **H52215XM** | **1,5 mm** (.059) | **1"** (25,4 mm) | |
| **H5222XM** | **2,0 mm** (.079) | **1"** (25,4 mm) | |
| **H52225XM** | **2,5 mm** (.098) | **1"** (25,4 mm) | |
| **H5223XM** | **3,0 mm** (.118) | **1"** (25,4 mm) | |
| **H5204XM** | **4,0 mm** (.157) | **1"** (25,4 mm) | |
| **H5205XM** | **5,0 mm** (.197) | **1"** (25,4 mm) | |
| **H5206XM** | **6,0 mm** (.236) | **1"** (25,4 mm) | |
| **H5207XM** | **7,0 mm** (.276) | **1"** (25,4 mm) | |
| **H5208XM** | **8,0 mm** (.315) | **1"** (25,4 mm) | |
| **H5224XM** | **4,0 mm** (.157) | **1.5/16"** (33,3 mm) | |
| **H5225XM** | **5,0 mm** (.197) | **1.5/16"** (33,3 mm) | |
| **H5226XM** | **6,0 mm** (.236) | **1.5/16"** (33,3 mm) | |
| **H5227XM** | **7,0 mm** (.276) | **1.5/16"** (33,3 mm) | |
| **H5228XM** | **8,0 mm** (.315) | **1.1/4"** (31,7 mm) | |



5/16" HEX SHANK

## SOCKET HEAD (ALLEN) INSERT BITS METRIC

| Artikel Nr. PART NO. | Größe HEX SIZE | Gesamtlänge OVERALL LENGTH | Körperdurchmesser BODY DIAMETER |
|---|---|---|---|
| H5235XM | 5,0 mm (.197) | 1.5/16" (33,3 mm) | |
| H5236XM | 6,0 mm (.236) | 1.5/16" (33,3 mm) | |
| H5238XM | 8,0 mm (.315) | 1.5/16" (33,3 mm) | |
| H5230XM | 10,0 mm (.394) | 1.5/16" (33,3 mm) | |



1/4" HEX SHANK

## SOCKET HEAD (ALLEN) POWER BITS METRIC

| Artikel Nr. PART NO. | Größe HEX SIZE | Gesamtlänge OVERALL LENGTH | Körperdurchmesser BODY DIAMETER |
|---|---|---|---|
| E5102XM | 2,0 mm (.079) | 1.15/16" (49,2 mm) | |
| E51025XM | 2,5 mm (.098) | 1.15/16" (49,2 mm) | |
| E5103XM | 3,0 mm (.118) | 1.15/16" (49,2 mm) | |
| E5104XM | 4,0 mm (.157) | 1.15/16" (49,2 mm) | |
| E5105XM | 5,0 mm (.197) | 1.15/16" (49,2 mm) | |
| E5106XM | 6,0 mm (.236) | 1.15/16" (49,2 mm) | |
| E5108XM | 8,0 mm (.315) | 1.15/16" (49,2 mm) | |
| E5110XM | 10,0 mm (.394) | 1.15/16" (49,2 mm) | |

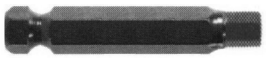

7/16" HEX SHANK

## SOCKET HEAD (ALLEN) POWER BITS METRIC

| Artikel Nr. PART NO. | Größe HEX SIZE | Gesamtlänge OVERALL LENGTH | Körperdurchmesser BODY DIAMETER |
|---|---|---|---|
| E5095XM35 | 5,0 mm (.197) | 3.1/2" (88,9 mm) | |
| E5096XM35 | 6,0 mm (.236) | 3.1/2" (88,9 mm) | |
| E5098XM35 | 8,0 mm (.315) | 3.1/2" (88,9 mm) | |
| E5090XM35 | 10,0 mm (.394) | 3.1/2" (88,9 mm) | |



1/4" HEX SHANK

## SQUARE RECESS INSERT BITS

| Artikel Nr. PART NO. | Größe POINT SIZE | Schraubengröße SCREW SIZE | Gesamtlänge OVERALL LENGTH |
|---|---|---|---|
| H8100XX | 0 | 3 & 4 | 1" (25,4 mm) |
| H8101XX | 1 | 5, 6, 7 | 1" (25,4 mm) |
| H8102XX | 2 | 8, 9, 10 | 1" (25,4 mm) |
| H8103XX | 3 | 12, 14, 1/4 | 1" (25,4 mm) |



1/4" / 5/16" HEX SHANK

## SPANNER TAMPER RESISTANT

| Artikel Nr. PART NO. | Nenngröße DRIVER SIZE | Größe (Ref.) POINT SIZE (Ref.) | Hex Shank | Gesamtlänge OVERALL LENGTH |
|---|---|---|---|---|
| J9221 | 4 | .130" | 1/4" | 1" (25,4 mm) |
| J9222 | 6 | .174" | 1/4" | 1" (25,4 mm) |
| J9223 | 8 | .211" | 1/4" | 1" (25,4 mm) |
| J9224 | 10 | .249" | 1/4" | 1" (25,4 mm) |
| J9231A | 4 | .130" | 5/16" | 1.1/2" (38,1 mm) |
| J9232A | 6 | .174" | 5/16" | 1.1/2" (38,1 mm) |
| J9233A | 8 | .211" | 5/16" | 1.1/2" (38,1 mm) |

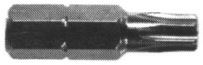

1/4" HEX SHANK

## TORX INSERT BITS

| Artikel Nr. PART NO. | Nenngröße DRIVER SIZE | Größe (Ref.) POINT SIZE (Ref.) | Gesamtlänge OVERALL LENGTH |
|---|---|---|---|
| ZOT6X | T6 | .065" | 1" (25,4 mm) |
| ZOT7X | T7 | .077" | 1" (25,4 mm) |
| ZOT8X | T8 | .090" | 1" (25,4 mm) |
| ZOT9X | T9 | .097" | 1" (25,4 mm) |
| ZOT10X | T10 | .107" | 1" (25,4 mm) |
| ZOT15X | T15 | .128" | 1" (25,4 mm) |
| ZOT20X | T20 | .151" | 1" (25,4 mm) |
| ZOT25X | T25 | .173" | 1" (25,4 mm) |
| ZOT27X | T27 | .195 | 1" (25,4 mm) |
| ZOT30X | T30 | .216" | 1" (25,4 mm) |
| ZOT40X | T40 | .260" | 1" (25,4 mm) |

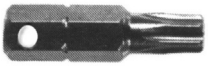

1/4" HEX SHANK

## TORX INSERT BITS
### WITH HOLE THRU HEX SHANK

| Artikel Nr. PART NO. | Nenngröße DRIVER SIZE | Größe (Ref.) POINT SIZE (Ref.) | Gesamtlänge OVERALL LENGTH |
|---|---|---|---|
| ZOT20XD | T20 | .151" | 1" (25,4 mm) |
| ZOT27XD | T27 | .195 | 1" (25,4 mm) |
| ZOT30XD | T30 | .216" | 1" (25,4 mm) |
| ZOT40XD | T40 | .260" | 1" (25,4 mm) |
| ZOT45XD | T45 | .306" | 1" (25,4 mm) |

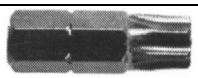

5/16" HEX SHANK

## TORX INSERT BITS

| Artikel Nr. PART NO. | Nenngröße DRIVER SIZE | Größe (Ref.) POINT SIZE (Ref.) | Gesamtlänge OVERALL LENGTH |
|---|---|---|---|
| Z5T30X | T30 | .216" | 1.1/4" (31,8 mm) |
| Z5T40X | T40 | .260" | 1.1/4" (31,8 mm) |
| Z5T45X | T45 | .306" | 1.1/4" (31,8 mm) |
| Z5T50X | T50 | .346" | 1.1/4" (31,8 mm) |
| Z5T55X | T55 | .440" | 1.1/4" (31,8 mm) |

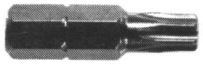

1/4" / 5/16" / 7/16" / 1/2" HEX SHANK

## TORX PLUS INSERT BITS

| Artikel Nr. PART NO. | Nenngröße DRIVER SIZE | Größe (Ref.) POINT SIZE (Ref.) | Hex Shank | Gesamtlänge OVERALL LENGTH |
|---|---|---|---|---|
| Z0T10IP | 10IP | .107" | 1/4" | 1" (25,4 mm) |
| ZOT15IP | 15IP | .128" | 1/4" | 1" (25,4 mm) |
| ZOT20IP | 20IP | .151" | 1/4" | 1" (25,4 mm) |
| ZOT25IP | 25IP | .173" | 1/4" | 1" (25,4 mm) |
| ZOT30IP | 30IP | .195" | 1/4" | 1" (25,4 mm) |
| Z5T40IP | 40IP | .260" | 5/16" | 1.1/4" (31,8 mm) |
| Z5T45IP | 45IP | .306" | 5/16" | 1.1/4" (31,8 mm) |
| Z5T50IP | 50IP | .346" | 5/16" | 1.1/4" (31,8 mm) |
| Z5T55IP | 55IP | .440" | 7/16" | 1.1/2" (38,1 mm) |
| Z8T60IP | 60IP | .520" | 1/2" | 1.1/2" (38,1 mm) |

**Andere Abmessungen auf Anfrage /** OTHER DIMENSIONS ON REQUEST

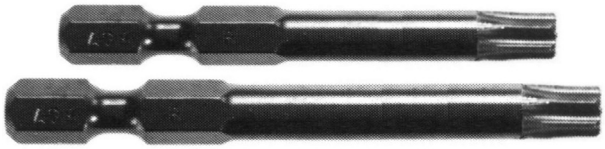

1/4" HEX SHANK

# TORX POWER BITS

| Artikel Nr. PART NO. | Nenngröße DRIVER SIZE | Größe (Ref.) POINT SIZE (Ref.) | Gesamtlänge OVERALL LENGTH | Durchmesser BODY DIAMETER |
|---|---|---|---|---|
| **ZPT6X** | **T6** | **.065"** | **1.15/16"** (49,2 mm) | **1/8"** (3,18 mm) |
| **ZPT7X** | **T7** | **.077"** | **1.15/16"** (49,2 mm) | **1/8"** (3,18 mm) |
| **ZPT8X** | **T8** | **.090"** | **1.15/16"** (49,2 mm) | **1/8"** (3,18 mm) |
| **ZPT9X** | **T9** | **.097"** | **1.15/16"** (49,2 mm) | **1/8"** (3,18 mm) |
| **ZPT10X** | **T10** | **.107"** | **1.15/16"** (49,2 mm) | **5/32"** (3,97 mm) |
| **ZPT15X** | **T15** | **.128"** | **1.15/16"** (49,2 mm) | **5/32"** (3,97 mm) |
| **ZPT20X** | **T20** | **.151"** | **1.15/16"** (49,2 mm) | **3/16"** (4,76 mm) |
| **ZPT25X** | **T25** | **.173"** | **1.15/16"** (49,2 mm) | **3/16"** (4,76 mm) |
| **ZPT27X** | **T27** | **.195** | **1.15/16"** (49,2 mm) | **1/4"** (6,35 mm) |
| **ZPT30X** | **T30** | **.216"** | **1.15/16"** (49,2 mm) | **1/4"** (6,35 mm) |
| **ZPT40X** | **T40** | **.260"** | **1.15/16"** (49,2 mm) | **5/16"** (7,93 mm) |
| | | | | |
| **ZPT7X275** | **T7** | **.077"** | **2.3/4"** (69,9 mm) | **1/8"** (3,18 mm) |
| **ZPT8X275** | **T8** | **.090"** | **2.3/4"** (69,9 mm) | **1/8"** (3,18 mm) |
| **ZPT9X275** | **T9** | **.097"** | **2.3/4"** (69,9 mm) | **1/8"** (3,18 mm) |
| **ZPT10X275** | **T10** | **.107"** | **2.3/4"** (69,9 mm) | **5/32"** (3,97 mm) |
| **ZPT15X275** | **T15** | **.128"** | **2.3/4"** (69,9 mm) | **5/32"** (3,97 mm) |
| **ZPT20X275** | **T20** | **.151"** | **2.3/4"** (69,9 mm) | **3/16"** (4,76 mm) |
| **ZPT25X275** | **T25** | **.173"** | **2.3/4"** (69,9 mm) | **3/16"** (4,76 mm) |
| **ZPT27X275** | **T27** | **.195** | **2.3/4"** (69,9 mm) | **1/4"** (6,35 mm) |
| **ZPT30X275** | **T30** | **.216"** | **2.3/4"** (69,9 mm) | **1/4"** (6,35 mm) |
| **ZPT40X275** | **T40** | **.260"** | **2.3/4"** (69,9 mm) | **5/16"** (7,93 mm) |
| | | | | |
| **ZPT7X35** | **T7** | **.077"** | **3.1/2"** (88,9 mm) | **1/8"** (3,18 mm) |
| **ZPT8X35** | **T8** | **.090"** | **3.1/2"** (88,9 mm) | **1/8"** (3,18 mm) |
| **ZPT9X35** | **T9** | **.097"** | **3.1/2"** (88,9 mm) | **1/8"** (3,18 mm) |
| **ZPT10X35** | **T10** | **.107"** | **3.1/2"** (88,9 mm) | **5/32"** (3,97 mm) |
| **ZPT15X35** | **T15** | **.128"** | **3.1/2"** (88,9 mm) | **5/32"** (3,97 mm) |
| **ZPT20X35** | **T20** | **.151"** | **3.1/2"** (88,9 mm) | **3/16"** (4,76 mm) |
| **ZPT25X35** | **T25** | **.173"** | **3.1/2"** (88,9 mm) | **3/16"** (4,76 mm) |
| **ZPT27X35** | **T27** | **.195** | **3.1/2"** (88,9 mm) | **1/4"** (6,35 mm) |
| **ZPT30X35** | **T30** | **.216"** | **3.1/2"** (88,9 mm) | **1/4"** (6,35 mm) |
| **ZPT40X35** | **T40** | **.260"** | **3.1/2"** (88,9 mm) | **5/16"** (7,93 mm) |
| | | | | |
| **ZPT7X6** | **T7** | **.077"** | **6"** (152,4 mm) | **1/8"** (3,18 mm) |
| **ZPT8X6** | **T8** | **.090"** | **6"** (152,4 mm) | **1/8"** (3,18 mm) |
| **ZPT9X6** | **T9** | **.097"** | **6"** (152,4 mm) | **1/8"** (3,18 mm) |
| **ZPT10X6** | **T10** | **.107"** | **6"** (152,4 mm) | **5/32"** (3,97 mm) |
| **ZPT15X6** | **T15** | **.128"** | **6"** (152,4 mm) | **5/32"** (3,97 mm) |
| **ZPT20X6** | **T20** | **.151"** | **6"** (152,4 mm) | **3/16"** (4,76 mm) |
| **ZPT25X6** | **T25** | **.173"** | **6"** (152,4 mm) | **3/16"** (4,76 mm) |
| **ZPT27X6** | **T27** | **.195** | **6"** (152,4 mm) | **1/4"** (6,35 mm) |
| **ZPT30X6** | **T30** | **.216"** | **6"** (152,4 mm) | **1/4"** (6,35 mm) |
| **ZPT40X6** | **T40** | **.260"** | **6"** (152,4 mm) | **5/16"** (7,93 mm) |

**Andere Abmessungen auf Anfrage /** OTHER DIMENSIONS ON REQUEST

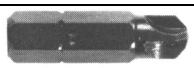

1/4" HEX SHANK

## TORQ-SET INSERT BITS

| Artikel Nr. PART NO. | Schraubengröße SCREW SIZE | Gesamtlänge OVERALL LENGTH | Körperdurchmesser BODY DIAMETER |
|---|---|---|---|
| TS212-0 | 0 | 1" (25,4 mm) | |
| TS212-1 | 1 | 1" (25,4 mm) | |
| TS212-2 | 2 | 1" (25,4 mm) | |
| TS212-3 | 3 | 1" (25,4 mm) | |
| TS212-4 | 4 | 1" (25,4 mm) | |
| TS212-5 | 5 | 1" (25,4 mm) | |
| TS212-6 | 6 | 1" (25,4 mm) | |
| TS212-8 | 8 | 1" (25,4 mm) | |
| TS212-10 | 10 | 1" (25,4 mm) | |
| TS212-1/4 | 1/4 | 1" (25,4 mm) | |

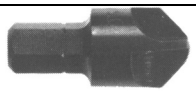

1/4" HEX SHANK

## TORQ-SET INSERT BITS
### BULLNOSE

| Artikel Nr. PART NO. | Schraubengröße SCREW SIZE | Gesamtlänge OVERALL LENGTH | Körperdurchmesser BODY DIAMETER |
|---|---|---|---|
| TS212-1/4B | 1/4 | 1" (25,4 mm) | |
| TS212-5/16B | 5/16 | 1" (25,4 mm) | |



5/16" HEX SHANK

## TORQ-SET INSERT BITS

| Artikel Nr. PART NO. | Schraubengröße SCREW SIZE | Gesamtlänge OVERALL LENGTH | Körperdurchmesser BODY DIAMETER |
|---|---|---|---|
| TS212-8A | 8 | 1.1/4" (31,8 mm) | |
| TS212-10A | 10 | 1.1/4" (31,8 mm) | |
| TS212-1/4A | 1/4 | 1.1/4" (31,8 mm) | |
| TS212-5/16A | 5/16 | 1.1/4" (31,8 mm) | |
| TS212-3/8A | 3/8 | 1.1/4" (31,8 mm) | |

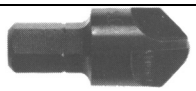

5/16" HEX SHANK

## TORQ-SET INSERT BITS
### BULLNOSE

| Artikel Nr. PART NO. | Schraubengröße SCREW SIZE | Gesamtlänge OVERALL LENGTH | Körperdurchmesser BODY DIAMETER |
|---|---|---|---|
| TS212-5/16AB | 5/16 | 1.1/4" (31,8 mm) | |

**Andere Abmessungen auf Anfrage /** OTHER DIMENSIONS ON REQUEST



1/4" HEX SHANK

## ACR - TORQ-SET INSERT BITS
**WITH REMOVAL-RIPS**

| **Artikel Nr.** PART NO. | **Schraubengröße** SCREW SIZE | **Gesamtlänge** OVERALL LENGTH | **Körperdurchmesser** BODY DIAMETER |
|---|---|---|---|
| **TS212-6R** | **6** | **1"** (25,4 mm) | |
| **TS212-8R** | **8** | **1"** (25,4 mm) | |
| **TS212-10R** | **10** | **1"** (25,4 mm) | |
| **TS212-1/4R** | **1/4** | **1"** (25,4 mm) | |

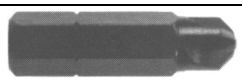

5/16" HEX SHANK

## ACR - TORQ-SET INSERT BITS
**WITH REMOVAL-RIPS**

| **Artikel Nr.** PART NO. | **Schraubengröße** SCREW SIZE | **Gesamtlänge** OVERALL LENGTH | **Körperdurchmesser** BODY DIAMETER |
|---|---|---|---|
| **TS212-8AR** | **8** | **1.1/4"** (31,8 mm) | |
| **TS212-10AR** | **10** | **1.1/4"** (31,8 mm) | |
| **TS212-1/4AR** | **1/4** | **1.1/4"** (31,8 mm) | |
| **TS212-5/16AR** | **5/16** | **1.1/4"** (31,8 mm) | |

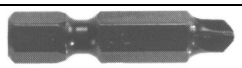

1/4" HEX SHANK

## TORQ-SET POWER BITS

| **Artikel Nr.** PART NO. | **Schraubengröße** SCREW SIZE | **Gesamtlänge** OVERALL LENGTH | **Körperdurchmesser** BODY DIAMETER |
|---|---|---|---|
| **TS170-0** | **0** | **1.1/4"** (31,8 mm) | |
| **TS170-1** | **1** | **1.1/4"** (31,8 mm) | |
| **TS170-2** | **2** | **1.1/4"** (31,8 mm) | |
| **TS170-3** | **3** | **1.1/4"** (31,8 mm) | |
| **TS170-4** | **4** | **1.1/4"** (31,8 mm) | |
| **TS170-5** | **5** | **1.1/4"** (31,8 mm) | |
| **TS170-6** | **6** | **1.1/4"** (31,8 mm) | |
| **TS170-8** | **8** | **1.1/4"** (31,8 mm) | |
| **TS170-10** | **10** | **1.1/4"** (31,8 mm) | |

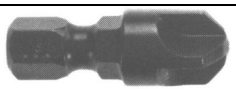

1/4" HEX SHANK

## TORQ-SET POWER BITS
**BULLNOSE**

| **Artikel Nr.** PART NO. | **Schraubengröße** SCREW SIZE | **Gesamtlänge** OVERALL LENGTH | **Körperdurchmesser** BODY DIAMETER |
|---|---|---|---|
| **TS170-1/4B** | **1/4** | **1.1/4"** (31,8 mm) | |
| **TS170-5/16B** | **5/16** | **1.1/4"** (31,8 mm) | |
| **TS170-3/8B** | **3/8** | **1.1/4"** (31,8 mm) | |

**Andere Abmessungen auf Anfrage /** OTHER DIMENSIONS ON REQUEST



1/4" HEX SHANK

## TORQ-SET POWER BITS

| Artikel Nr. PART NO. | Schraubengröße SCREW SIZE | Gesamtlänge OVERALL LENGTH | Körperdurchmesser BODY DIAMETER |
|---|---|---|---|
| TS273-0 | 0 | 1.15/16" (49,2 mm) | 1/8" (3,18 mm) |
| TS273-1 | 1 | 1.15/16" (49,2 mm) | 1/8" (3,18 mm) |
| TS273-2 | 2 | 1.15/16" (49,2 mm) | 1/8" (3,18 mm) |
| TS273-3 | 3 | 1.15/16" (49,2 mm) | 5/32" (3,97 mm) |
| TS273-4 | 4 | 1.15/16" (49,2 mm) | 5/32" (3,97 mm) |
| TS273-5 | 5 | 1.15/16" (49,2 mm) | 3/16" (4,76 mm) |
| TS273-6 | 6 | 1.15/16" (49,2 mm) | 3/16" (4,76 mm) |
| TS273-8 | 8 | 1.15/16" (49,2 mm) | 1/4" (6,35 mm) |
| TS273-10 | 10 | 1.15/16" (49,2 mm) | 1/4" (6,35 mm) |

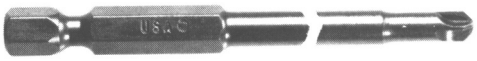

1/4" HEX SHANK

## TORQ-SET POWER BITS

| Artikel Nr. PART NO. | Schraubengröße SCREW SIZE | Gesamtlänge OVERALL LENGTH | Körperdurchmesser BODY DIAMETER |
|---|---|---|---|
| TS265-0-35 | 0 | 3.1/2" (88,9 mm) | 1/8" (3,18 mm) |
| TS265-1-35 | 1 | 3.1/2" (88,9 mm) | 1/8" (3,18 mm) |
| TS265-2-35 | 2 | 3.1/2" (88,9 mm) | 1/8" (3,18 mm) |
| TS265-3-35 | 3 | 3.1/2" (88,9 mm) | 5/32" (3,97 mm) |
| TS265-4-35 | 4 | 3.1/2" (88,9 mm) | 5/32" (3,97 mm) |
| TS265-5-35 | 5 | 3.1/2" (88,9 mm) | 3/16" (4,76 mm) |
| TS265-6-35 | 6 | 3.1/2" (88,9 mm) | 3/16" (4,76 mm) |
| TS265-8-35 | 8 | 3.1/2" (88,9 mm) | 1/4" (6,35 mm) |
| TS265-10-35 | 10 | 3.1/2" (88,9 mm) | 1/4" (6,35 mm) |

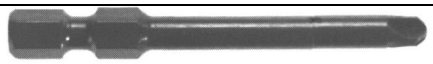

1/4" HEX SHANK

## TORQ-SET POWER BITS

| Artikel Nr. PART NO. | Schraubengröße SCREW SIZE | Gesamtlänge OVERALL LENGTH | Körperdurchmesser BODY DIAMETER |
|---|---|---|---|
| TS265-0-6 | 0 | 6" (152,4 mm) | 1/8" (3,18 mm) |
| TS265-1-6 | 1 | 6" (152,4 mm) | 1/8" (3,18 mm) |
| TS265-2-6 | 2 | 6" (152,4 mm) | 1/8" (3,18 mm) |
| TS265-3-6 | 3 | 6" (152,4 mm) | 5/32" (3,97 mm) |
| TS265-4-6 | 4 | 6" (152,4 mm) | 5/32" (3,97 mm) |
| TS265-5-6 | 5 | 6" (152,4 mm) | 3/16" (4,76 mm) |
| TS265-6-6 | 6 | 6" (152,4 mm) | 3/16" (4,76 mm) |
| TS265-8-6 | 8 | 6" (152,4 mm) | 1/4" (6,35 mm) |
| TS265-10-6 | 10 | 6" (152,4 mm) | 1/4" (6,35 mm) |

**Andere Abmessungen auf Anfrage /** OTHER DIMENSIONS ON REQUEST

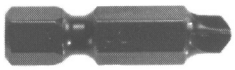

5/16" HEX SHANK

## TORQ-SET POWER BITS

| Artikel Nr. PART NO. | Schraubengröße SCREW SIZE | Gesamtlänge OVERALL LENGTH | Körperdurchmesser BODY DIAMETER |
|---|---|---|---|
| TS170-8A | 8 | 1.1/4" (31,8 mm) | |
| TS170-10A | 10 | 1.1/4" (31,8 mm) | |



5/16" HEX SHANK

## TORQ-SET POWER BITS
**BULLNOSE**

| Artikel Nr. PART NO. | Schraubengröße SCREW SIZE | Gesamtlänge OVERALL LENGTH | Körperdurchmesser BODY DIAMETER |
|---|---|---|---|
| TS170-1/4A | 1/4 | 1.1/4" (31,8 mm) | |
| TS170-5/16A | 5/16 | 1.1/4" (31,8 mm) | |
| TS170-3/8A | 3/8 | 1.1/4" (31,8 mm) | |
| TS170-7/16A | 7/16 | 1.1/4" (31,8 mm) | |
| TS170-1/2A | 1/2 | 1.1/4" (31,8 mm) | |

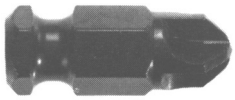

7/16" HEX SHANK

## TORQ-SET POWER BITS

| Artikel Nr. PART NO. | Schraubengröße SCREW SIZE | Gesamtlänge OVERALL LENGTH | Körperdurchmesser BODY DIAMETER |
|---|---|---|---|
| TS170-1/4 | 1/4 | 1.1/4" (31,8 mm) | |
| TS170-5/16 | 5/16 | 1.1/4" (31,8 mm) | |
| TS170-3/8 | 3/8 | 1.1/4" (31,8 mm) | |
| TS170-7/16 | 7/16 | 1.1/4" (31,8 mm) | |



7/16" HEX SHANK

## TORQ-SET POWER BITS

| Artikel Nr. PART NO. | Schraubengröße SCREW SIZE | Gesamtlänge OVERALL LENGTH | Körperdurchmesser BODY DIAMETER |
|---|---|---|---|
| TS273-1/4 | 1/4 | 1.15/16" (49,2 mm) | 11/32" (8,73 mm) |
| TS273-5/16 | 5/16 | 1.15/16" (49,2 mm) | 3/8" (9,53 mm) |
| TS273-3/8 | 3/8 | 1.15/16" (49,2 mm) | 7/16" (11,11 mm) |
| TS273-7/16 | 7/16 | 1.15/16" (49,2 mm) | 7/16" (11,11 mm) |

**Andere Abmessungen auf Anfrage /** OTHER DIMENSIONS ON REQUEST



7/16" HEX SHANK

## TORQ-SET POWER BITS

| Artikel Nr. PART NO. | Schraubengröße SCREW SIZE | Gesamtlänge OVERALL LENGTH | Körperdurchmesser BODY DIAMETER |
|---|---|---|---|
| **TS265-1/4-35** | **1/4** | **3.1/2"** (88,9 mm) | **11/32"** (8,73 mm) |
| **TS265-5/16-35** | **5/16** | **3.1/2"** (88,9 mm) | **3/8"** (9,53 mm) |
| **TS265-3/8-35** | **3/8** | **3.1/2"** (88,9 mm) | **7/16"** (11,11 mm) |
| **TS265-7/16-35** | **7/16** | **3.1/2"** (88,9 mm) | **7/16"** (11,11 mm) |



7/16" HEX SHANK

## TORQ-SET POWER BITS

| Artikel Nr. PART NO. | Schraubengröße SCREW SIZE | Gesamtlänge OVERALL LENGTH | Körperdurchmesser BODY DIAMETER |
|---|---|---|---|
| **TS265-1/4-6** | **1/4** | **6"** (152,4 mm) | **11/32"** (8,73 mm) |
| **TS265-5/16-6** | **5/16** | **6"** (152,4 mm) | **3/8"** (9,53 mm) |
| **TS265-3/8-6** | **3/8** | **6"** (152,4 mm) | **7/16"** (11,11 mm) |
| **TS265-7/16-6** | **7/16** | **6"** (152,4 mm) | **7/16"** (11,11 mm) |

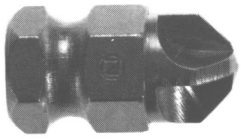

5/8" HEX SHANK

## TORQ-SET POWER BITS

| Artikel Nr. PART NO. | Schraubengröße SCREW SIZE | Gesamtlänge OVERALL LENGTH | Körperdurchmesser BODY DIAMETER |
|---|---|---|---|
| **TS170-1/2** | **1/2** | **1.1/4"** (31,8 mm) | |
| **TS170-9/16** | **9/16** | **1.1/4"** (31,8 mm) | |
| **TS170-5/8** | **5/8** | **1.1/4"** (31,8 mm) | |

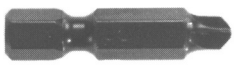

1/4" HEX SHANK

## ACR - TORQ-SET POWER BITS
**WITH REMOVAL-RIPS**

| Artikel Nr. PART NO. | Schraubengröße SCREW SIZE | Gesamtlänge OVERALL LENGTH | Körperdurchmesser BODY DIAMETER |
|---|---|---|---|
| **TS170-6R** | **6** | **1.1/4"** (31,8 mm) | |
| **TS170-8R** | **8** | **1.1/4"** (31,8 mm) | |
| **TS170-10R** | **10** | **1.1/4"** (31,8 mm) | |

**Andere Abmessungen auf Anfrage /** OTHER DIMENSIONS ON REQUEST



1/4" HEX SHANK

## ACR - TORQ-SET POWER BITS
### WITH REMOVAL-RIPS

| Artikel Nr. PART NO. | Schraubengröße SCREW SIZE | Gesamtlänge OVERALL LENGTH | Körperdurchmesser BODY DIAMETER |
|---|---|---|---|
| TS273-6R | 6 | 1.15/16" (49,2 mm) | 3/16" (4,76 mm) |
| TS273-8R | 8 | 1.15/16" (49,2 mm) | 1/4" (6,35 mm) |
| TS273-10R | 10 | 1.15/16" (49,2 mm) | 1/4" (6,35 mm) |



1/4" HEX SHANK

## ACR - TORQ-SET POWER BITS
### WITH REMOVAL-RIPS

| Artikel Nr. PART NO. | Schraubengröße SCREW SIZE | Gesamtlänge OVERALL LENGTH | Körperdurchmesser BODY DIAMETER |
|---|---|---|---|
| TS265-6-35R | 6 | 3.1/2" (88,9 mm) | 3/16" (4,76 mm) |
| TS265-8-35R | 8 | 3.1/2" (88,9 mm) | 1/4" (6,35 mm) |
| TS265-10-35R | 10 | 3.1/2" (88,9 mm) | 1/4" (6,35 mm) |



5/16" HEX SHANK

## ACR - TORQ-SET POWER BITS
### WITH REMOVAL-RIPS / BULLNOSE

| Artikel Nr. PART NO. | Schraubengröße SCREW SIZE | Gesamtlänge OVERALL LENGTH | Körperdurchmesser BODY DIAMETER |
|---|---|---|---|
| TS170-1/4AR | 1/4 | 1.1/4" (31,8 mm) | |
| TS170-5/16AR | 5/16 | 1.1/4" (31,8 mm) | |

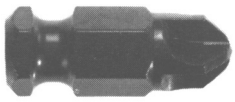

7/16" HEX SHANK

## ACR - TORQ-SET POWER BITS
### WITH REMOVAL-RIPS

| Artikel Nr. PART NO. | Schraubengröße SCREW SIZE | Gesamtlänge OVERALL LENGTH | Körperdurchmesser BODY DIAMETER |
|---|---|---|---|
| TS170-1/4R | 1/4 | 1.1/4" (31,8 mm) | |
| TS170-5/16R | 5/16 | 1.1/4" (31,8 mm) | |

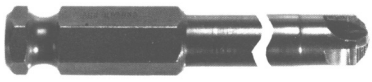

7/16" HEX SHANK

## ACR - TORQ-SET POWER BITS
### WITH REMOVAL-RIPS

| Artikel Nr. PART NO. | Schraubengröße SCREW SIZE | Gesamtlänge OVERALL LENGTH | Körperdurchmesser BODY DIAMETER |
|---|---|---|---|
| TS265-1/4-35R | 1/4 | 3.1/2" (88,9 mm) | 11/32" (8,73 mm) |
| TS265-5/16-35R | 5/16 | 3.1/2" (88,9 mm) | 3/8" (9,53 mm) |

**Andere Abmessungen auf Anfrage /** OTHER DIMENSIONS ON REQUEST

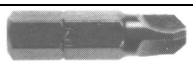

1/4" HEX SHANK

## TRI-WING INSERT BITS

| Artikel Nr. PART NO. | Größe RECESS NO. | Gesamtlänge OVERALL LENGTH | Schraubengröße / SCREW SIZE | |
|---|---|---|---|---|
| | | | TENSION HEAD | SHEAR HEAD |
| TW-0D | 0 | 1" (25,4 mm) | 0-80 | ------- |
| TW-1D | 1 | 1" (25,4 mm) | 2-56 | 4-40 |
| TW-2D | 2 | 1" (25,4 mm) | 4-40 | 6-32 |
| TW-3D | 3 | 1" (25,4 mm) | 6-32 | 8-32 |
| TW-4D | 4 | 1" (25,4 mm) | 8-32 | 10-32 |
| TW-5D | 5 | 1" (25,4 mm) | 10-32 | 1/4-28 |

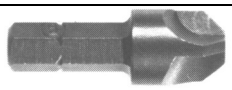

1/4" HEX SHANK

## TRI-WING INSERT BITS
### BULLNOSE

| Artikel Nr. PART NO. | Größe RECESS NO. | Gesamtlänge OVERALL LENGTH | Schraubengröße / SCREW SIZE | |
|---|---|---|---|---|
| | | | TENSION HEAD | SHEAR HEAD |
| TW-6B4D | 6 | 1.1/4" (31,8 mm) | 1/4-28 | 5/16-24 |
| TW-7B4D | 7 | 1.1/4" (31,8 mm) | 5/16-24 | 3/8-24 |
| TW-8B4D | 8 | 1.1/4" (31,8 mm) | 3/8-24 | 7/16-20 |

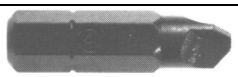

5/16" HEX SHANK

## TRI-WING INSERT BITS

| Artikel Nr. PART NO. | Größe RECESS NO. | Gesamtlänge OVERALL LENGTH | Schraubengröße / SCREW SIZE | |
|---|---|---|---|---|
| | | | TENSION HEAD | SHEAR HEAD |
| TW-4AD | 4 | 1.1/4" (31,8 mm) | 8-32 | 10-32 |
| TW-5AD | 5 | 1.1/4" (31,8 mm) | 10-32 | 1/4-28 |
| TW-6AD | 6 | 1.1/4" (31,8 mm) | 1/4-28 | 5/16-24 |

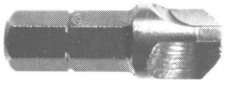

5/16" HEX SHANK

## TRI-WING INSERT BITS
### BULLNOSE

| Artikel Nr. PART NO. | Größe RECESS NO. | Gesamtlänge OVERALL LENGTH | Schraubengröße / SCREW SIZE | |
|---|---|---|---|---|
| | | | TENSION HEAD | SHEAR HEAD |
| TW-6B5D | 6 | 1.1/4" (31,8 mm) | 1/4-28 | 5/16-24 |
| TW-7B5D | 7 | 1.1/4" (31,8 mm) | 5/16-24 | 3/8-24 |
| TW-8B5D | 8 | 1.1/4" (31,8 mm) | 3/8-24 | 7/16-20 |

**Andere Abmessungen auf Anfrage /** OTHER DIMENSIONS ON REQUEST

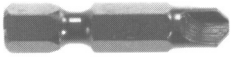

1/4" HEX SHANK

## TRI-WING POWER BITS

| Artikel Nr. PART NO. | Größe RECESS NO. | Gesamtlänge OVERALL LENGTH | Schraubengröße / SCREW SIZE | |
|---|---|---|---|---|
| | | | TENSION HEAD | SHEAR HEAD |
| TW-0 | 0 | 1.1/4" (31,8 mm) | 0-80 | ------- |
| TW-1 | 1 | 1.1/4" (31,8 mm) | 2-56 | 4-40 |
| TW-2 | 2 | 1.1/4" (31,8 mm) | 4-40 | 6-32 |
| TW-3 | 3 | 1.1/4" (31,8 mm) | 6-32 | 8-32 |
| TW-4 | 4 | 1.1/4" (31,8 mm) | 8-32 | 10-32 |
| TW-5 | 5 | 1.1/4" (31,8 mm) | 10-32 | 1/4-28 |



1/4" HEX SHANK

## TRI-WING POWER BITS
BULLNOSE

| Artikel Nr. PART NO. | Größe RECESS NO. | Gesamtlänge OVERALL LENGTH | Schraubengröße / SCREW SIZE | |
|---|---|---|---|---|
| | | | TENSION HEAD | SHEAR HEAD |
| TW-6B4 | 6 | 1.1/4" (31,8 mm) | 1/4-28 | 5/16-24 |
| TW-7B4 | 7 | 1.1/4" (31,8 mm) | 5/16-24 | 3/8-24 |
| TW-8B4 | 8 | 1.1/4" (31,8 mm) | 3/8-24 | 7/16-20 |



5/16" HEX SHANK

## TRI-WING POWER BITS

| Artikel Nr. PART NO. | Größe RECESS NO. | Gesamtlänge OVERALL LENGTH | Schraubengröße / SCREW SIZE | |
|---|---|---|---|---|
| | | | TENSION HEAD | SHEAR HEAD |
| TW-4A | 4 | 1.1/4" (31,8 mm) | 8-32 | 10-32 |
| TW-5A | 5 | 1.1/4" (31,8 mm) | 10-32 | 1/4-28 |



5/16" HEX SHANK

## TRI-WING POWER BITS
BULLNOSE

| Artikel Nr. PART NO. | Größe RECESS NO. | Gesamtlänge OVERALL LENGTH | Schraubengröße / SCREW SIZE | |
|---|---|---|---|---|
| | | | TENSION HEAD | SHEAR HEAD |
| TW-6B5 | 6 | 1.1/4" (31,8 mm) | 1/4-28 | 5/16-24 |
| TW-7B5 | 7 | 1.1/4" (31,8 mm) | 5/16-24 | 3/8-24 |
| TW-8B5 | 8 | 1.1/4" (31,8 mm) | 3/8-24 | 7/16-20 |

**Andere Abmessungen auf Anfrage /** OTHER DIMENSIONS ON REQUEST

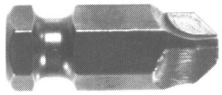

7/16" HEX SHANK

## TRI-WING POWER BITS

| Artikel Nr. PART NO. | Größe RECESS NO. | Gesamtlänge OVERALL LENGTH | Schraubengröße / SCREW SIZE | |
|---|---|---|---|---|
| | | | TENSION HEAD | SHEAR HEAD |
| TW-6 | 6 | 1.1/4" (31,8 mm) | 1/4-28 | 5/16-24 |
| TW-7 | 7 | 1.1/4" (31,8 mm) | 5/16-24 | 3/8-24 |
| TW-8 | 8 | 1.1/4" (31,8 mm) | 3/8-24 | 7/16-20 |

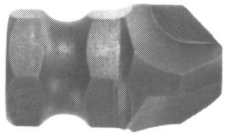

7/16" HEX SHANK

## TRI-WING POWER BITS
### BULLNOSE

| Artikel Nr. PART NO. | Größe RECESS NO. | Gesamtlänge OVERALL LENGTH | Schraubengröße / SCREW SIZE | |
|---|---|---|---|---|
| | | | TENSION HEAD | SHEAR HEAD |
| TW-9B | 9 | 1.1/4" (31,8 mm) | 7/16-20 | 1/2-20 |

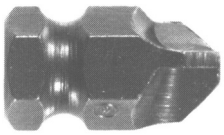

5/8" HEX SHANK

## TRI-WING POWER BITS

| Artikel Nr. PART NO. | Größe RECESS NO. | Gesamtlänge OVERALL LENGTH | Schraubengröße / SCREW SIZE | |
|---|---|---|---|---|
| | | | TENSION HEAD | SHEAR HEAD |
| TW-9 | 9 | 1.1/4" (31,8 mm) | 7/16-20 | 1/2-20 |
| TW-10 | 10 | 1.1/4" (31,8 mm) | 1/2-20 | 9/16-18 |
| TW-11 | 11 | 1.1/4" (31,8 mm) | 9/16-18 | 5/8-18 |

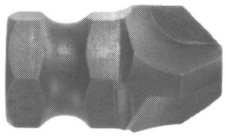

5/8" HEX SHANK

## TRI-WING POWER BITS
### BULLNOSE

| Artikel Nr. PART NO. | Größe RECESS NO. | Gesamtlänge OVERALL LENGTH | Schraubengröße / SCREW SIZE | |
|---|---|---|---|---|
| | | | TENSION HEAD | SHEAR HEAD |
| TW-12B | 12 | 1.1/4" (31,8 mm) | 5/8-18 | 3/4-16 |
| TW-13B | 13 | 2.1/2" (63,5 mm) | 3/4-16 | 7/8-14 |

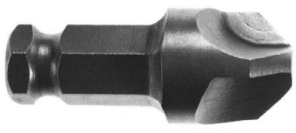

3/4" HEX SHANK

## TRI-WING POWER BITS
### BULLNOSE

| Artikel Nr. PART NO. | Größe RECESS NO. | Gesamtlänge OVERALL LENGTH | Schraubengröße / SCREW SIZE | |
|---|---|---|---|---|
| | | | TENSION HEAD | SHEAR HEAD |
| TW-14B | 14 | 3" (76,2 mm) | 7/8-14 | 1-12 |
| TW-15B | 15 | 3" (76,2 mm) | 1-12 | |

**Andere Abmessungen auf Anfrage /** OTHER DIMENSIONS ON REQUEST

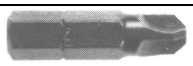

1/4" HEX SHANK

## ACR - TRI-WING INSERT BITS
### WITH REMOVAL-RIPS

| Artikel Nr. PART NO. | Größe RECESS NO. | Gesamtlänge OVERALL LENGTH | Schraubengröße / SCREW SIZE | |
|---|---|---|---|---|
| | | | TENSION HEAD | SHEAR HEAD |
| TW-3DR | 3 | 1" (25,4 mm) | 6-32 | 8-32 |
| TW-4DR | 4 | 1" (25,4 mm) | 8-32 | 10-32 |
| TW-5DR | 5 | 1" (25,4 mm) | 10-32 | 1/4-28 |

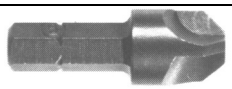

1/4" HEX SHANK

## ACR - TRI-WING INSERT BITS
### WITH REMOVAL-RIPS / BULLNOSE

| Artikel Nr. PART NO. | Größe RECESS NO. | Gesamtlänge OVERALL LENGTH | Schraubengröße / SCREW SIZE | |
|---|---|---|---|---|
| | | | TENSION HEAD | SHEAR HEAD |
| TW-6B4DR | 6 | 1.1/4" (31,8 mm) | 1/4-28 | 5/16-24 |

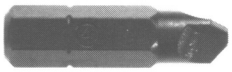

5/16" HEX SHANK

## ACR - TRI-WING INSERT BITS
### WITH REMOVAL-RIPS

| Artikel Nr. PART NO. | Größe RECESS NO. | Gesamtlänge OVERALL LENGTH | Schraubengröße / SCREW SIZE | |
|---|---|---|---|---|
| | | | TENSION HEAD | SHEAR HEAD |
| TW-4ADR | 4 | 1.1/4" (31,8 mm) | 8-32 | 10-32 |
| TW-5ADR | 5 | 1.1/4" (31,8 mm) | 10-32 | 1/4-28 |
| TW-6ADR | 6 | 1.1/4" (31,8 mm) | 1/4-28 | 5/16-24 |



1/4" HEX SHANK

## ACR - TRI-WING POWER BITS
### WITH REMOVAL-RIPS

| Artikel Nr. PART NO. | Größe RECESS NO. | Gesamtlänge OVERALL LENGTH | Schraubengröße / SCREW SIZE | |
|---|---|---|---|---|
| | | | TENSION HEAD | SHEAR HEAD |
| TW-3R | 3 | 1.1/4" (31,8 mm) | 6-32 | 8-32 |
| TW-4R | 4 | 1.1/4" (31,8 mm) | 8-32 | 10-32 |
| TW-5R | 5 | 1.1/4" (31,8 mm) | 10-32 | 1/4-28 |



1/4" HEX SHANK

## ACR - TRI-WING POWER BITS
### WITH REMOVAL-RIPS / BULLNOSE

| Artikel Nr. PART NO. | Größe RECESS NO. | Gesamtlänge OVERALL LENGTH | Schraubengröße / SCREW SIZE | |
|---|---|---|---|---|
| | | | TENSION HEAD | SHEAR HEAD |
| TW-6B4R | 6 | 1.1/4" (31,8 mm) | 1/4-28 | 5/16-24 |

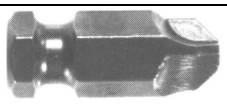

7/16" HEX SHANK

## TRI-WING POWER BITS
### WITH REMOVAL-RIPS

| Artikel Nr. PART NO. | Größe RECESS NO. | Gesamtlänge OVERALL LENGTH | Schraubengröße / SCREW SIZE | |
|---|---|---|---|---|
| | | | TENSION HEAD | SHEAR HEAD |
| TW-6R | 6 | 1.1/4" (31,8 mm) | 1/4-28 | 5/16-24 |
| TW-7R | 7 | 1.1/4" (31,8 mm) | 5/16-24 | 3/8-24 |

**Andere Abmessungen auf Anfrage /** OTHER DIMENSIONS ON REQUEST

# INSERT BIT HOLDERS
## HEX SHANK TO FEMALE HEX

MAGNETIC HOLDER RETAINING RING DETAIL

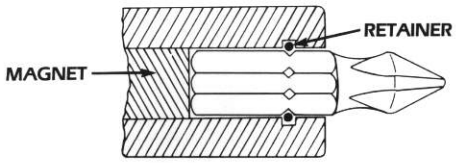


TYPE 1

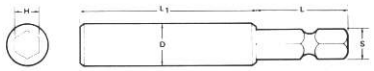

TYPE 2

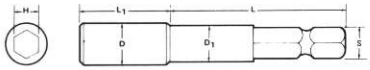

TYPE 3

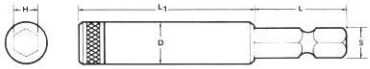

| | ZEPHYR PART NO. | S HEX | H | D | $D_1$ | L | $L_1$ |
|---|---|---|---|---|---|---|---|
| **magnetic type 1** | ZM10 | 1/4" | 1/4" | 7/16" | — | 1" | 1 7/8" |
| | ZM18 | 7/16" | 1/4" | 1/2" | — | 1 1/4" | 1 7/8" |
| | ZM19 | 5/16" | 1/4" | 7/16" | — | 1 1/8" | 1 7/8" |
| | ZM20 | 5/16" | 5/16" | 1/2" | — | 1 1/8" | 1 31/32" |
| | ZM28 | 7/16" | 5/16" | 9/16" | — | 1 5/16" | 2 1/16" |
| | ZM39 | 1/4" | 1/4" | 7/16" | — | 1" | 1 1/4" |
| | ZM47 | 1/4" | 5/16" | 1/2" | — | 1 1/16" | 2 1/8" |
| | ZM59 | 1/4" | 1/4" | 3/8" | — | 1" | 1 7/8" |
| **magnetic type 2** | ZM10-L 4 | 1/4" | 1/4" | 7/16" | 5/16" | 2 1/8" | 1 7/8" |
| | ZM10-L 6 | 1/4" | 1/4" | 7/16" | 5/16" | 4 1/8" | 1 7/8" |
| | ZM10-L 8 | 1/4" | 1/4" | 7/16" | 5/16" | 6 1/8" | 1 7/8" |
| | ZM10-L 10 | 1/4" | 1/4" | 7/16" | 5/16" | 8 1/8" | 1 7/8" |
| | ZM35 | 1/4" | 1/4" | 7/16" | 3/8" | 1" | 1 7/8" |
| | ZM38 | 1/4" | 1/4" | 7/16" | 3/8" | 1 1/8" | 1 7/8" |
| **magnetic type 3** | ZM60 | 1/4" | 1/4" | 7/16" | — | 1" | 2 3/32" |
| | ZM61 | 1/4" | 1/4" | 7/16" | 3/8" | 1" | 2 3/32" |
| | ZM62 | 1/4" | 1/4" | 7/16" | — | 1" | 1 1/4" |
| **non-magnetic type 1** | ZNM18 | 7/16" | 1/4" | 1/2" | 7/16" | 1 1/4" | 1 1/2" |
| | ZNM19 | 5/16" | 1/4" | 7/16" | — | 1 1/8" | 3/4" |
| | ZNM20 | 5/16" | 5/16" | 1/2" | — | 1 1/8" | 1 3/8" |
| | ZNM28 | 7/16" | 5/16" | 9/16" | — | 1 1/4" | 1 1/2" |
| **non-magnetic type 2** | ZNM10 | 1/4" | 1/4" | 7/16" | 9/32" | 1 1/8" | 5/8" |
| | ZNM10L4 | 1/4" | 1/4" | 7/16" | 5/16" | 3" | 1" |
| | ZNM10L6 | 1/4" | 1/4" | 7/16" | 5/16" | 5" | 1" |

# INSERT BIT HOLDERS
## THREADED DRIVE TO FEMALE HEX

| | ZEPHYR PART NO. | T | H | D | OVERALL LENGTH | TYPE |
|---|---|---|---|---|---|---|
| **magnetic** | ZM45 | 3/8-24 R.H. | 1/4" | 3/8" | 1 7/8" | Replaceable Cap |
| | ZM41 | 3/8-24 R.H. | 1/4" | 3/8" | 1 7/8" | Solid Body |

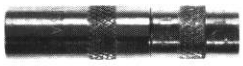

# INSERT BIT HOLDERS
## FEMALE SQUARE DRIVE TO FEMALE HEX OR SQUARE

TYPE A

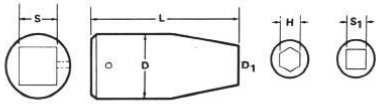


TAPERED

TYPE B

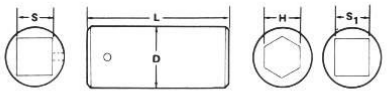


STRAIGHT

TYPE C

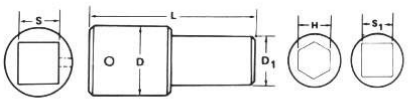


SHOULDER

| ZEPHYR PART NO. | DRIVE S | SQUARE $S_1$ | HEX H | D | $D_1$ | L | |
|---|---|---|---|---|---|---|---|
| ZNM25 | 3/8" SQ. | — | 1/4" | 11/16" | — | 1 1/4" | non-magnetic type A |
| ZNM26 | 3/8" SQ. | — | 5/16" | 11/16" | — | 1 1/2" | |
| ZNM27 | 1/2" SQ. | — | 5/16" | 15/16" | — | 1 1/2" | |
| ZNM33 | 3/8" SQ. | 5/16" | — | 11/16" | 5/8" | 1 1/2" | |
| ZNM34 | 1/2" SQ. | 5/16" | — | 1" | 5/8" | 1 3/4" | |
| ZNM37 | 1/2" SQ. | — | 1/4" | 15/16" | — | 1 1/2" | |
| ZNM23 | 1/4" | — | 1/4" | 7/16" | — | 7/8" | non-magnetic type B |
| ZM23 | 1/4" SQ. | — | 1/4" | 9/16" | 7/16" | 2 1/16" | magnetic type C |
| ZM25 | 3/8" SQ. | — | 1/4" | 11/16" | 7/16" | 2 1/16" | |
| ZM26 | 3/8" SQ. | — | 5/16" | 11/16" | 1/2" | 2 3/4" | |
| ZM37 | 1/2" SQ. | — | 1/4" | 15/16" | 7/16" | 2 3/4" | |



# INSERT BIT HOLDERS
## YANKEE DRIVE TO FEMALE HEX

| ZEPHYR PART NO. | S | H | D | $L_1$ | L | |
|---|---|---|---|---|---|---|
| ZM21 | 9/32" | 1/4" | 7/16" | 1 7/8" | 1 1/2" | magnetic |
| ZM22 | 5/16" | 1/4" | 7/16" | 1 7/8" | 1 1/2" | |
| ZM30 | 7/32" | 1/4" | 7/16" | 1 7/8" | 1 1/2" | |
| ZNM21 | 9/32" | 1/4" | 7/16" | 3/4" | 1 1/2" | non-magnetic |
| ZNM22 | 5/16" | 1/4" | 7/16" | 3/4" | 1 1/2" | |
| ZNM30 | 7/32" | 1/4" | 7/16" | 3/4" | 1 1/2" | |



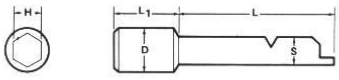




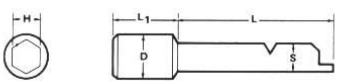

# NUT SETTERS
## HEX SHANK DRIVE TO FEMALE HEX

TYPE 1

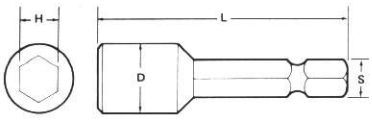


TYPE 2

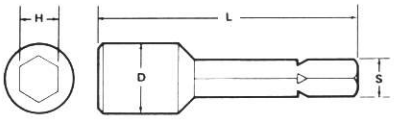


| | ZEPHYR PART NO. | S HEX | H | D | L |
|---|---|---|---|---|---|
| **magnetic type 1 power** | Z10MSH-1/4 | 1/4" | 1/4" | 7/16" | 1 11/16" |
| | Z10MSH-5/16 | 1/4" | 5/16" | 1/2" | 1 11/16" |
| | Z10MSH-3/8 | 1/4" | 3/8" | 9/16" | 1 11/16" |
| | Z10MSHL-1/4 | 1/4" | 1/4" | 7/16" | 2 9/16" |
| | Z10MSHL-5/16 | 1/4" | 5/16" | 1/2" | 2 9/16" |
| | Z10MSHL-3/8 | 1/4" | 3/8" | 9/16" | 2 9/16" |
| **magnetic type 2 insert** | Z10MSHS-1/4 | 1/4" | 1/4" | 7/16" | 1 1/8" |
| | Z10MSHS-5/16 | 1/4" | 5/16" | 1/2" | 1 1/8" |
| | Z10MSHS-3/8 | 1/4" | 3/8" | 1/2" | 1 1/8" |
| **non-magnetic type 1 power** | Z10SH-1/4 | 1/4" | 1/4" | 7/16" | 1 11/16" |
| | Z10SH-5/16 | 1/4" | 5/16" | 1/2" | 1 11/16" |
| | Z10SH-3/8 | 1/4" | 3/8" | 9/16" | 1 11/16" |
| | Z10SHL-1/4 | 1/4" | 1/4" | 7/16" | 2 9/16" |
| | Z10SHL-5/16 | 1/4" | 5/16" | 1/2" | 2 9/16" |
| | Z10SHL-3/8 | 1/4" | 3/8" | 9/16" | 2 9/16" |

# SQUARE DRIVE SOCKETS
## FOR HEX HEAD SCREWS OR NUTS

TYPE A



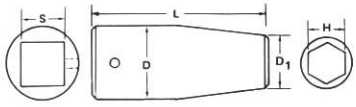


TAPERED

TYPE B

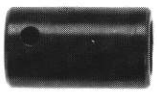

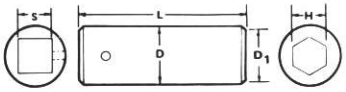


STRAIGHT

TYPE C



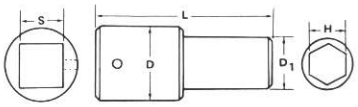


SHOULDER

## 1/4" SQUARE DRIVE SOCKETS

| ZEPHYR PART NO. | H | D | $D_1$ | L | S | TYPE | |
|---|---|---|---|---|---|---|---|
| Z48MST-1/4 | 1/4" | 1/2" | 3/8" | 7/8" | 1/4" | A | **magnetic** |
| Z48MS-1/4 | 1/4" | 1/2" | 7/16" | 7/8" | 1/4" | C | |
| Z48MS-5/16 | 5/16" | 1/2" | 1/2" | 7/8" | 1/4" | B | |
| Z48MST-5/16 | 5/16" | 1/2" | 7/16" | 7/8" | 1/4" | A | |
| Z48MS-3/8 | 3/8" | 9/16" | 9/16" | 1" | 1/4" | B | |
| Z48MS-7/16 | 7/16" | 3/4" | 3/4" | 1" | 1/4" | B | |
| Z48S-1/4 | 1/4" | 1/2" | 7/16" | 7/8" | 1/4" | C | **non-magnetic** |
| Z48ST-1/4 | 1/4" | 1/2" | 3/8" | 7/8" | 1/4" | A | |
| Z48S-5/16 | 5/16" | 1/2" | 1/2" | 7/8" | 1/4" | B | |
| Z48S-3/8 | 3/8" | 9/16" | 9/16" | 1" | 1/4" | B | |
| Z48S-7/16 | 7/16" | 3/4" | 3/4" | 1" | 1/4" | B | |
| Z48STD-1/4 | 1/4" | 1/2" | 3/8" | 7/8" | 1/4" | A | **double hex** |

# EXTENSIONS
## HEX SHANK DRIVE TO MALE SQUARE

| | ZEPHYR PART NO. | S | H | L | P |
|---|---|---|---|---|---|
| **1/4" hex to 1/4" square** | Z10SH- 1 3/8 | 1/4" | 1/4" | 1 3/8" | PIN |
| | Z10SH- 2 | 1/4" | 1/4" | 2" | PIN |
| | Z10SH- 3 | 1/4" | 1/4" | 3" | PIN |
| | Z10SH- 4 | 1/4" | 1/4" | 4" | PIN |
| | Z10SH- 5 | 1/4" | 1/4" | 5" | PIN |
| | Z10SH- 6 | 1/4" | 1/4" | 6" | PIN |
| | Z10SH- 8 | 1/4" | 1/4" | 8" | PIN |
| | Z10SH-10 | 1/4" | 1/4" | 10" | PIN |
| | Z10SH-12 | 1/4" | 1/4" | 12" | PIN |
| **1/4" hex to 3/8" square** | Z10SH-3/8-2 | 3/8" | 1/4" | 2" | PIN |
| | Z10SH-3/8-3 | 3/8" | 1/4" | 3" | PIN |
| | Z10SH-3/8-4 | 3/8" | 1/4" | 4" | PIN |
| | Z10SH-3/8-6 | 3/8" | 1/4" | 6" | PIN |
| | Z10SH-3/8-8 | 3/8" | 1/4" | 8" | PIN |
| **7/16" hex to 3/8" square** | Z09SH-3/8 | 3/8" | 7/16" | 1 3/4" | PIN |
| | Z09SH-3/8- 2 | 3/8" | 7/16" | 2" | PIN |
| | Z09SH-3/8- 3 | 3/8" | 7/16" | 3" | PIN |
| | Z09SH-3/8- 4 | 3/8" | 7/16" | 4" | PIN |
| | Z09SH-3/8- 5 | 3/8" | 7/16" | 5" | PIN |
| | Z09SH-3/8- 6 | 3/8" | 7/16" | 6" | PIN |
| | Z09SH-3/8- 8 | 3/8" | 7/16" | 8" | PIN |
| | Z09SH-3/8-10 | 3/8" | 7/16" | 10" | PIN |
| | Z09SH-3/8-12 | 3/8" | 7/16" | 12" | PIN |
| | Z09SH-3/8-15 | 3/8" | 7/16" | 15" | PIN |
| **7/16" hex to 1/2" square** | Z09SH-1/2 | 1/2" | 7/16" | 2 1/8" | PIN |
| | Z09SH-1/2- 3 | 1/2" | 7/16" | 3" | PIN |
| | Z09SH-1/2- 4 | 1/2" | 7/16" | 4" | PIN |
| | Z09SH-1/2- 5 | 1/2" | 7/16" | 5" | PIN |
| | Z09SH-1/2- 6 | 1/2" | 7/16" | 6" | PIN |
| | Z09SH-1/2- 8 | 1/2" | 7/16" | 8" | PIN |

# EXTENSIONS
## HEX SHANK TO MALE HEX (Reversible Sockets)

| | ZEPHYR PART NO. | H | $H_1$ | L | P |
|---|---|---|---|---|---|
| **1/4" HEX TO 1/4" HEX** | Z10SHR-2 | 1/4" | 1/4" | 2" | PIN |
| | Z10SHR-3 | 1/4" | 1/4" | 3" | PIN |
| | Z10SHR-4 | 1/4" | 1/4" | 4" | PIN |

# HAND BIT HOLDERS
## COMBINATION HOLDER WITH BIT STORAGE

| BIT SIZE | D | $L_1$ | $L_2$ | SHANK MATERIAL | ZEPHYR PART NO. | |
|---|---|---|---|---|---|---|
| 1/4" HEX | 3/8" | 7 13/16" | 3 3/4" | ALUMINUM | H104MA | magnetic |
| 1/4" HEX | 3/8" | 7 13/16" | 3 3/4" | S. STEEL | H104MS | |
| 5/16" HEX | 7/16" | 7 13/16" | 3 3/4" | ALUMINUM | H105MA | |
| 5/16" HEX | 7/16" | 7 13/16" | 3 3/4" | S. STEEL | H105MS | |

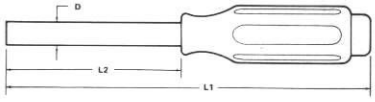


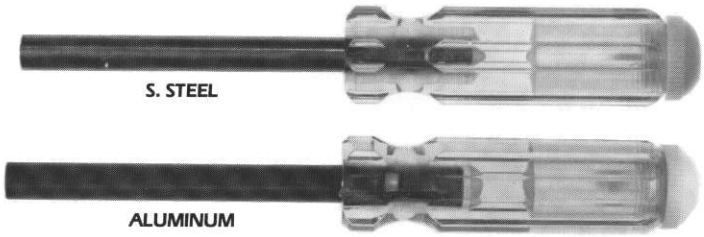


| | | | | | | |
|---|---|---|---|---|---|---|
| 1/4" HEX | 7/16" | 7 13/16" | 3 3/4" | STEEL | H104NM | non-magnetic |
| 5/16" HEX | 1/2" | 7 13/16" | 3 3/4" | STEEL | H105NM | |

Note: Bit storage handle will accommodate up to four 1/4" Hex 1" insert bits.

# HAND BIT HOLDERS
## STUBBY HOLDER WITH SOLID HANDLE

| BIT SIZE | D | $L_1$ | $L_2$ | SHANK MATERIAL | ZEPHYR PART NO. | |
|---|---|---|---|---|---|---|
| 1/4" HEX | 3/8" | 3 5/8" | 1 5/8" | S. STEEL | SH104M | magnetic |

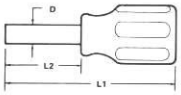




| | | | | | | |
|---|---|---|---|---|---|---|
| 1/4" HEX | 7/16" | 3 5/8" | 1 5/8" | STEEL | SH104NM | non-magnetic |

# HAND BIT HOLDERS
## SOLID HANDLE

| BIT SIZE | D | $L_1$ | $L_2$ | SHANK MATERIAL | ZEPHYR PART NO. | |
|---|---|---|---|---|---|---|
| 1/4" HEX | 3/8" | 8 1/4" | 3 3/4" | ALUMINUM | H106MA | magnetic |
| 1/4" HEX | 3/8" | 8 1/4" | 3 3/4" | S. STEEL | H106MS | |
| 5/16" HEX | 7/16" | 8 1/4" | 3 3/4" | ALUMINUM | H107MA | |
| 5/16" HEX | 7/16" | 8 1/4" | 3 3/4" | S. STEEL | H107MS | |

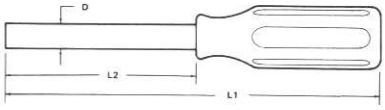


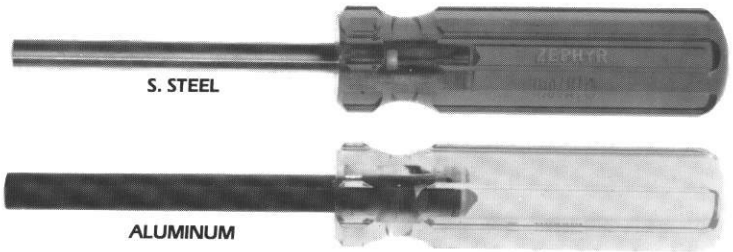


| | | | | | | |
|---|---|---|---|---|---|---|
| 1/4" HEX | 7/16" | 8 1/4" | 3 3/4" | STEEL | H106NM | non-magnetic |
| 5/16" HEX | 1/2" | 8 1/4" | 3 3/4" | STEEL | H107NM | |

# HAND SCREWDRIVERS
## ACR®-PHILLIPS

| POINT SIZE | D | $L_1$ | $L_2$ | ZEPHYR PART NO. INSTALLATION | REMOVAL |
|---|---|---|---|---|---|
| 1 | 1/4" HEX | 7 1/16" | 3 1/8" | PL-101-ACR-I | PL-101-ACR-R |
| 2 | 1/4" HEX | 8 1/2" | 4" | PL-102-ACR-I | PL-102-ACR-R |
| 3 | 5/16" HEX | 10 1/2" | 6" | PL-103-ACR-I | PL-103-ACR-R |

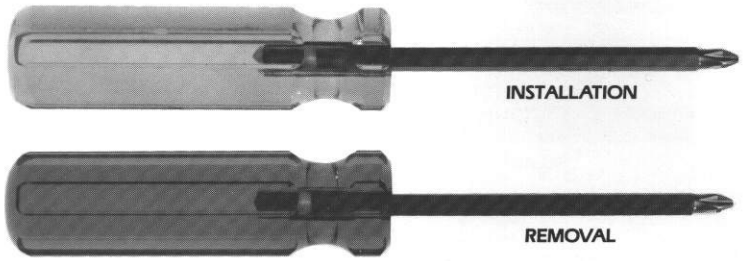


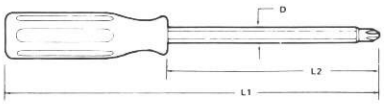


# HAND SCREWDRIVERS
## TORQ-SET®

| POINT SIZE | D | $L_1$ | $L_2$ | ZEPHYR PART NO. |
|---|---|---|---|---|
| 0 | 1/4" HEX | 3" | 1-1/4" | TS201P-0 |
| 1 | 1/4" HEX | 3" | 1-1/4" | TS201P-1 |
| 2 | 1/4" HEX | 7 1/16" | 3-1/8" | TS201P-2 |
| 3 | 1/4" HEX | 7 1/16" | 3-1/8" | TS201P-3 |
| 4 | 1/4" HEX | 7 1/16" | 3-1/8" | TS201P-4 |
| 5 | 1/4" HEX | 7 1/16" | 3-1/8" | TS201P-5 |
| 6 | 1/4" HEX | 7 5/16" | 4" | TS201P-6 |
| 8 | 1/4" HEX | 7 5/16" | 4" | TS201P-8 |
| 10 | 1/4" HEX | 7 5/16" | 4" | TS201P-10 |
| 1/4 | 5/16" HEX | 10 1/2" | 6" | TS201P-1/4 |
| 5/16 | 3/8" HEX | 12 1/2" | 8" | TS201P-5/16 |
| 3/8 | 3/8" HEX | 12 1/2" | 8" | TS201P-3/8 |

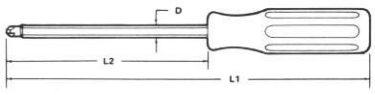




TORQ-SET® is a registered trademark of Phillips Screw Company.

# HAND SCREWDRIVERS
## TRI-WING®

| POINT SIZE | D | $L_1$ | $L_2$ | ZEPHYR PART NO. |
|---|---|---|---|---|
| 0 | 1/4" | 3" | 1-1/4" | TW301P-0 |
| 1 | 1/4" | 3" | 1-1/4" | TW301P-1 |
| 2 | 1/4" | 7 1/16" | 3-1/8" | TW301P-2 |
| 3 | 1/4" | 7 5/16" | 4" | TW301P-3 |
| 4 | 1/4" | 7 5/16" | 4" | TW301P-4 |
| 5 | 1/4" | 7 5/16" | 4" | TW301P-5 |
| 6 | 3/8" | 10 1/2" | 6" | TW301P-6 |
| 7 | 3/8" | 12 1/2" | 8" | TW301P-7 |

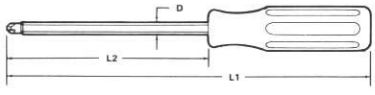


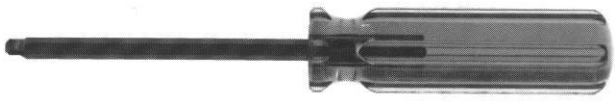

# Z-Hex Ball L-WRENCH SET

Helps get to those hard to reach areas and provides
the torque to do the job. The new set includes 12 sizes:

**.050, 1/16", 5/64", 3/32", 7/64", 1/8", 9/64",
5/32", 3/16", 7/32", 1/4" and 5/16"**




ZHBL-1200

# Bit-Knarren

BIT-RATCHET

**Mit magnetischen Innen-Sechskant-Aufnahmen zum Festhalten der Bits; rechts/links umschaltbar; Knarrenköpfe um 25° abgewinkelt; US-Alloy-Steel, verchromt, poliert:**
BIT-RATCHETS WITH MAGNETIC FEMALE-HEX-DRIVE; REVERSIBLE;
25° BENT RATCHET HEADS; US-ALLOY-STEEL, CHROMATED AND POLISHED:

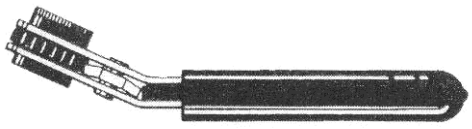

**6722-BK**

**Mini-Bitknarre, einseitig,
für Bits mit 1/4" Sechskant,
Länge 110 mm, Gewicht 65 g**

MINI-BIT-RATCHET, SINGLE SIDE
FOR BITS WITH 1/4" HEX,
LENGTH 4.3/8", WEIGHT 0.14 LBS.

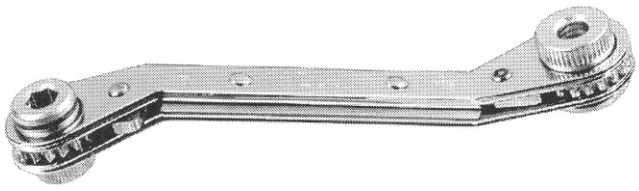

**6720**

**Combi-Bitknarre,
für Bits mit 1/4" + 5/16" Sechskant
Länge 140 mm, Gewicht 105 g**

COMBI-BIT-RATCHET
FOR BITS WITH 1/4" + 5/16" HEX
LENGTH 5.1/2", WEIGHT 0.23 LBS.

## **Schrauben-Löser /** SCREW REMOVAL TOOL

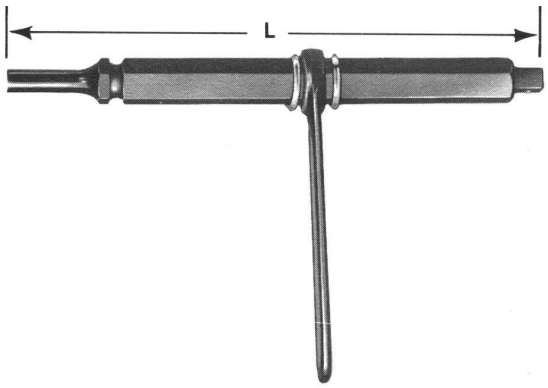


Zum Lösen von Schrauben durch Verwendung mit einem Niethammer

**FOR REMOVING SCREWS WITH RIVET HAMMER**

| **Artikel-Nr.** PART NO. | **Länge (L)** LENGTH (L) | **Vierkant-Abtrieb** SQUARE DRIVE | **Schaft-Type und Abmessung** SHANK TYPE AND DIAMETER |
|---|---|---|---|
| **540** | 9" **(229 mm)** | 3/8" **(9,53 mm)** | PARKER TAPER .401 SHANK **(10,2 mm Standard)** |
| **540S** | 4.1/2" **(114 mm)** | 3/8" **(9,53 mm)** | PARKER TAPER .401 SHANK **(10,2 mm Standard)** |

## **Schraubenausdreher, schwere Ausführung** HEAVY DUTY SCREW REMOVAL TOOL

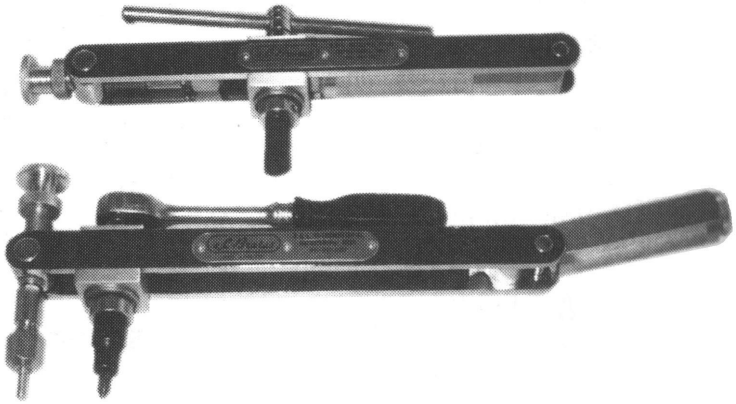

*** T-Griff, Ratsche, Bithalter, Bits & Schraube sind nicht enthalten!**

* T-HANDLE, RATCHET, BITHOLDER BITS & SCREW ARE NOT INCLUDED

| **Artikel-Nr.** / PART NO. | **Beschreibung /** DESCRIPTION |
|---|---|
| **5-2869** | **Für Schrauben von 4 mm bis 6,35 mm** FOR SCREWS FROM #8 TO 1/4" |
| **7-2868** | **Für Schrauben von 6,35 mm bis 9,53 mm** FOR SCREWS FROM 1/4" TO 3/8" |

## **Schraubenausdreher /** SCREW EXTRACTOR



Aus hochwertigem Chrom-Vanadium-Stahl, gehärtet, 54-56 HRc Gewinde gerollt, Schaft geschliffen, zum Entfernen abgebrochener Schrauben, Gewindebolzen und Rohrenden.

**Arbeitsweise:**
Mit dem Spiralbohrer der empfohlenen Größe zentrisch ein Loch in das zu entfernende Stück bohren, den Schraubenausdreher einsetzen und bis zum Lösen des Reststückes in Linksrichtung drehen.

***1** = maximales Anwenderdrehmoment in Nm bei einem Prüfelement mit einer Material-festigkeit von 1147 N/mm² und einer Härte von 35 HRc. Die Belastung ist stetig steigend, nicht schwingend oder schlagartig, bis zum höchst-zulässigen Drehmoment aufzubringen.

From high-quality chrom vanadium steel, heat treated, 54-56 HRc rolled thread, shank, polished, to remove broken screws, stups and pipes.

**Mode of operation:**
Drill hole with the recommended twist drill into the stud's center, and turn the extractor into hole counterclockwise until stud removed.

***1** = the maximum torque which should not be exceeded, measured on a screw with a tensile strength of 1147 N/mm² and a hardness of 35 HRc. The torque should be applied with steady pressure and should not be applied suddenly or spasmodic up to the maximum torque.

| Art. Nummer Part Number | Schraubengröße Screw Size | Bohrdurchmesser Drilling Diameter | Bohrtiefe Drill Depth | Länge Length | Vierkant Ø Square Ø | ***1** Nm |
|---|---|---|---|---|---|---|
| **4.501.0** | M4 | 1,8 mm | 7 mm | 50 mm | 2,7 mm | 2,2 |
| **4.502.0** | M5 - M7 | 3,2 mm | 10 mm | 57 mm | 3,8 mm | 10 |
| **4.503.0** | M8 - M10 | 4,5 mm | 13 mm | 64 mm | 4,9 mm | 23 |
| **4.504.0** | M11 - M14 | 6,5 mm | 16 mm | 71 mm | 7,0 mm | 70 |
| **4.505.0** | M16 - M18 | 8,5 mm | 21 mm | 79 mm | 9,0 mm | 150 |

# Reifenprofil-Tiefenmesslehre
## TYRE TREAD DEPTH GAUGE

Messbereich / DEPTH RANGE : 0 - 26 mm




**TDG16C01**

# Ventil-Ausdreher
## VALVE CORE REMOVAL TOOL





**Valve Size: Small**

**HSL 12344**

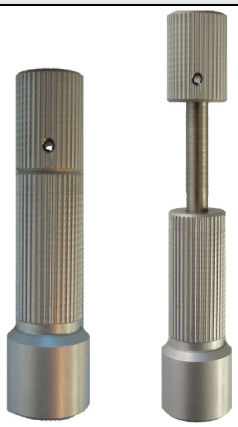



**Valve Size: Large**

**HSL 12345**

### Aircraft Tyre deflation

Safety is always the prime requirement and with aircraft tyre deflation there are two main risk areas.

**Firstly** the causing of embolisms and embedding of debris into the skin carried by escaping high pressure gas.

**Secondly** the subsequent possible damage by the valve being carried away by the exhausting gas and becoming fodder if not found.

**Solution:** Both problems have been overcome. The exhaust route has been directed away from the operator and secondly the removed valve is retained within the deflator body until the deflator is removed from the valve.

Now that dry nitrogen has replaced air as the inflation medium, ice formation is also no longer a hazard.

# Stahl-Lineale - flexibel
## STEEL-RULES - FLEXIBLE

**verchromt, satiniert** / SATIN CHROME FINISH

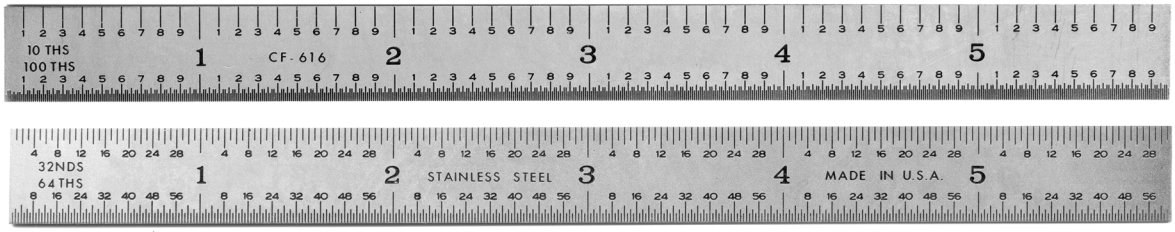


**CF-616**

| Länge | Teilung Seite 1 | Teilung Seite 2 | Schriftfarbe | Weite |
|---|---|---|---|---|
| LENGTH | GRADUATION SIDE 1 | GRADUATION SIDE 2 | LETTER COLOR | Width |
| **6 Zoll** | **1/32" + 1/64"** | **1/10" + 1/100"** | **schwarz** | **11,9 mm** |
| **6 INCH** | **32nds + 64ths** | **10ths + 100ths** | **black** | **15/32"** |

# **Inspektions-Spiegel** / INSPECTION MIRRORS

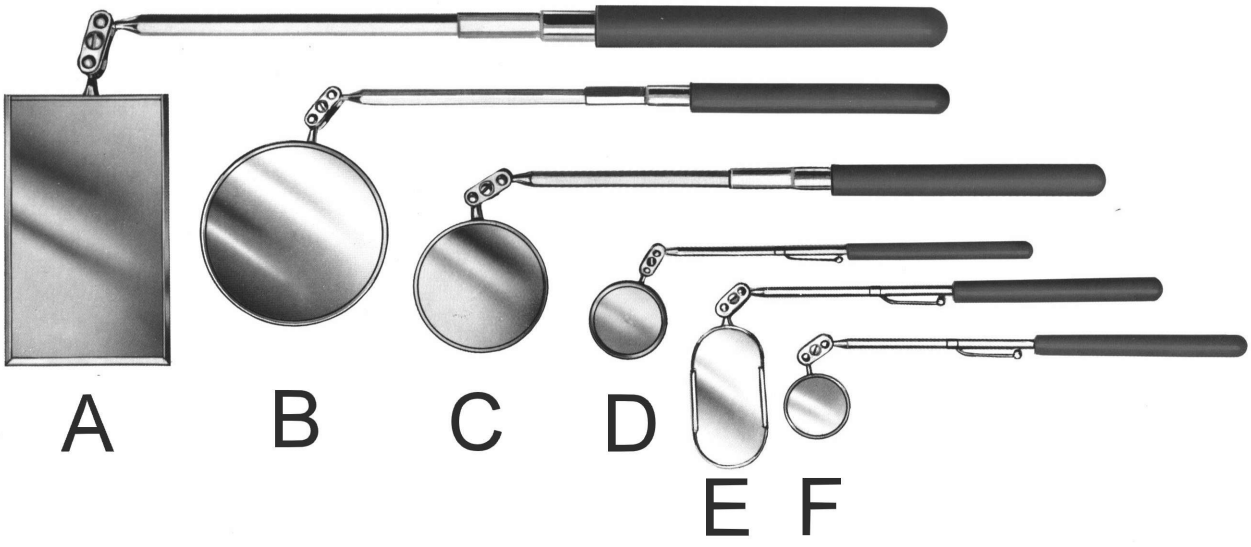


| | Artikel-Nr.<br>PART-NO. | Ausführung<br>TYPE | Spiegelgröße<br>MIRROR SIZE | Länge<br>LENGTH | Ersatz-Spiegelkopf<br>REPLACEMENT HEAD ASSY |
|---|---|---|---|---|---|
| **A** | **70-929** | **Rechteckig**<br>RECTANGULAR | **54 X 89 mm**<br>2.1/8" x 3.1/2" | **286 - 394 mm**<br>11.1/4" x 15.1/2" | - |
| **B** | **S-2** | **Rund**<br>CIRCULAR | **83 mm**<br>3.1/4" | **280 - 381 mm**<br>11" x 15" | **S-2HD** |
| **C** | **70-925** | **Rund**<br>CIRCULAR | **57 mm**<br>2.1/4" | **254 - 356 mm**<br>10" x 14" | **PO-252** |
| **D** | **70-927** | **Rund**<br>CIRCULAR | **32 mm**<br>1.1/4" | **203 mm**<br>8" | **PO-253** |
| **E** | **70-923** | **Oval**<br>OVAL | **25 X 51 mm**<br>1" x 2" | **216 mm**<br>8.1/2" | **S34563** |
| **F** | **70-921** | **Rund**<br>CIRCULAR | **22 mm**<br>7/8" | **191 mm**<br>7.1/2" | **A-2HD** |

# **Magnet-Heber** / MAGNETIC RETRIEVING TOOLS

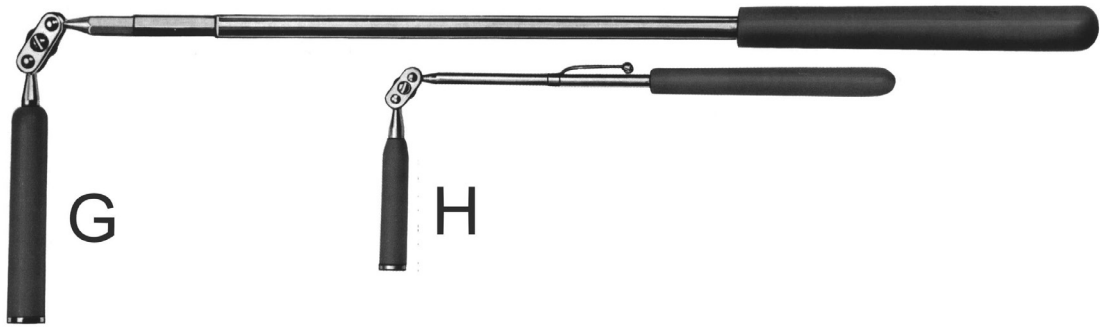


| | Artikel-Nr.<br>PART-NO. | Länge<br>LENGTH | | | Artikel-Nr.<br>PART-NO. | Länge<br>LENGTH |
|---|---|---|---|---|---|---|
| **G** | **70-933** | **425 - 679 mm**<br>16.3/4" x 26.3/4" | | **H** | **70-935** | **216 mm**<br>8.1/2" |

# SAFETY WIRE TWISTER

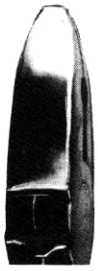
Tapered


Square


Diagonal


Cushion Throat


Deep Reach

**Descriptions:**

**Cushion Throat** — Form fit plastic in the jaws holds the cut ends of the wire and prevents them from flying into assembly.

**Automatic** — Twister mechanism retracts automatically making operation simpler and much faster.

**Right Hand Twist** — Safetytwist plier rotates clockwise when twister mechanism is pulled.

**Left Hand Twist** — Safetytwist plier rotates counter clockwise when twister mechanism is pulled.

**Deep Reach** — Twister mechanism with two extensions attached (overall 19″) provides access to deep safetywiring jobs.

## REVERSIBLE - AUTOMATIC RETURN

NEW

**TigerWave®**
- Unique jaw design eliminates cuts and nicks in wire
- Cushion throat holds clipped wire -- No F.O.D.
- Reversible action for Left and Right twists
- Auto spring return


26W

| Model | Description* |
|---|---|
| 25W | 6" TigerWave |
| 26W | 9" TigerWave |
| **Standard-Jaw Reversible with Diagonal Nose** | |
| 45W | 6" NSN 5120-01-429-8147 |
| 41W | 9" NSN 5120-01-429-8146 |
| 42W | 12" NSN 5120-01-429-8153 |

## AUTOMATIC RETURN


1W393

| | |
|---|---|
| 9WS | 6" Tapered Nose |
| 11WS | 6" Diagonal Nose |
| 1W393 | 9" Diagonal Nose (NSN 5120-01-112-5031) |
| 3W6 | 9" Cushion Throat |
| 5W4 | 9" Left Hand Twist |
| 2W393 | 12" Diagonal Nose |
| 6W4 | 12" Left Hand Twist |

## MANUAL RETURN


31W

| | |
|---|---|
| 9W | 6" Tapered Nose |
| 11W | 6" Diagonal Nose (NSN 5120-01-307-5143) |
| 1W | 9" Diagonal Nose (NSN 5120-00-305-2306) |
| 31W | 9" **AeroTwister® Professional's Choice** |
| 3W5 | 9" Cushion Throat |
| 5W6 | 9" Left Hand Twist |
| 1W392 | 9" With Bearing on Spinner |
| 2W | 12" Diagonal Nose (NSN 5120-00-542-4171) |
| 6W6 | 12" Left Hand Twist |

*Models may differ slightly from photographs

# SAFETY WIRE TWISTER

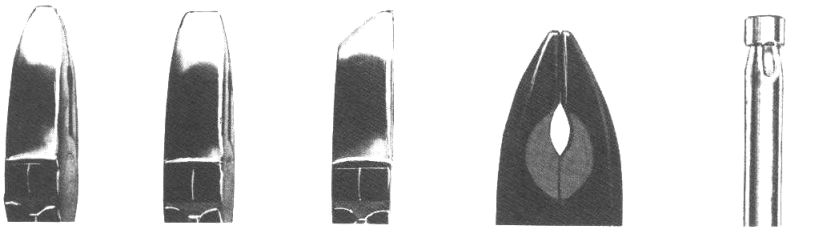

Tapered | Square | Diagonal | Cushion Throat | Deep Reach

**Descriptions:**

**Cushion Throat** — Form fit plastic in the jaws holds the cut ends of the wire and prevents them from flying into assembly.

**Automatic** — Twister mechanism retracts automatically making operation simpler and much faster.

**Right Hand Twist** — Safetytwist plier rotates clockwise when twister mechanism is pulled.

**Left Hand Twist** — Safetytwist plier rotates counter clockwise when twister mechanism is pulled.

**Deep Reach** — Twister mechanism with two extensions attached (overall 19") provides access to deep safetywiring jobs.

## SPECIALTY TWISTER - For difficult access situations; i.e. deep reach or close quarters.



**13W** 19" Deep Reach Twister

## SAFETY WIRE-STAINLESS STEEL

Conforms to Govt. Spec. QQW-423, Military Spec. MS-20995-C.



| | | |
|---|---|---|
| **14WA** | .020 Dia. - 234 Ft. | |
| **15WA** | .032 Dia. - 91 Ft. | **1/4 Lb. Spools** |
| **16WA** | .041 Dia. - 55 Ft. | |



| | | |
|---|---|---|
| **17WA** | .020 Dia. - 937 Ft. | |
| **18WA** | .025 Dia. - 599 Ft. | |
| **19WA** | .032 Dia. - 366 Ft. | **One Pound** |
| **20WA** | .041 Dia. - 223 Ft. | **Dispensers** |
| **21WA** | .051 Dia. - 144 Ft. | |

# SAFETY WIRE TWISTER KITS

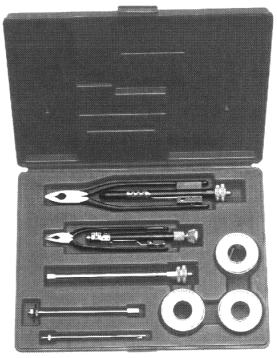

**No. 105W**

**Professional Safety Wiring Kit.** Contains three different Twisters to cover almost any application: 9" Automatic, 6" Mini, and a 19" Deep Reach Twister. Includes three 1/4 lb. spools of stainless steel safety wire (.020, .032, .041). Durable plastic storage case.

Weight: 4 lbs.
Length: 13-1/2" Width: 10"
Height: 2-1/16"



**No. 109W**

**Limited Access Safety Wiring Kit.** Contains the 6" Mini for general purpose wiring and work in close quarters, and the 19" Deep Reach Twister for special applications. Includes three 1/4 lb. spools of stainless steel safety wire (.020, .032, .041). Durable plastic storage case.

Weight: 2 lbs. 12 oz.
Length: 12-1/4" Width: 8"
Height: 1-3/4"

| Model Kits | Description |
|---|---|
| **105W** | Professional Kit includes 1W393, 9W, 13W, 14WA, 15WA, 16WA and Case (NSN 5180-90-986-8939) |
| **109W** | Deep Reach Kit includes 11W, 13W, 14WA, 15WA, 16WA and Case (NSN 5180-01-337-9841) |

# **Entgrater** / EDGE BREAKERS

**Zum Entgraten von Blechkanten**

REMOVE ANY BURRS AND ROUGHNESS FROM SHEETS



**2004**

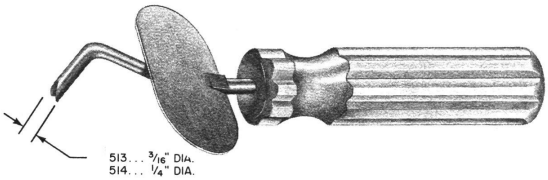


**514**

| **Artikel-Nr.** PART NO. | **Klingenmaß** BLADE SIZE | **Bemerkung** REMARKS |
|---|---|---|
| | | |
| **2004** | **15/64"** (6,00 mm) | **Holzgriff** / WOOD HANDLE |
| | | |
| **514** | **1/4"** (6,35 mm) | **Plastikgriff** / PLASTIC SAFETY HANDLE |

# **Spänehaken** / CHIP CHASERS

**Zum Entfernen von Späne zwischen Blechen nach dem Bohren**

REMOVE CHIPS BETWEEN SHEETS AFTER DRILLING OF HOLES

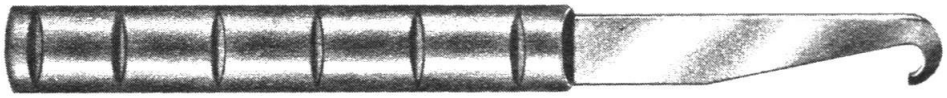

| **Artikel-Nr.** PART NO. | **Klingenlänge** BLADE LENGTH | **Bemerkung** REMARKS |
|---|---|---|
| | | |
| **511** | **2.3/4"** (70 mm) | **Plastikgriff** / PLASTIC HANDLE |
| **512** | **5.7/8"** (150 mm) | **Plastikgriff** / PLASTIC HANDLE |

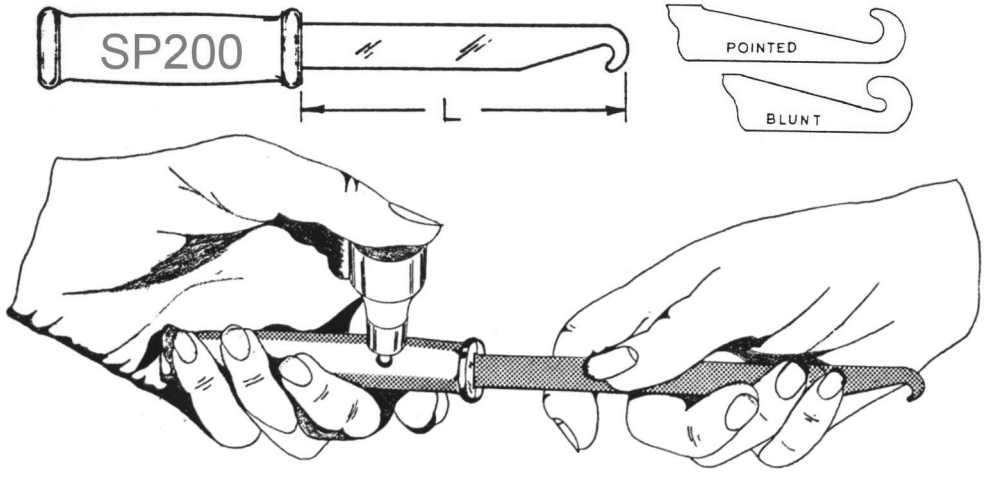


**Aluminium-Griff mit auswechselbarer Klinge**

ALUMINUM HANDLE WITH REPLACEABLE BLADES

| **Artikel-Nr.** PART NO. | **Klingenlänge** BLADE LENGTH | | **Artikel-Nr.** PART NO. | **Artikel-Nr.** PART NO. |
|---|---|---|---|---|
| **Griff mit Klinge** Blade with Handle | | | **Griff einzeln** HANDLE ONLY | **Ersatzklinge** REPLACEMENT BLADES |
| **SP200-1** | **5.7/8"** (150 mm) | | **SP200** | **SP20002** (POINTED HOOK) |
| **SP200-2** | **5.7/8"** (150 mm) | | **SP200** | **SP20003** (BLUNT HOOK) |
| **SP200-3** | **2.3/4"** (70 mm) | | **SP200** | **SP20004** (POINTED HOOK) |
| **SP200-4** | **2.3/4"** (70 mm) | | **SP200** | **SP20005** (BLUNT HOOK) |

# **Niet-Scheren** / RIVET CUTTERS

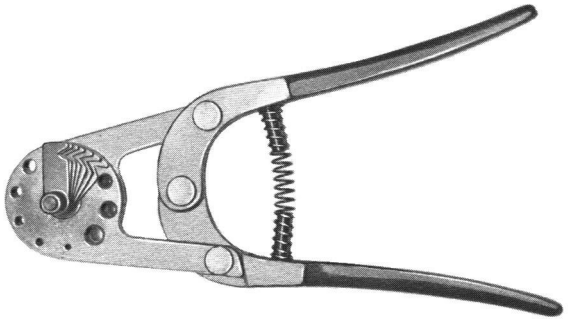

**501-R**

| | |
|---|---|
| Artikel-Nr. / Part No. | **501-R** |
| Nietdurchmesser / Rivet Size | 1/16" - 1/4" (1,59 - 6,35 mm) |
| Nietlängen / Rivet length | 1/4" - 3/4" (6,35 - 19,05 mm) |
| Teilung / Increments | 1/16" (1,59 mm) |



**EH-57**

| | |
|---|---|
| Artikel-Nr. / Part No. | **EH-57** |
| Länge / Length | 7" (180 mm) |

The EH-57 side nipper has a flat-ground blade, a curved handle and is ideal for close trimming of aluminum rivet stems on installed self-plugging MS-type rivets.

Der Seitenschneider EH-57 hat leicht gebogene Griffe, flache Schneiden mit sehr kleiner Fase, und ist ideal zum trimmen von Aluminium-Nietstiften bereits installierter selbstsichernder MS-Nieten.

## **Niet-Schere für den Schraubstock /** BENCH TYPE RIVET CUTTER



| **Artikel-Nr.** PART NO. | **Nietdurchmesser** RIVET SIZE | **Nietlängen** RIVET LENGTH | **Teilung** INCREMENTS |
|---|---|---|---|
| | | | |
| | **Zoll-Type** / INCH-TYPE | | |
| **500-Z** | **3/32" + 1/8" + 5/32"**<br>**3/16" + 7/32" + 1/4"**<br>(2,38 + 3,18 + 3,97 mm)<br>(4,76 + 5,56 + 6,35 mm) | **.1575 up to .9252**<br>(4,00 mm bis 23,50 mm)<br>**(inkl. 2 Distanzstücken)**<br>(INCL. 2 DISTANCE PIECES) | **.0197**<br>(0,5 mm) |
| | | | |
| | **Metrische-Type** / METRIC-TYPE | | |
| **500-M** | **2,50 + 3,00 + 3,50 mm**<br>**4,00 + 5,00 + 6,00 mm**<br>(.0980 + .1181 + .1378)<br>(.1575 + .1969 + .2362) | **4,00 mm bis 23,50 mm**<br>(.1575 up to .9252)<br>**(inkl. 2 Distanzstücken)**<br>(INCL. 2 DISTANCE PIECES) | **0,5 mm**<br>(.0197) |

# Gerade Ringschlüssel mit Schnappverschluß für Rohrverschraubungen
# STRAIGHT SNAP-TIGHT TUBE FITTING WRENCHES

| Artikel-Nr. PART NO. | Schlüsselweite HEX SIZE (in.) | Gesamtlänge OVERALL LENTH (in.) |
|---|---|---|
| 195-F 05 | 5/16 | 5-1/2 |
| 195-F 06 | 3/8 | 5-1/2 |
| 195-F 07 | 7/16 | 5-3/8 |
| 195-F 08 | 1/2 | 5-1/2 |
| 195-F 09 | 9/16 | 7-1/4 |
| 195-F 10 | 5/8 | 7-5/32 |
| 195-F 11 | 11/16 | 7-1/4 |
| 195-F 12 | 3/4 | 7-5/16 |
| 195-F 13 | 13/16 | 9-1/8 |
| 195-F 14 | 7/8 | 9-3/32 |
| 195-F 15 | 15/16 | 9-1/4 |
| 195-F 16 | 1 | 9-9/32 |
| 195-F 17 | 1-1/16 | 13.59 |
| 195-F 18 | 1-1/8 | 13.59 |
| 195-F 19 | 1-3/16 | 13.59 |
| 195-F 20 | 1-1/4 | 13.59 |
| 195-F 22 | 1-3/8 | 13.84 |
| 195-F 24 | 1-1/2 | 13.84 |
| 195-F 26 | 1-5/8 | 13.84 |
| 195-F 28 | 1-3/4 | 14.21 |
| 195-F 30 | 1-7/8 | 14.21 |
| 195-F 32 | 2 | 14.21 |
| 195-F 34 | 2-1/8 | 14.53 |
| 195-F 36 | 2-1/4 | 14.53 |

**(1) 5/16“ – 3/4" sizes have two-tone grips as shown.**
**(2) 13/16” – 1” sizes do not have grips.**
**(3) 1-1/16” – 2-1/4” sizes have foam grips (not shown).**




| Artikel-Nr. PART NO. | Schlüsselweite HEX SIZE (mm) | Gesamtlänge OVERALL LENTH (mm) |
|---|---|---|
| 195-F 07 | 7 | 140.72 |
| 195-F 08 | 8 | 140.72 |
| 195-F 09 | 9 | 140.72 |
| 195-F 10 | 10 | 140.72 |
| 195-F 11 | 11 | 140.72 |
| 195-F 12 | 12 | 140.72 |
| 195-F 13 | 13 | 140.72 |
| 195-F 14 | 14 | 187.45 |
| 195-F 15 | 15 | 187.45 |
| 195-F 16 | 16 | 187.45 |
| 195-F 17 | 17 | 187.45 |
| 195-F 18 | 18 | 187.45 |
| 195-F 19 | 19 | 187.45 |
| 195-F 21 | 21 | 237.50 |
| 195-F 22 | 22 | 237.50 |
| 195-F 23 | 23 | 237.50 |
| 195-F 24 | 24 | 237.50 |
| 195-F 27 | 27 | 345.19 |
| 195-F 30 | 30 | 345.19 |
| 195-F 32 | 32 | 345.19 |

**(1) 7-19 mm sizes have two-tone grips**
**(2) 21-24 mm sizes do not have grips.**
**(3) 27-32 mm sizes have foam grips (not shown).**




| Artikel-Nr. PART NO. | Beschreibung DESCRIPTION | Gewicht Weight (lbs.) |
|---|---|---|
| 195-4STDS KIT | 4-Pc. INCH kit contains 5/8”, 13/16”, 15/16”, and 1-1/16/” wrenches. (Not shown). | 2.3 |
| 195-5STDM KIT | 5-Pc METRIC kit contains 10mm, 11mm, 12mm, 13mm and 14mm wrenches. | 2 |
| 195-7-STDS KIT | 7-Pc INCH kit contains 3/8”, 7/16”, 1/2", 9/16”, 5/8”, 11/16” and 3/4” wrenches. | 2.5 |

## Zange zum Lösen von Leichtmetallverschraubungen
**(z.B. Cannon Elektrostecker)**
ELECTRICAL CONNECTOR PLIER
(CANNON CONNECTORS)

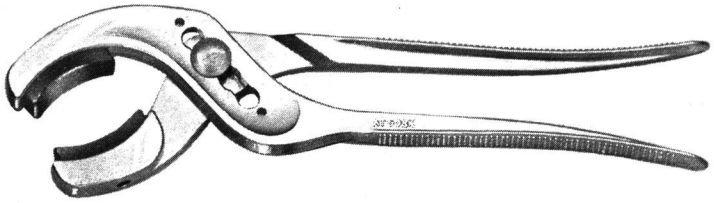

| **Artikel-Nr.** / PART NO. | **Bemerkungen** / REMARKS |
|---|---|
| | |
| **508-K** | **verstellbar von 19 mm bis 63 mm, mit austauschbaren Kunststoffbacken**<br>ADJUSTABLE FROM 3/4" TO 2.1/2"- REMOVEABLE PLASTIC INSERTS |

## Paint Cutters



- Reduces excess paint chip during screw removal process.
- Cuts a ring into paint around the screw head.

| Part Number | Screw Size | Shank |
|---|---|---|
| 70420 | #4 | 1/4”-28 |
| 70422 | #6 | |
| 70424 | #8 | |
| 70426 | #10 | |
| 70428 | 1/4" | |

## **Massebürsten** / RIVET HOLE BRUSHES

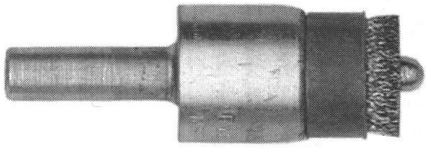

**Edelstahl Drahtbesatz**
STAINLESS STEEL WIRE
**Drahtstärke** **0,127 mm**
WIRE DIAMETER .005"
**Drehzahl bis max.** **8000 UPM**
RATED UP TO 8000 RPM

| **Artikel-Nr.** / PART NO. | **Zapfendurchmesser**<br>PILOT DIAMETER | **Bürstendurchmesser**<br>BRUSH DIAMETER | **Schaftdurchmesser**<br>SHANK DIAMETER |
|---|---|---|---|
| | | | |
| **TP-6721** | **3/32"** (2,38 mm) | **1/2"** (12,7 mm) | **1/4"** (6,35 mm) |
| **TP-6741** | **1/8"** (3,18 mm) | **1/2"** (12,7 mm) | **1/4"** (6,35 mm) |
| **TP-6761** | **5/32"** (3,97 mm) | **1/2"** (12,7 mm) | **1/4"** (6,35 mm) |
| **TP-6781** | **3/16"** (4,76 mm) | **1/2"** (12,7 mm) | **1/4"** (6,35 mm) |
| **TP-6791** | **7/32"** (5,56 mm) | **1/2"** (12,7 mm) | **1/4"** (6,35 mm) |
| **TP-6801** | **1/4"** (6,35 mm) | **1/2"** (12,7 mm) | **1/4"** (6,35 mm) |

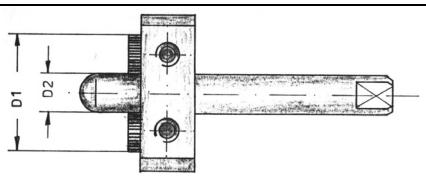


**Edelstahl Drahtbesatz**
**Alle Teile austauschbar**

STAINLESS STEEL WIRE
ALL PARTS ARE REPLACEABLE

| | **Bürste kpl.**<br>BRUSH ASSY | **Ersatz-Bürste**<br>**BRUSH ONLY** | **Ersatz-Zapfen**<br>PILOT ONLY | **Ersatz-Schaft**<br>SHANK ONLY | **Ersatzkörper**<br>BODY ONLY | **D1** | **D2** |
|---|---|---|---|---|---|---|---|
| **Artikel-Nr.** / PART NO. | **441001** | **441050** | **441056** | **441060** | **441065** | 10 mm | 3,2 mm |
| **Artikel-Nr.** / PART NO. | **441002** | **441050** | **441058** | **441060** | **441065** | 10 mm | 4,0 mm |
| **Artikel-Nr.** / PART NO. | **441010** | **441052** | **441056** | **441060** | **441068** | 12 mm | 3,2 mm |
| **Artikel-Nr.** / PART NO. | **441011** | **441052** | **441058** | **441060** | **441068** | 12 mm | 4,0 mm |
| **Artikel-Nr.** / PART NO. | **441020** | **441052** | **441056** | **441060** | **441070** | 14 mm | 3,2 mm |
| **Artikel-Nr.** / PART NO. | **441021** | **441052** | **441058** | **441060** | **441070** | 14 mm | 4,0 mm |
| **Artikel-Nr.** / PART NO. | **441022** | **441052** | **441059** | **441060** | **441070** | 14 mm | 4,8 mm |

# Druckluft-Staubsauger
# AIR VACUUM CLEANER

## 560C

**Staubsauger ohne Verlängerungen**
CLEANER WITHOUT TUBES
**Kunststoffgehäuse /** PLASTIC BODY



**560CF-18**

### Zubehör - Ersatzteile
### ACCESSORIES – SPARES

| Part Number | Material | Hose Length |
|---|---|---|
| **560R-10** | starre Verlängerung RIDGE TUBE | 10“ |
| **560CF-12** | flex. Verlängerung CLEAR FLEX TUBE | 12“ |
| **560CF-18** | flex. Verlängerung CLEAR FLEX TUBE | 18“ |

| | |
|---|---|
| **560A3** | Ersatzbeutel / BAG |
| **560A4** | Beutelverschluss / CLIP |



**560A3**



**560R10**

---

## 560M

**Staubsauger ohne Verlängerungen**
CLEANER WITHOUT TUBES
**Aluminiumgehäuse /** ALUMINUM BODY



**560MRE-12**

### Zubehör - Ersatzteile
### ACCESSORIES – SPARES

| Part Number | Material | Hose Length |
|---|---|---|
| **560MRE-12** | starre Verlängerung RIDGE TUBE | 12“ |
| **560MRE-18** | starre Verlängerung RIDGE TUBE | 18“ |
| **560MFE-18** | flex. Verlängerung CLEAR FLEX TUBE | 18“ |
| **560MFE-24** | flex. Verlängerung CLEAR FLEX TUBE | 24“ |

| | |
|---|---|
| **560A3** | Ersatzbeutel / BAG |
| **560A4** | Beutelverschluss / CLIP |



**560MFE18**

---

## 560MH

**Staubsauger mit flex. Verlängerung (12“)**
**und Hepa Filter Beutel**
CLEANER WITH FLEX. TUBE
AND HEPA FILTER BAG
**Aluminiumgehäuse /** ALUMINUM BODY



### Zubehör - Ersatzteile
### ACCESSORIES – SPARES

| Part Number | Material | Hose Length |
|---|---|---|
| **560MRE-12** | starre Verlängerung RIDGE TUBE | 12“ |
| **560MRE-18** | starre Verlängerung RIDGE TUBE | 18“ |
| **560MFE-18** | flex. Verlängerung CLEAR FLEX TUBE | 18“ |
| **560MFE-24** | flex. Verlängerung CLEAR FLEX TUBE | 24“ |

| | |
|---|---|
| **70071472602** | 3M Hepa Filter Beutel / HEPA BAG * |
| **70071472610** | 3M Filter Bag Adapter * |

*** Nur für 560MH verwendbar** / FOR USE WITH 560MH ONLY

# Absaugsysteme
# DUST CONTROL

CLAYTON
Dustless Made Simple™

**Effektive Werkzeuge für das sichere und saubere Arbeiten in der Luft- und Raumfahrt.**

**Aufnahme der meisten gefährlichen Stoffe durch HEPA Filter und innovative durchdachte Absaugvorrichtungen. Durch das einfache Nachrüsten Ihrer bestehenden Werkzeuge ist das System auch kostengünstig einzusetzen.**

---

**Innovative products designed for vacuum extraction in aerospace manufacturing and MRO.**

**High Efficiency Filtration (HEPA) vacuums and source-capture shrouded tools for dustless sanding, structural repair and composites fabrication. Simply attach to your existing tools.**


















The ACE-1000 Dustless Sanding System

Everything you need for serious dustless sanding and cleanup!




**Weitere Informationen auf Anfrage /** MORE INFORMATION ON REQUEST

# Absaugsysteme
DUST CONTROL

CLAYTON
Dustless Made Simple™

## Shrouded Tools Control Dust & Debris
## Ummantelte Werkzeuge gegen Staub und Späne

Sealant Removal







50 mm and 75 mm Cutoff Saws



125 mm & 150 mm Random



Drum Sander



75 mm Random Orbital



Belt Sander



75 mm X 100 mm Orbital



Airbus Abrading Kit



Corner Sander



Drill Shroud
Fits all drills using
3/8-24 drill chuck









**Weitere Informationen auf Anfrage /** MORE INFORMATION ON REQUEST

# Absaugsysteme
# DUST CONTROL

CLAYTON
Dustless Made Simple™

## Clear Revolution Shrouds



## Seat Track Cleaning and Corrosion



## Drill Bushing Guides with Extraction



## Edge Deburring and Finishing



## Clear Revolution Piloted Burnishing



## Routers







**Weitere Informationen auf Anfrage /** MORE INFORMATION ON REQUEST

# Nadelfeilen-Satz
NEEDLE FILE SET
# ATSK 3519 K




**Lieferumfang** / CONSISTING OF:

| | | |
|---|---|---|
| **1 St.**/EA | **Plastiktasche** | PLASTIC POUCH |
| **12 St.**/EA | **Feilen 160 mm** | GROBET FILES 6.1/4" |
| **1 St.**/EA | **Halter mit Spannfutter** | COLLET LOCKING HANDLE |

# Taschenlampen - MAG LITE
FLASHLIGHT - MAG LITE

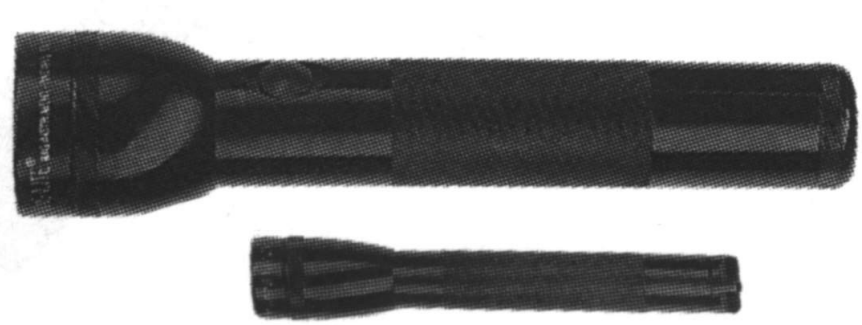

| **Artikel Nr.** PART NO. | **Beschreibung** DESCRIPTION |
|---|---|
| | |
| **M2A-016** | **Taschenlampe "MINI MAGLITE", Länge ca. 146 mm, inkl. 2 Batterien** 2-CELL AA Flashlight, "MINI MAGLITE", LENGTH 5.3/4", INCL. 2 BATTERIES |
| | |
| **S2D-016** | **Taschenlampe "MAGLITE", Länge ca. 260 mm, Batterien nicht enthalten !** 2-CELL D FLASHLIGHT, "MAGLITE", LENGTH 10.1/4", BATTERIES NOT INCLUDED |

# Pneumatische Blechscheren
# PNEUMATIC SHEARS

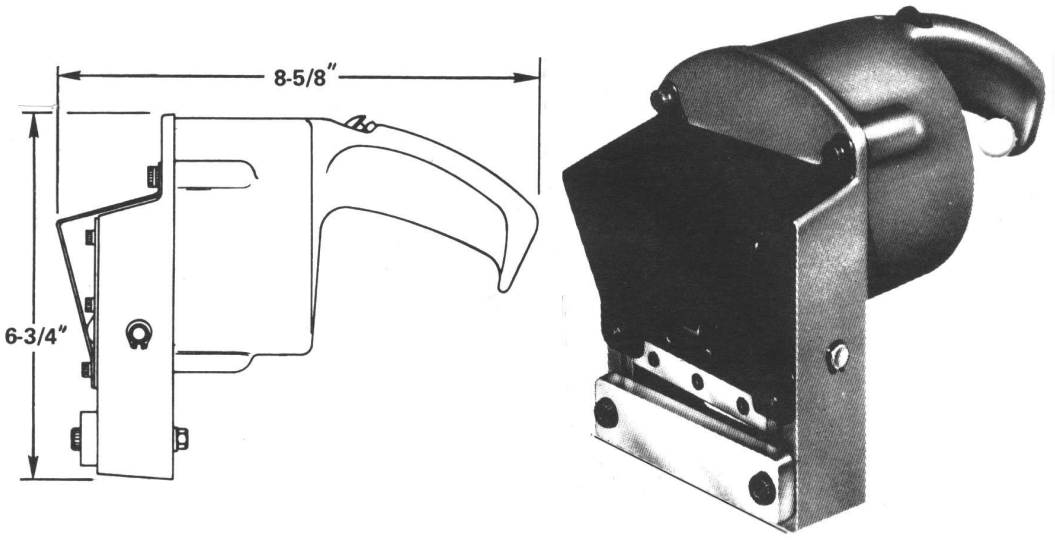


**Schlagschere**
TAB SHEAR

**Artikel-Nr.** / PART NO.: **650**

| | |
|---|---|
| **Leistung** | **1,6 mm Stahl 2,4 mm Aluminium** |
| CAPACITY | 1/16" Steel 3/32" Aluminum |
| **Öffnung** | **3,18 mm x 76,2 mm** |
| OPENNING | 1/8" x 3" |
| **Gewicht** | **ca. 3 kg** |
| WEIGHT | APPR. 6.5 LBS. |




| | |
|---|---|
| **Leistung** | **max. 1,2 mm Stahl** |
| CAPACITY | 18 GAUGE STEEL |
| **Gewicht** | **1,3 kg** |
| WEIGHT | 2,9 LBS. |

**Artikel-Nr.** / PART NO.: **P-500**




| | |
|---|---|
| **Leistung** | **: max. 1,9 mm Stahl** |
| CAPACITY: | 14 GAUGE STEEL |
| **Gewicht:** | **1,7 kg** |
| WEIGHT: | 3,8 LBS. |

**Artikel-Nr.** / PART NO.: **P-540**

# PNEUM. ROLLENSCHEREN, UMSCHALTBAR
# PNEUM. TRIM SHEARS, REVERSIBLE



**EC-7 PR**

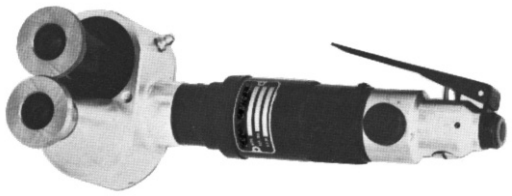

**EC-8 LR**

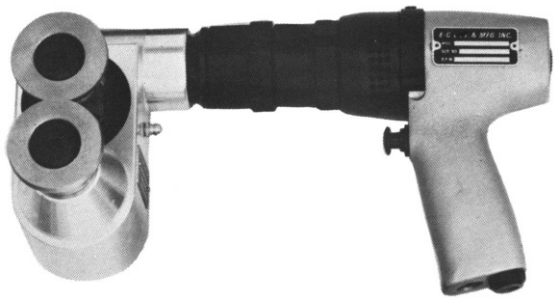

**EC-9 PR**

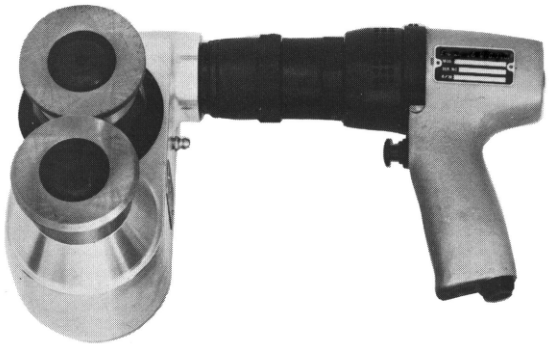

**EC-10 PR**

| **Artikel Nr. *** PART NO. * | **ca. Leistung/Normal Stahl** APPR. CAP./MILD STEEL | | **Schnittweite** THROAT CAP. | **Gewicht** WEIGHT | **Länge** LENGTH | **Höhe** HEIGHT | **Breite** WIDTH | **min. Schlauchweite** MIN. HOSE SIZE |
|---|---|---|---|---|---|---|---|---|
| **EC-7 LR** | **13 Gauge** ca. 2,4 mm | **8 Ft./min** 2,4 m/min | **1.1/4"** 31,75 mm | **4.5 lbs.** 2,1 kg | **10.1/4"** 260 mm | **3.13/16"** 97 mm | **3.1/4"** 83 mm | **5/16"** 8 mm |
| **EC-7 PR** | **13 Gauge** ca. 2,4 mm | **8 Ft./min** 2,4 m/min | **1.1/4"** 31,75 mm | **5 lbs.** 2,3 kg | **8.1/4"** 210 mm | **3.13/16"** 97 mm | **3.1/4"** 83 mm | **5/16"** 8 mm |
| **EC-8 LR** | **14 Gauge** ca. 2,1 mm | **8 Ft./min** 2,4 m/min | **2.1/4"** 57,15 mm | **5.5 lbs.** 2,5 kg | **10.1/4"** 260 mm | **3.13/16"** 97 mm | **4.1/4"** 108 mm | **5/16"** 8 mm |
| **EC-8 PR** | **14 Gauge** ca. 2,1mm | **8 Ft./min** 2,4 m/min | **2.1/4"** 57,15 mm | **5.5 lbs.** 2,5 kg | **8.1/4"** 210 mm | **3.13/16"** 97 mm | **4.1/4"** 108 mm | **5/16"** 8 mm |
| **EC-9 PR** | **10 Gauge** ca. 3,4 mm | **4 Ft./min** 1,2 m/min | **2.1/2"** 63,50 mm | **12.5 lbs.** 5,7 kg | **11.5/8"** 295 mm | **5.5/8"** 143 mm | **5"** 127 mm | **3/8"** 9,5 mm |
| | | | | | | | | |
| | **ca. Leistung/Edelstahl** APPR. CAP./INCONEL | | | | | | | |
| **EC-10PR** | **Upto .080"** bis 2,00 mm | **3.5 Ft./min** 1,0 m/min | **2."** 50,80 mm | **19 lbs.** 8,6 kg | **12.1/8"** 308 mm | **7.3/8"** 187 mm | **5"** 127 mm | **3/8"** 9,5 mm |

*** L = Straight Motor/Gerader Motor P = PistolGrip Motor/Pistolengriff-Motor R = Reversible Motor/Umschaltbarer Motor**

## ERSATZROLLEN FÜR ROLLENSCHEREN
## REPLACEMENT ROLLS FOR TRIM SHEARS

| **für Rollenschere Mod.** FOR TRIM-SHEAR MOD. | **Artikel-Nr./Zuführschneidrolle** PART-NO./FEED CUTTER | **Artikel-Nr./Schneidrolle** PART-NO./ROLL CUTTER |
|---|---|---|
| **EC-7** | **EC9097** | **EC9098** |
| **EC-8** | **EC9097** | **EC9101** |
| **EC-9** | **EC9280** | **EC9279** |
| **EC-10** | **EC9915** | **EC9914** |

# PNEUMATIC & HAND NIBBLER

## Dotco Pneumatic Nibbler

| 12-10 Series 0.6 hp (0.45 kW) | | | |
|---|---|---|---|
| **Part Number** | **Cap. (steel)** | **Overall Length** | **Weight** |
| 12L2062-96 | 18 Gauge | 8-3/8" (213 mm) | 1.1 lbs (0.5 kg) |




- Rear exhaust
- Oilless blades optional

## Kett Pneumatic Nibbler

| 1.0 hp (0.75 kW) | | | |
|---|---|---|---|
| **Part Number** | **Cap. (steel)** | **Overall Length** | **Weight** |
| AN2000 | 14 Gauge | 10" (254 mm) | 7 lbs (3.2 kg) |



- Precise cutting control for light metal cutting needs.
- Also cuts most grades of stainless to 16 gauge.

## Kett Pneumatic Nibbler

| 0.5 hp (0.37 kW) | | | |
|---|---|---|---|
| **Part Number** | **Cap. (steel)** | **Overall Length** | **Weight** |
| PN-1000 | 18 Gauge | 7.3/4" (197 mm) | 2.5 lbs (1.1 kg) |



## Quick-Snip Hand Nibbler

| Part Number | Capacity Steel | Capacity Aluminum |
|---|---|---|
| 04-J1251 | 18 Gauge | 15 Gauge |



- Heavy-duty, industrial quality.
- No distorting, burring or curling at edges of cut.

## Monodex Hand Nibbler

| Part Number | Capacity Steel | Capacity Aluminum |
|---|---|---|
| 04-J1351 | 17 Gauge | 15 Gauge |

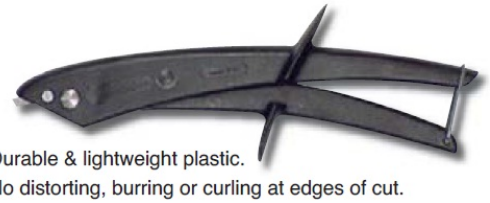

- Durable & lightweight plastic.
- No distorting, burring or curling at edges of cut.

# Heißlufgebläse
# HOT AIR GUN




**351052 Case**
**BHG 360 Li-Ion**

| **PART NO.** | **351052 Case** |
|---|---|
| Dimensions (h x w x d) | 240 x 65 x 265 mm |
| Voltage | 36 V, rechargeable li-ion battery |
| Output | 300 W |
| Temperature | 400 °C without nozzle / 500 °C with 7 mm reduction nozzle (included) |
| Airflow rate | 100 l/min. |
| Run time | 15 min. |
| Charger | LS-36 V |
| Charging time | 2.6 Ah 30 min (75%) 60 min. (100%) |
| Weight | approx. 1790 g<br>(including rechargeable battery) |

**Declaration of independence for hot air**

STEINEL gives you mobility: With its powerful li-ion rechargeable battery, the cordless version of the practical HG 350 S provides ultimate freedom of movement for hot-air applications – even at places without mains power. The formidable 36-volt li-ion power pack that drives the BHG 360 Li-Ion has a capacitance of 2600 mAh and delivers the energy for 15 minutes of unrestricted hot-air work. It has no memory effect and impresses with minimal self-discharge.
As a result, this hot air tool - which provides the same temperature stages at its mains-powered counterpart - is immediately ready for operation even after a prolonged period out of use.

The charger supplied with the tool recharges the battery to 75% capacity in just 30 min and to full charge in 60 min.

**Features**

- Lightweight, ergonomically optimised hot air tool
- Integrated LED light
- Integrated ring for hanging the tool
- Soft grip handle
- Thermal cut-out
- ESD-safe: suitable for use at places where there is a risk of electrostatic discharge
- "Thermo-Signal" temperature indicator

**Setting capabilities**

Three-stage switch for setting OFF/COLD/HOT


Ideal for de-soldering electronic components


With optional reflector nozzle, ideal for shrinking cable sleeves



Conveniently positioned control switch for setting OFF / COLD / HOT


The ergonomically shaped soft grip handle ensures comfortable handling


The LED light always provides bright illumination in the work area and also serves as a telltale lamp


With its hanging ring, the BHG 350 Li-Ion is always in easy reach in extreme work situations

# Semco Dosierpistolen
# SEMCO SEALANT GUNS

## Pneumatic Gun



**250A-6 (250065)**
*without Air Hose Assembly

| Artikel-Nr. PART NO. | Modell MODEL | Kartuschen Kapazität CARTRIDGE CAPACITY |
|---|---|---|
| **250255** | 250A-2.5 | 2.5 Ounce |
| **250065** | 250A-6 | 6 Ounce |
| **250125** | 250A-12 | 12 Ounce |

## Manual Gun




**850-6 (221830)**

| Artikel-Nr. PART NO. | Modell MODEL | Kartuschen Kapazität CARTRIDGE CAPACITY |
|---|---|---|
| **221824** | 850-2.5 | 2.5 Ounce |
| **221830** | 850-6 | 6 Ounce |
| **221836** | 850-12 | 12 Ounce |

## Druckluftschlauch/Anschluss
Air Hose Assemblies

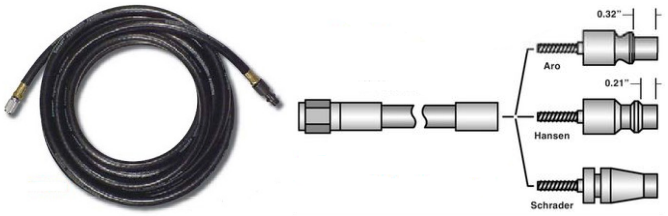


| Aro Connect | Hansen Connect | Schrader Connect | Overall Length |
|---|---|---|---|
| 280012 | 280000 | 280006 | 5' (1,5m) |
| 280013 | 280001 | 280007 | 10' (3,0m) |

## Standarddüsen
Standart Nozzles

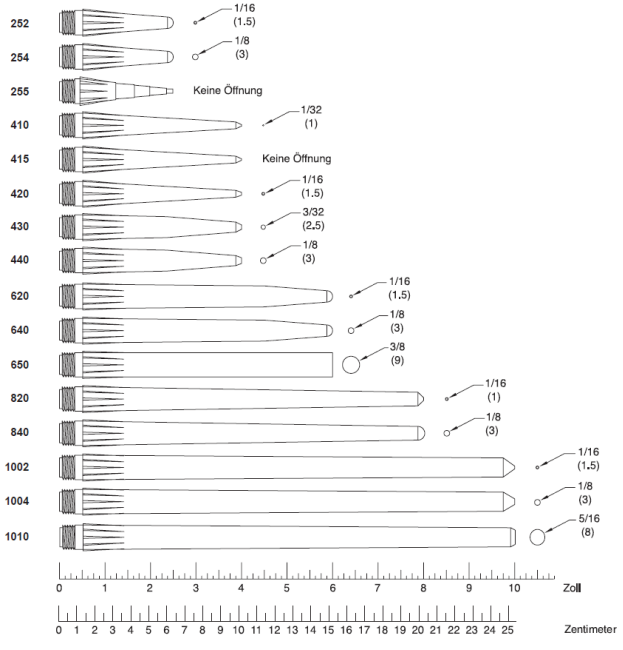


Alle Maße in Zoll. Maßangaben in Klammern in Millimeter.

## Kartuschenhalter
Sealant Gun Retainers



*only for Pneumatic Gun

| 220256 | 220928 | 220923 |
|---|---|---|
| 2.5 Ounce | 6 Ounce | 12 Ounce |

## Leerkartuschen, Kolben und Dichtungen
DISPOSABLE PLASTIC CARTRIDGES, PLUNGERS & CAPS

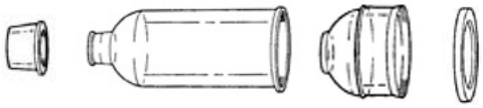

**Dichtung** Front End Cap | **Kartusche** Cartride | **Kolben** Plunger | **Flanschkappe** Flange End Cap

| Kartusche Cartridge | Kartusche & Kolben Cartridge & Plunger | Kapazität Capacity |
|---|---|---|
| **220315** | **220323** | 2.5 Ounce |
| **220318** | **220325** | 6 Ounce |
| **220321** | **220329** | 12 Ounce |

| Artikel-Nr. PART NO. | Beschreibung DESCRIPTION |
|---|---|
| **220252** | Plastik Kolben<br>PLASTIC END CAP |
| **220257** | Dichtung<br>Front End Cap |
| **220238** | Flanschkappe<br>Flange end Cap |

# APPLICATION / REMOVAL TOOLS & ACCESSORIES

## Sealant Mixer



•Securely chucks into your drill for mixing Semkit sealant tubes.

| Part Number | Shank |
|---|---|
| 70337 | 1/4" Hex |

## Roller Nozzles



| Roller Assembly | Replacement Roller | Size |
|---|---|---|
| 232693 | 232701 | 1” (25 mm) |
| 232692 | 232702 | 2” (51 mm) |

- Apply sealant evenly over a wide area of substrate.
- Ideal for the application of faying surface sealants.
- Use with disposable cartridges.

## Nylon Sealant Tape Roller



| Part Number | Roller Diameter | Roller Width |
|---|---|---|
| 70339 | 1-1/4” (32 mm) | 2” (51 mm) |

- For Applying Sealant Tape
- Allows maximum pressure for a leak-proof & smooth seal

## Sealant Spatulas



7-1/4” Overall length

**Available in:**
-NGL (MEDIUM)
-UNGL (ULTRA STRONG)
-XNGL (EXTREME)

| Part Number | End Widths |
|---|---|
| 226241 | 0.19” & 0.38” |
| 226242 | 0.13” & 0.28” |
| 226243 | 0.48” & 0.38” |

| Part Number | Description |
|---|---|
| 226244 | All Three Spatulas With Plastic Case |

## Stainless Steel Sealant Spatula Set



Surgical Stainless Steel Construction

| Part Number | Description |
|---|---|
| 57-104-2 | Complete 4 PC Set |

- Four double-end tools with different angles and knife shapes.
- Great for shaping and spreading sealant and other soft materials.

## Sealant Smoothing Tool



Fiberglass reinforced plastic for tooling & smoothing sealants.

| Part Number | Overall Length |
|---|---|
| 231349 | 9-1/2” (241 mm) |

## Solid Brass Sealant Smoothing Tool



Non-Sparking & Reusable, Perfect for Aerospace Work

| Part Number | Overall Length |
|---|---|
| 70799 | 9” (229 mm) |

# APPLICATION / REMOVAL TOOLS & ACCESSORIES

## Masking Tape Cutter



| Part Number | Dimensions |
|---|---|
| 70796 | 8”L (3/16” thick) x 1” Wide |

Durable Acrylic Plastic Construction
***Note**: May scratch new sheet metal.

## Sealant Spreaders



| Part Number | Type | Dimensions |
|---|---|---|
| 229394 | Standard | 4.0” x 2.8” (102 x 71 mm) |
| 229395 | Comb | 3.0” x 3.0” (76 x 76 mm) |

- Reinforced Plastic Construction

## Scratch Resistant Hand Scrapers



| Scratch Resistant Sealant Scraper | | |
|---|---|---|
| **Part Number** | **Size** | **Tip Width** |
| 70792 | 6”L (3/16” thick) | 3/4" |
| 70794 | 9”L (3/16” thick) | 3/4” & 1/4" |

***Note:** Celcon Plastic, Scratch / Chemical Resistant

## Hand Scraper



| Part Number | Overall Length |
|---|---|
| 11493 | 5-7/8” (149 mm) |

Specially blended plastic designed for sealants, paint, glues etc.

## Specialty Hand Scrapers



| Hardened Sealant Scraper | | |
|---|---|---|
| **Part Number** | **Size** | **Tip Width** |
| 70784 | 8”L (3/16” thick) | 2” & 3/4" |

Glass Filled Nylon Plastic, Double Angle Tips for Toughness



| Hardened Sealant Scraper | | |
|---|---|---|
| **Part Number** | **Size** | **Tip Width** |
| 70780 | 9”L (3/16” thick) | 3/4” & 1/4" |

Glass Filled Nylon Plastic, Double Angle Tips for Toughness



| Hardened Sealant & Seat Track Scraper | | |
|---|---|---|
| **Part Number** | **Size** | **Tip Width** |
| 70782 | 9”L (3/16” thick) | 3/4” & 1/4" |

Glass Filled Nylon Plastic, Double Angle Tips for Toughness



| Soft Sealant Scraper | | |
|---|---|---|
| **Part Number** | **Size** | **Tip Width** |
| 70786 | 6” (3/16” thick) | 3/4” |

Acrylic Plastic, Long Angled Edge, Single End with Rounded Handle



| Soft & Wet Sealant Scraper | | |
|---|---|---|
| **Part Number** | **Size** | **Tip Width** |
| 70788 | 9”L (3/16” thick) | 3/4" & 1/4" |

Acrylic Plastic, Long Angled Edge



| Soft Sealant Scraper | | |
|---|---|---|
| **Part Number** | **Size** | **Tip Width** |
| 70790 | 9”L (3/16” thick) | 1” & 1/4" |

Acrylic Plastic, Double Angle Tips for Toughness
**Note:** May scratch new sheet metal.

# APPLICATION / REMOVAL TOOLS & ACCESSORIES

## Sealant Removal Cutters



| Part Number | Diameter | Thread | Recommended RPM | Max RPM |
|---|---|---|---|---|
| 96933 | .40” | 1/4-28 | 950 | 3,200 |
| 96935 | .83” | 1/4-28 | 950 | 3,200 |

- Bottom & side cutting plastic blades.
- Aggressively removes sealant without damaging substrate.
- Internal cavity on 96935 for use over standard fasteners & rivets.

## Sealant Removal Bristle Disks



| Bristle Disc Arbor & Tow Holding Caps | |
|---|---|
| **Part Number** | **Capacity** |
| 96458 | 1/8” to 1/4" & 3/8” to 1/2" |

| Bristle Discs | | | |
|---|---|---|---|
| **Part Number** | **Diameter** | **Recommended RPM** | **Max RPM** |
| 96937 | 2” | 12,000 | 20,000 |
| 96939 | 3” | 12,000 | 20,000 |

- Abrasive, particle filled discs remove up 1/16” of sealant
- Bristles remove sealant without damaging underlying surface.

## Sioux Sealant Removal Tool Kit 45° & 90°



| Part Number | Description |
|---|---|
| 1AM1141/51K | Complete 14 PC Kit |

- Perfect For Limited Access Areas
- Remove aircraft sealants quickly & safely with minimal effect on paint, primer or aircraft metal.
- 800 RPM drill includes both 45° & 90° angle head assemblies.
- Eliminates the need to use chemical solvents for better worker health & safety, as well as easier cleanup

**Includes:**
800 RPM Drill Motor
45° & 90° Angle Head Assemblies, Thread 1/4-28
Five 96933 Cutters
Five 96935 Cutters
Fitted Carrying Case

## Sealant Removal Angle Drill



* shows 1AM1141

| Part Number | Angle Head | Free RPM | O.A.L. | Weight |
|---|---|---|---|---|
| 1AM1151 | 90° | 800 | 11,5” (292 mm) | 1.8 lbs (0,8 kg) |
| 1AM1141 | 45° | 800 | 11,5” (292 mm) | 1.8 lbs (0,8 kg) |

# Sealant Applicators and Smoothing Tools

TOOLS ON THE FOLLOWING PAGES ARE AVAILABLE IN MATERIALS LISTED BELOW.
MATERIAL CODE/USAGE FOR PART NUMBER COMPLETION:

| | |
|---|---|
| -PP | High density polypropylene is our softest material and suited to removal or spreading of softer sealants and coatings. Is the material of choice for application of films such as tint/security film on glass surfaces. |
| -ACRYL/PC | Harder materials which are 'pure' plastics without glass reinforcement. Correctly used,these are best for working on polished surfaces, where polypropylene is too soft. Less likely to pick up surface grit or contamination than polypropylene and with less abrasive potential than glass filled materials. |
| -CEL | Aerospace certified material without any glass reinforcement. Suited to removal of relatively soft (or chemically softened) coatings. |
| -NGL | Glass-filled Nylon (15%) holds a better edge than PP but still has some resilience. The glass reinforcement has some potential for surface marring but used with lubricants or chemicals this is unlikely even on relatively soft surfaces. |
| -UNGL | Glass-filled Nylon (30%) has less resilience and is best 'general purpose' material as it can still tackle removal/application processes on softer surfaces when used with care, but is also suited to tougher removal operations. Holds a very good edge which can be resharpened. |
| -XNGL | Glass-filled Nylon (50%) is the hardest and strongest of all our tool plastics and holds a very sharp and hard edge. Glass content gives inherently abrasive properties suited to very tough material removal operations. Still far less likely to mar surfaces than metal tools and is particularly suited to re-sharpening. Extreme resistance to chemicals and solvents and minimal degradation of strength over time. |

## Sealant Application Tools / Spreading

**ITH-40-NGL**

Handle for Tips below



* only available in -NGL

| **RT-41-S** Bead Tip | **RT-42-S** Scoop Tip | **RT-43-S** Squeegee Tip |
|---|---|---|
| 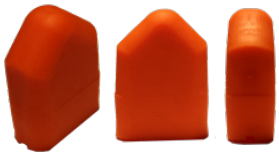 | 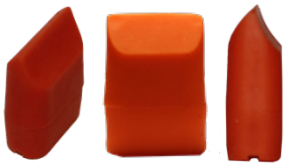 | 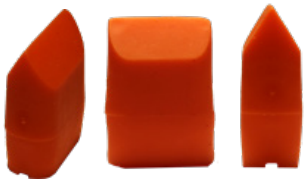 |

## Extended Reach Tool Systems



# Scraper Tools

## 4 Piece Kit

Kit Includes:
ATH-8-( )*
ATH-9-( )*
ATH-10-( )*
ATH-11-( )*

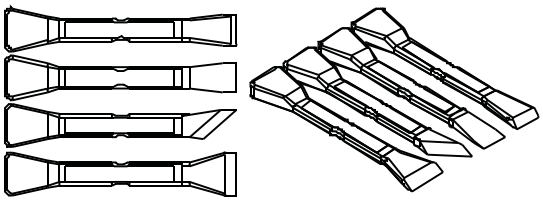

(P/N ATH-S-(____)* )

## 11 Piece Micro Scraper Kits

Kit Includes:
MSH-1-UNGL
10 X S-1-XNGL

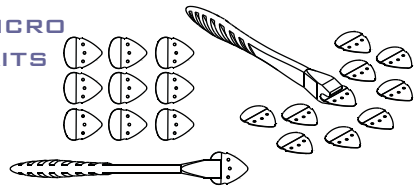

(P/N MSH-K-XNGL)

## 5 Piece Kit

Kit Includes:
ATH-11-XNGL
ATH-10-XNGL
ATH-8-XNGL
ATH-15-XNGL
ATH-17-XNGL

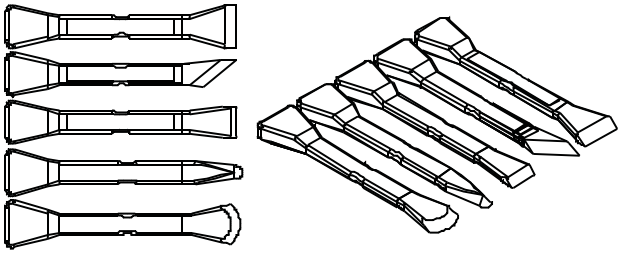

(P/N ATH-SUK2X-XNGL)

## 5 Piece Kit & Pouch

Kit Includes:
ATH-11-XNGL
ATH-10-XNGL
ATH-8-XNGL
ATH-15-XNGL
ATH-17-XNGL
TR-5-R



(P/N ATH-SUK2-XNGL)

## 5 Piece Kit

Kit Includes:
ATH-8-XNGL
ATH-10-XNGL
ATH-14-XNGL
ATH-23-XNGL
ATH-24-XNGL

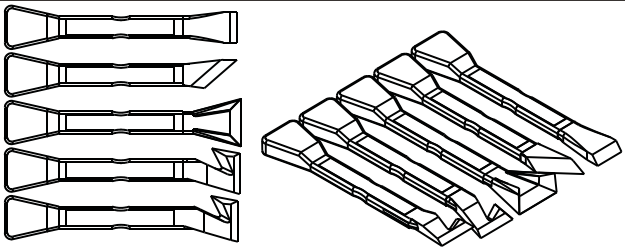

(P/N ATH-SUK3X-XNGL)

## 5 Piece Kit & Pouch

Kit Includes:
ATH-8-XNGL
ATH-10-XNGL
ATH-14-XNGL
ATH-23-XNGL
ATH-24-XNGL
TR-5-R



(P/N ATH-SUK3-XNGL)

## 10 Piece Kit

Kit Includes:

| | |
|---|---|
| ATH-8-( )* | ATH-15-( )* |
| ATH-9-( )* | ATH-16-( )* |
| ATH-10-( )* | ATH-17-( )* |
| ATH-11-( )* | ATH-18-( )* |
| ATH-13-( )* | ATH-14-( )* |

Greatly Reduces The Likelihood of Damage To The Base Material!

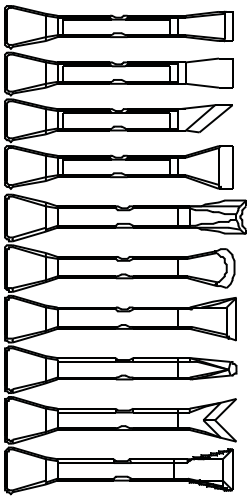

Touch Enough To Scrape

But Not Hard Enough to Damage!

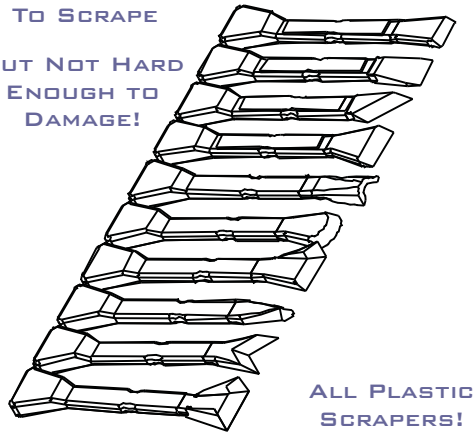

All Plastic Scrapers!

(P/N ATH-DS2-UNGL)



For Use in Sensitive Scraping Applications!

## 10 Piece Kit & Pouch

Kit Includes:
ATH-DS2-UNGL
TR-10-R



(P/N ATH-DSG2-UNGL)

## 2 Piece Push/Pull Scraper Kit

Kit Includes:
ATH-23-XNGL
ATH-24-XNGL

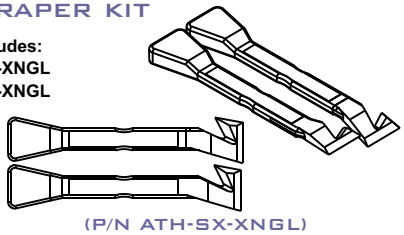

(P/N ATH-SX-XNGL)

Scrapers can be purchased separately / Auch einzeln lieferbar

# Pry Tools

## 4 Piece Kit

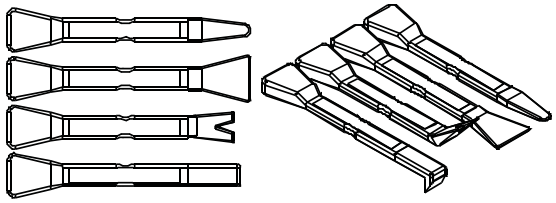

Kit Includes:
ATH-1-( )*
ATH-2-( )*
ATH-3-( )*
ATH-4-( )*

(P/N ATH-K-(____)* )

## 2 Piece Narrow Pry Tool Kit

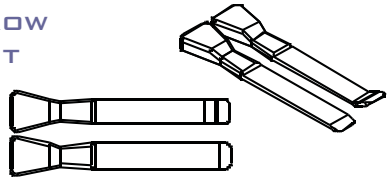

Kit Includes:
ATH-20-XNGL
ATH-21--XNGL

(P/N ATH-KX-XNGL)

## 5 Piece Kit

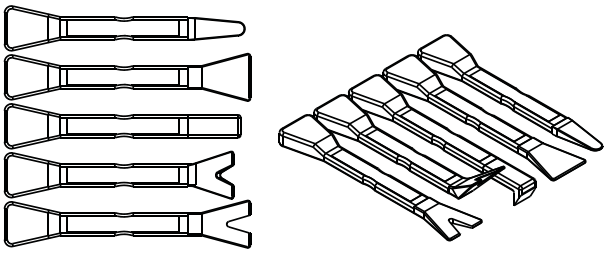

Kit Includes:
ATH-1-(___)*
ATH-2-(___)*
ATH-4-(___)*
ATH-5-(___)*
ATH-7-(___)*

(P/N ATH-KUK-(_____)* )

## 5 Piece Pry Kit & Pouch



Kit Includes:
ATH-1-(___)*
ATH-2-(___)*
ATH-4-(___)*
ATH-5-(___)*
ATH-7-(___)*
TR-5-R

(P/N ATH-SUK2-XNGL)

## 7 Piece Pry Kit

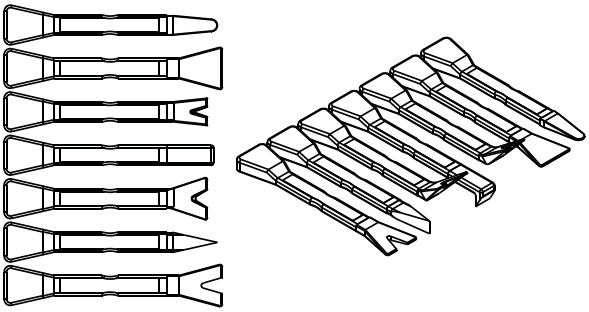

Kit Includes:
ATH-1-(___)*
ATH-2-(___)*
ATH-3-(___)*
ATH-4-(___)*
ATH-5-(___)*
ATH-6-(___)*
ATH-7-(___)*

(P/N ATH-M-(___)* )

## 5 Piece Window Tint Kit & Pouch



Kit Includes:
ATH-1-PP
ATH-2-PP
ATH-23-PP
ATH-24-PP
ATH-29-PP
TR-5-R

(P/N ATH-SUK2-XNGL)

## 10 Piece Mixed Pry Kit & Pouch



Kit Includes:
ATH-1-NGL ATH-6-NGL
ATH-2-NGL ATH-7-NGL
ATH-3-NGL ATH-1-PP
ATH-4-NGL ATH-5-PP
ATH-5-NGL
GTR-M-PMMA-BK

(P/N ATH-MG-NGL)

## 8 Piece Panel Adjustment Kit & Pouch



Kit Includes:
LTF-1-N ATH-20-XNGL
ATH-5-UNGL ATH-21-XNGL
ATH-19-UNGL LTF-2-N
ATH-19R406-UNGL
GTR-M-PMMA-BK

## 10 Piece Pry/Scraper Kit & Pouch



Kit Includes:
ATH-1-NGL ATH-8-UNGL
ATH-2-NGL ATH-9-UNGL
ATH-4-NGL ATH-10-UNGL
ATH-5-NGL ATH-11-UNGL
ATH-6-NGL
ATH-7-NGL

(P/N ATH-MUK-NGL)

## 10 Piece Mixed Pry/Scraper Kit & Pouch



Kit Includes:
ATH-1-NGL ATH-6-NGL
ATH-2-NGL ATH-7-NGL
ATH-3-NGL ATH-1-PP
ATH-4-NGL ATH-5-PP
ATH-5-NGL
GTR-M-PMMA-BK
ATH-8-UNGL
ATH-9-UNGL
ATH-10-UNGL
ATH-11-UNGL

(P/N ATH-MP-NGL)

## 2 Piece Large Pry Tool Kits

Kit Includes:
LTF-1-N
LTF-2-N

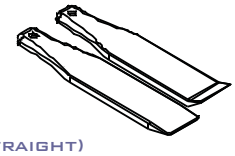

(Straight)
(P/N LTF-K-N)

Kit Includes:
LTF-3-UNGL
LTF-4-UNGL

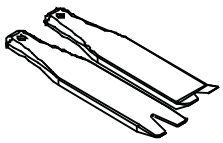

(Forked)
(P/N LTF-K3-UNGL)

Touch Enough To Pry But Not Hard Enough to Damage!

All Plastic Pry Tools!

Greatly Reduces The Likelihood of Damage To The Base Material!

For Use in Sensitive Prying Applications!

Scrapers can be purchased separately / Auch einzeln lieferbar

# APPLICATION/REMOVAL TOOLS & ACCESSORIES

## Air Chisel Quick Disconnect Scraper

| Schaft 10,2 x 30 / 40,3 mm<br>SHANK .401 x 1.164 / 1.11/16” | Artikel-Nr.<br>PART NO. | Größe<br>SIZE |
|---|---|---|
|  | **AHSQD-8-XNGL** | 21 mm |
|  | **AHSQD-9-XNGL** | 21 mm |
|  | **AHSQD-27-XNGL** | 13 mm |
|  | **AHSQD-17-XNGL** | 6-10 mm |
|  | **AHSQD-6-XNGL** | 12 mm |
|  | **AHSQD-29-XNGL** | 50 mm |
|  | **AHSQD-15-XNGL** | 29 mm |
|  | **AHSQD-62-XNGL** | 6 mm |

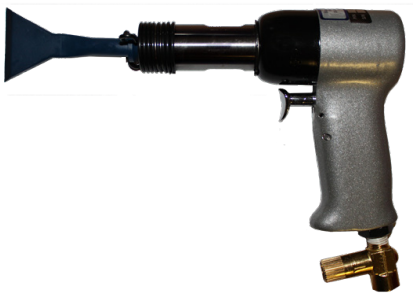



**SP-12-NGL**
Extended Reach Pole System 12” (30,5cm)

**RECOMMENDED USE WITH OUR RIVET HAMMER 2-X (WITH QUICK CHANGE RETAINER SPRING 114C-3)**

**Andere Abmessungen/Formen auf Anfrage** / OTHER DIMENSIONS/SHAPES ON REQUEST

# Vakuumsauger
# VACUUM CUP



**TL3TH**

**3" Concave Vacuum Cup with T-Handle**

**Used to detect damage in honeycomb core sandwich structures by applying vacuum.**

**Features:**

Compact size for accurate positioning of small items.

Attaches to flat or curved smooth, nonporous surfaces.

Alternates as vacuum mounting cup with 1/4-20 threaded stud when handle is removed.

Red-line indicator warns user of any vacuum loss.
Check valve allows repumping without loss of remaining vacuum.
Lift tabs on vacuum pad edges permit instant release.
Supplied with vacuum pad protector.

**Specifications:**

Vacuum Pad: Concave, 3" [8 cm] diameter (model TL3)

Minimum Radius for Curved Load: 4" [102 mm]
Load Capacity: 15 lbs [7 kg] per vacuum cup

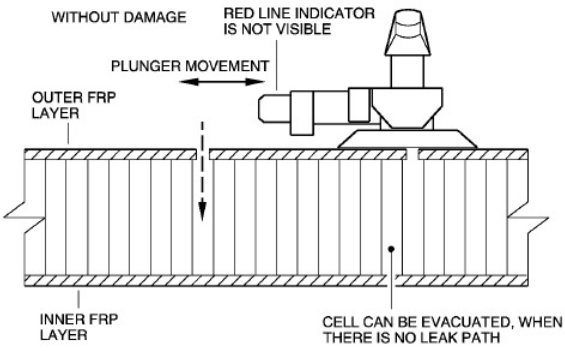


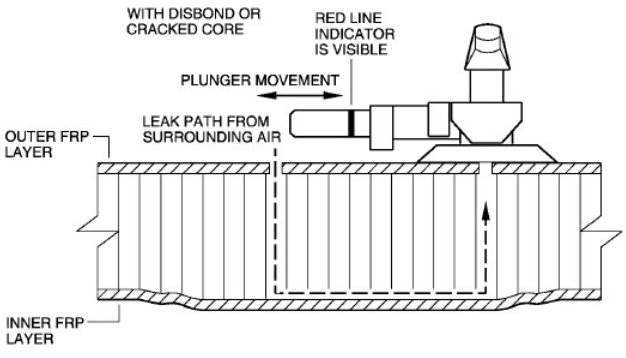

# HI-LOK SECHSKANT-STIFTSCHLÜSSEL
## HI-LOK HEX KEYS

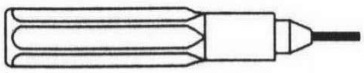

**607**

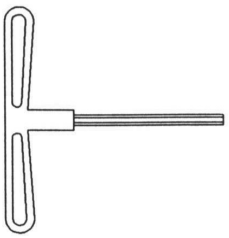

**EH609**

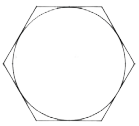

| Artikel Nr. PART NO. | Stift-Größe HEX KEY SIZE | | Sechskantstifte, grade REPLACEMENT STRAIGHT BITS | Artikel Nr. PART NO. | Stift-Größe HEX KEY SIZE | |
|---|---|---|---|---|---|---|
| **607-028** | **.028** | 0,71 mm | 57900 | **EH609-3/32"** | **3/32"** | 2,38 mm |
| **607-035** | **.035** | 0,89 mm | 57902 | **EH609-1/8"** | **1/8"** | 3,18 mm |
| **607-050** | **.050** | 1,27 mm | 57904 | **EH609-5/32"** | **5/32"** | 3,97 mm |
| **607-1/16"** | **1/16"** | 1,59 mm | 57906 | **EH609-3/16"** | **3/16"** | 4,76 mm |
| **607-5/64"** | **5/64"** | 1,98 mm | 57910 | **EH609-7/32"** | **7/32"** | 5,56 mm |
| **607-3/32"** | **3/32"** | 2,38 mm | 57914 | **EH609-1/4"** | **1/4"** | 6,35 mm |
| **607-1/8"** | **1/8"** | 3,18 mm | 57926 | **EH609-5/16"** | **5/16"** | 7,94 mm |

# Sechskant Winkelschlüssel
## HEX L-Wrench

**KURZ INCH** / SHORT INCH



**LANG INCH** / LONG INCH



| Artikel Nr. PART NO. | Größe SIZE | Inch | mm | Inch | mm | Artikel Nr. PART NO. | Größe SIZE | Inch | mm | Inch | mm |
|---|---|---|---|---|---|---|---|---|---|---|---|
| **57002** | **.028** | 1.2 | 31 | 0.22 | 6 | **-** | - | - | - | **-** | - |
| **57004** | **.035** | 1.2 | 31 | 0.34 | 9 | **58007** | **.035** | 2.7 | 68 | 0.34 | 9 |
| **57006** | **.050** | 1.6 | 42 | 0.53 | 13 | **58003** | **.050** | 2.8 | 72 | 0.53 | 13 |
| **57008** | **1/16** | 1.8 | 45 | 0.56 | 14 | **58001** | **1/16** | 3.0 | 76 | 0.56 | 14 |
| **57010** | **5/64** | 1.9 | 48 | 0.61 | 15 | **58002** | **5/64** | 3.2 | 81 | 0.61 | 15 |
| **57012** | **3/32** | 2.0 | 51 | 0.65 | 16 | **58004** | **3/32** | 3.4 | 86 | 0.65 | 16 |
| **57013** | **7/64** | 2.1 | 54 | 0.70 | 18 | **58005** | **7/64** | 3.6 | 90 | 0.70 | 18 |
| **57014** | **1/8** | 2.3 | 58 | 0.75 | 19 | **58006** | **1/8** | 3.8 | 95 | 0.75 | 19 |
| **57018** | **9/64** | 2.4 | 61 | 0.80 | 20 | **58010** | **9/64** | 4.0 | 101 | 0.80 | 20 |
| **57020** | **5/32** | 2.5 | 64 | 0.84 | 21 | **58012** | **5/32** | 4.2 | 107 | 0.84 | 21 |
| **57022** | **3/16** | 2.8 | 70 | 0.94 | 24 | **58014** | **3/16** | 4.5 | 114 | 0.94 | 24 |
| **57024** | **7/32** | 3.0 | 77 | 1.03 | 26 | **58016** | **7/32** | 4.9 | 124 | 1.03 | 26 |
| **57026** | **1/4** | 3.3 | 83 | 1.13 | 29 | **58018** | **1/4** | 5.3 | 133 | 1.13 | 29 |
| **57028** | **5/16** | 3.8 | 96 | 1.25 | 32 | **58020** | **5/16** | 6.0 | 152 | 1.25 | 32 |

# Stiftschlüssel, ASTER-Recess (5LOP)



**Winkelschlüssel** / Angle Wrench

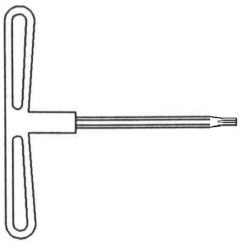

**T-Griff**
T-Handle



Aster® Recess Shape

| Artikel Nr. PART NO. | SIZE | DESC. | SCREW DIA. | Artikel Nr. PART NO. | SIZE | DESC. | SCREW DIA. |
|---|---|---|---|---|---|---|---|
| **EHW-A5L-05** | **5/32** | A5L-05 | 2 | **EHT-A5L-05** | **5/32** | A5L-05 | 2 |
| **EHW-A5L-06** | **3/16** | A5L-06 | 3 | **EHT-A5L-06** | **3/16** | A5L-06 | 3 |
| **EHW-A5L-07** | **7/32** | A5L-07 | 3A | **EHT-A5L-07** | **7/32** | A5L-07 | 3A |
| **EHW-A5L-08** | **1/4** | A5L-08 | 4 | **EHT-A5L-08** | **1/4** | A5L-08 | 4 |

# HI-LOK LEHREN
# HI-LOK SCALES

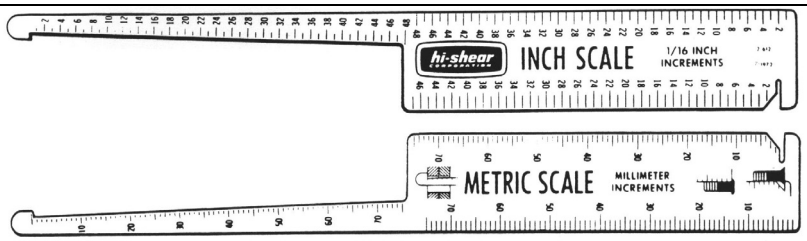


**2-612**

**Klemmlängenlehre, 1 mm Teilung bis 75 mm Klemmlänge**
**zum Messen der Bohrlochtiefe und Klemmlänge des Nietes**
GRIP SCALE, 1/16 INCREMENTS TO 3"
FOR MEASURING DEPTH OF HOLE AND GRIP LENGTH OF FASTENERS

## Pin Protrusion Gauges

Lehrensatz (min./max.) zum Überprüfen der richtigen Klemmlänge nach dem Einbau des Hi-Lok/Hi-Lite
PIN PROTRUSION GAGE FOR INSPECTION OF PINS FOR CORRECT GRIP LENGTH

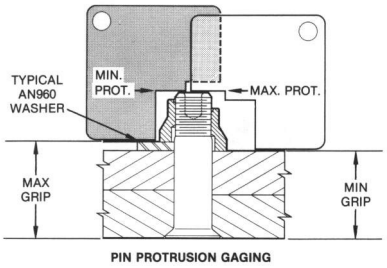


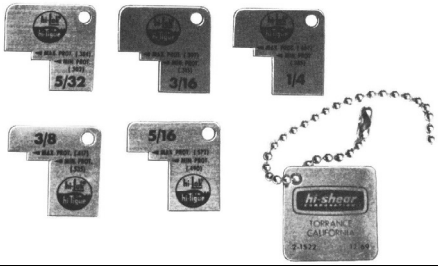


| Artikel Nr. PART NO. | Beschreibung DESCRIPTION | | Pin Durchmesser PIN DIAMETERS |
|---|---|---|---|
| **2-1522** | Hi-Lok/Hi-Tigue | **(Inches)** | 5/32”, 3/16” 1/4”, 5/16” and 3/8” |
| **2-1522-2** | Hi-Lok/Hi-Tigue | **(Inches)** | 7/16“, 1/2“, 9/16“, 5/8“ and 3/4" |
| **2-1522HLM** | Hi-Lok/Hi-Tigue | **(Metric)** | 4, 5, 6, 8, 10 and 12mm |
| **2-1522HST** | Hi-Lite | **(Inches)** | 5/32”, 3/16”, 1/4”, 5/16” and 3/8” |
| **2-1522HSTM** | Hi-Lite | **(Metric)** | 4, 5, 6, 8, 10 and 12mm |

## Tight Squeeze Hand Tool

**The unique "Tight-Squeeze" is a full function hand tool for Hi-Lok fastener installation. This amazing tool does just what the name implies. It gets into tight places, and allows one-handed Hi-Lok installation.**

- **Single-Handed operation**
- **Zero backlash or "toothless" ratchet**
- **Cost-effective**



| Artikel Nr. PART NO. | SOCKET SIZE | SOCKET PART NUMBER | HEX KEY SIZE | HEX KEY PART NUBER |
|---|---|---|---|---|
| **TSQ25-218-062** | **7/32** | **ATHS218** | **1/16** | **TSQ-062** |
| **TSQ25-250-062** | **1/4** | **ATHS250** | **1/16** | **TSQ-062** |
| **TSQ25-281-062** | **9/32** | **ATHS281** | **1/16** | **TSQ-062** |
| **TSQ25-312-062** | **5/16** | **ATHS312** | **1/16** | **TSQ-062** |
| **TSQ25-281-079** | **9/32** | **ATHS281** | **5/64** | **TSQ-079** |
| **TSQ25-312-079** | **5/16** | **ATHS312** | **5/64** | **TSQ-079** |
| **TSQ25-343-079** | **11/32** | **ATHS343** | **5/64** | **TSQ-079** |
| **TSQ25-437-079** | **7/16** | **ATHS437A** | **5/64** | **TSQ-079** |
| **TSQ25-312-094** | **5/16** | **ATHS312** | **3/32** | **TSQ-094** |
| **TSQ25-343-094** | **11/32** | **ATHS343** | **3/32** | **TSQ-094** |
| **TSQ25-437-094** | **7/16** | **ATHS437A** | **3/32** | **TSQ-094** |

# Hi-Lok Hand-Einbauwerkzeuge
## HI-LOK HAND INSTALLATION TOOLS

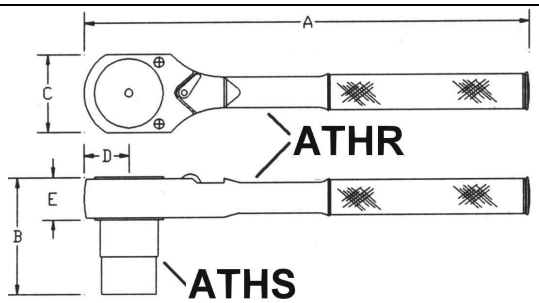


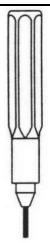

**607**

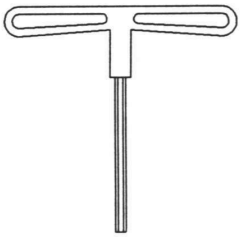

**609**

| kompl. Werkzeug COMPLETE ASSEMBLY | Nuß-Größe SOCKET HEX (ATHS) | Stift-Größe HEX KEY SIZE (607 & 609) | A | B | C | D | E | Ratsche RATCHET | Nuß SOCKET | Stift-schlüssel HEX-KEY |
|---|---|---|---|---|---|---|---|---|---|---|
| **ATHA-1** | **3/16"** 4,76 mm | **1/16** 1,59 mm | **5"** 127 mm | **1.1/4"** 32 mm | **15/16"** 24 mm | **7/16"** 11 mm | **3/8"** 10 mm | **ATHR250** | **ATHS187** | **607-1/16"** |
| **ATHA-2** | **7/32"** 5,56 mm | **1/16** 1,59 mm | **5"** 127 mm | **1.1/4"** 32 mm | **15/16"** 24 mm | **7/16"** 11 mm | **3/8"** 10 mm | **ATHR250** | **ATHS218** | **607-1/16"** |
| **ATHA-3** | **1/4"** 6,35 mm | **1/16** 1,59 mm | **5"** 127 mm | **1.1/4"** 32 mm | **15/16"** 24 mm | **7/16"** 11 mm | **3/8"** 10 mm | **ATHR250** | **ATHS250** | **607-1/16"** |
| **ATHA-4** | **9/32"** 7,14 mm | **1/16** 1,59 mm | **5"** 127 mm | **1.1/4"** 32 mm | **15/16"** 24 mm | **7/16"** 11 mm | **3/8"** 10 mm | **ATHR250** | **ATHS281** | **607-1/16"** |
| **ATHA-5** | **5/16"** 7,94 mm | **1/16** 1,59 mm | **5"** 127 mm | **1.1/4"** 32 mm | **15/16"** 24 mm | **7/16"** 11 mm | **3/8"** 10 mm | **ATHR250** | **ATHS312** | **607-1/16"** |
| **ATHA-6** | **11/32"** 8,73 mm | **1/16** 1,59 mm | **5"** 127 mm | **1.1/4"** 32 mm | **15/16"** 24 mm | **7/16"** 11 mm | **3/8"** 10 mm | **ATHR250** | **ATHS343** | **607-1/16"** |
| **ATHA-7** | **7/32"** 5,56 mm | **5/64"** 1,98 mm | **5"** 127 mm | **1.1/4"** 32 mm | **15/16"** 24 mm | **7/16"** 11 mm | **3/8"** 10 mm | **ATHR250** | **ATHS218** | **607-5/64"** |
| **ATHA-8** | **1/4"** 6,35 mm | **5/64"** 1,98 mm | **5"** 127 mm | **1.1/4"** 32 mm | **15/16"** 24 mm | **7/16"** 11 mm | **3/8"** 10 mm | **ATHR250** | **ATHS250** | **607-5/64"** |
| **ATHA-9** | **9/32"** 7,14 mm | **5/64"** 1,98 mm | **5"** 127 mm | **1.1/4"** 32 mm | **15/16"** 24 mm | **7/16"** 11 mm | **3/8"** 10 mm | **ATHR250** | **ATHS281** | **607-5/64"** |
| **ATHA-10** | **5/16"** 7,94 mm | **5/64"** 1,98 mm | **5"** 127 mm | **1.1/4"** 32 mm | **15/16"** 24 mm | **7/16"** 11 mm | **3/8"** 10 mm | **ATHR250** | **ATHS312** | **607-5/64"** |
| **ATHA-11** | **11/32"** 8,73 mm | **5/64"** 1,98 mm | **5"** 127 mm | **1.1/4"** 32 mm | **15/16"** 24 mm | **7/16"** 11 mm | **3/8"** 10 mm | **ATHR250** | **ATHS343** | **607-5/64"** |
| **ATHA-12A** | **3/8"** 9,53 mm | **5/64"** 1,98 mm | **5"** 127 mm | **1.1/4"** 32 mm | **15/16"** 24 mm | **7/16"** 11 mm | **3/8"** 10 mm | **ATHR250** | **ATHS375A** | **607-5/64"** |
| **ATHA-12** | **3/8"** 9,53 mm | **5/64"** 1,98 mm | **7"** 178 mm | **1.1/2"** 38 mm | **1.1/4"** 32 mm | **5/8"** 16 mm | **1/2"** 13 mm | **ATHR375** | **ATHS375** | **607-5/64"** |
| **ATHA-13** | **5/16"** 7,94 mm | **3/32"** 2,38 mm | **5"** 127 mm | **1.1/4"** 32 mm | **15/16"** 24 mm | **7/16"** 11 mm | **3/8"** 10 mm | **ATHR250** | **ATHS312** | **EH609-3/32"** |
| **ATHA-14** | **11/32"** 8,73 mm | **3/32"** 2,38 mm | **5"** 127 mm | **1.1/4"** 32 mm | **15/16"** 24 mm | **7/16"** 11 mm | **3/8"** 10 mm | **ATHR250** | **ATHS343** | **EH609-3/32"** |
| **ATHA-15A** | **3/8"** 9,53 mm | **3/32"** 2,38 mm | **5"** 127 mm | **1.1/4"** 32 mm | **15/16"** 24 mm | **7/16"** 11 mm | **3/8"** 10 mm | **ATHR250** | **ATHS375A** | **EH609-3/32"** |
| **ATHA-15** | **3/8"** 9,53 mm | **3/32"** 2,38 mm | **7"** 178 mm | **1.1/2"** 38 mm | **1.1/4"** 32 mm | **5/8"** 16 mm | **1/2"** 13 mm | **ATHR375** | **ATHS375** | **EH609-3/32"** |
| **ATHA-16** | **7/16"** 11,11 mm | **3/32"** 2,38 mm | **7"** 178 mm | **1.1/2"** 38 mm | **1.1/4"** 32 mm | **5/8"** 16 mm | **1/2"** 13 mm | **ATHR375** | **ATHS437** | **EH609-3/32"** |
| **ATHA-21** | **1/2"** 12,7 mm | **3/32"** 2,38 mm | **7"** 178 mm | **1.1/2"** 38 mm | **1.1/4"** 32 mm | **5/8"** 16 mm | **1/2"** 13 mm | **ATHR375** | **ATHS500** | **EH609-3/32"** |
| **ATHA-17** | **3/8"** 9,53 mm | **1/8"** 3,18 mm | **7"** 178 mm | **1.1/2"** 38 mm | **1.1/4"** 32 mm | **5/8"** 16 mm | **1/2"** 13 mm | **ATHR375** | **ATHS375** | **EH609-1/8"** |
| **ATHA-18** | **7/16"** 11,11 mm | **1/8"** 3,18 mm | **7"** 178 mm | **1.1/2"** 38 mm | **1.1/4"** 32 mm | **5/8"** 16 mm | **1/2"** 13 mm | **ATHR375** | **ATHS437** | **EH609-1/8"** |
| **ATHA-22** | **1/2"** 12,7 mm | **1/8"** 3,18 mm | **7"** 178 mm | **1.1/2"** 38 mm | **1.1/4"** 32 mm | **5/8"** 16 mm | **1/2"** 13 mm | **ATHR375** | **ATHS500** | **EH609-1/8"** |
| **ATHA-19** | **7/16"** 11,11 mm | **5/32"** 3,97 mm | **7"** 178 mm | **1.1/2"** 38 mm | **1.1/4"** 32 mm | **5/8"** 16 mm | **1/2"** 13 mm | **ATHR375** | **ATHS437** | **EH609-5/32"** |
| **ATHA-20** | **1/2"** 12,7 mm | **5/32"** 3,97 mm | **7"** 178 mm | **1.1/2"** 38 mm | **1.1/4"** 32 mm | **5/8"** 16 mm | **1/2"** 13 mm | **ATHR375** | **ATHS500** | **EH609-5/32"** |
| **ATHA-23** | **3/8"** 9,53 mm | **5/64"** 1,98 mm | **7"** 178 mm | **1.437"** 37 mm | **1.375"** 35 mm | **0.687"** 18 mm | **0,5"** 13 mm | **ATHR375** | **ATHS375** | **607-5/64"** |
| **ATHA-24** | **1/2"** 12,70 mm | **3/32"** 2,38 mm | **7"** 178 mm | **1.5"** 38 mm | **1.375"** 35 mm | **0.687"** 18 mm | **0,5"** 13 mm | **ATHR375** | **ATHS500** | **EH609-3/32"** |
| **ATHA-25** | **1/2"** 12,70 mm | **1/8"** 3,18 mm | **7"** 178 mm | **1.5"** 38 mm | **1.375"** 35 mm | **0.687"** 18 mm | **0,5"** 13 mm | **ATHR375** | **ATHS500** | **EH609-1/8"** |

# Hi-Lok Hand-Einbauwerkzeuge für große Collar
# HI-LOK HAND INSTALLATION TOOLS FOR LARGE SIZE COLLAR

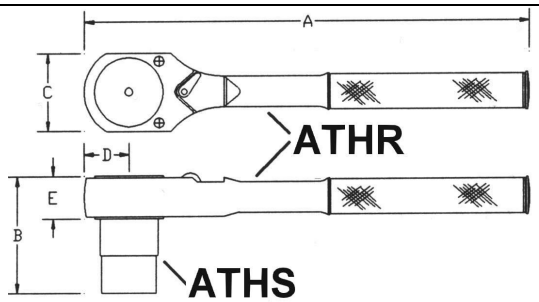


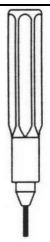

**607**

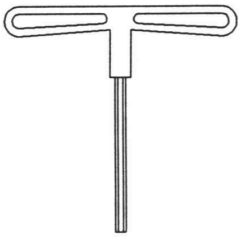

**609**

| kompl. Werkzeug COMPLETE ASSEMBLY | Nuß-Größe SOCKET HEX (ATHS) | Stift-Größe HEX KEY SIZE (607 & 609) | A | B | C | D | E | Ratsche RATCHET | Nuß SOCKET | Stift-schlüssel HEX-KEY |
|---|---|---|---|---|---|---|---|---|---|---|
| | | | | | | | | | | |
| **ATHA-26** | **9/16"** 14,29 mm | **1/8"** 3,18 mm | **10"** 254 mm | **2.187"** 56 mm | **1.75"** 45 mm | **1.75"** 45 mm | **0.687"** 18 mm | **ATHR500** | **ATHS562** | **EH6091/8"** |
| **ATHA-27** | **9/16"** 14,29 mm | **5/32"** 3,97 mm | **10"** 254 mm | **2.187** 56 mm | **1.75"** 45 mm | **1.75"** 45 mm | **0.687"** 18 mm | **ATHR500** | **ATHS562** | **EH6095/32"** |
| **ATHA-28** | **9/16"** 14,29 mm | **3/16"** 4,76 mm | **10"** 254 mm | **2.187"** 56 mm | **1.75"** 45 mm | **1.75"** 45 mm | **0.687"** 18 mm | **ATHR500** | **ATHS562** | **EH6093/16"** |
| **ATHA-29** | **5/8"** 15,88 mm | **5/32"** 3,97 mm | **10"** 254 mm | **2.187"** 56 mm | **1.75"** 45 mm | **1.75"** 45 mm | **0.687"** 18 mm | **ATHR500** | **ATHS625** | **EH6095/32"** |
| **ATHA-30** | **11/16"** 17,46 mm | **5/32"** 3,97 mm | **10"** 254 mm | **2.25"** 57 mm | **1.75"** 45 mm | **1.75"** 45 mm | **0.687"** 18 mm | **ATHR500** | **ATHS687** | **EH6095/32"** |
| **ATHA-31** | **11/16"** 17,46 mm | **7/32"** 5,56 mm | **10"** 254 mm | **2,25"** 57 mm | **1.75"** 45 mm | **1.75"** 45 mm | **0.687"** 18 mm | **ATHR500** | **ATHS687** | **EH6097/32"** |
| **ATHA-32** | **3/4"** 19,05 mm | **3/16"** 4,76 mm | **10"** 254 mm | **2.25"** 57 mm | **1.75"** 45 mm | **1.75"** 45 mm | **0.687"** 18 mm | **ATHR500** | **ATHS750** | **EH6093/16"** |
| **ATHA-33** | **7/8"** 22,23 mm | **7/32"** 5,56 mm | **10"** 254 mm | **2.437"** 62 mm | **1.75"** 45 mm | **1.75"** 45 mm | **0.687"** 18 mm | **ATHR500** | **ATHS875** | **EH6097/32"** |
| | | | | | | | | | | |
| **ATHA-34** | **15/16"** 23,81 mm | **1/4"** 6,35 mm | **20"** 508 mm | **3.125"** 79 mm | **2.625"** 67 mm | **2.625"** 67 mm | **1.125"** 29 mm | **ATHR750** | **ATHS937** | **EH6091/4"** |
| **ATHA-35** | **1"** 25,40 mm | **1/4"** 6,35 mm | **20"** 508 mm | **3.125"** 79 mm | **2.625"** 67 mm | **2.625"** 67 mm | **1.125"** 29 mm | **ATHR750** | **ATHS1000** | **EH6091/4"** |
| **ATHA-36** | **1.1/8"** 28,58 mm | **5/16"** 7,94 mm | **20"** 508 mm | **3.437"** 87 mm | **2.625"** 67 mm | **2.625"** 67 mm | **1.125"** 29 mm | **ATHR750** | **ATHS1125** | **EH6095/16"** |

# Nüsse mit Öffnung zum Auswerfen des Sechskants
## HEX EJECTING SOCKET

| Artikel-Nr. PART NO. | Größe SIZE | Vierkantaufnahme SQUARE DRIVE | Gesamtlänge OAL |
|---|---|---|---|
| **CES5/16** | 5/16“ | 1/4“ | 2“ (51mm) |
| **CES11/32** | 11/32“ | 1/4“ | 2“ (51mm) |



# Hi-Lok Handeinbauwerkzeug
# HI-LOK HAND INSTALLATION TOOL
# Roller Drive Wrench Assembly



ZRDA80-31



ZRDW80S-250

**The Roller Drive Wrench Assemblies** are ideal for the installation of any frangible hex collar fastener system such as Hi-Lok, Hi-Lite, Hi-Tigue, Veri-Lite and C-Lok and the removal of any hex nut or hex collar in the most difficult close quarter applications.

**Features**

- One piece hot forged handle construction for maximum strength.
- Bright yellow knurled handle for easy visibility reducing chance of FOD.
- Minimum edge and height clearance plus a minimum handle swing angle allows easy access to the most restricted close quarter applications.
- The 1/4" square drive spindle and all ZRDS sockets feature a through hole for those applications that require the use of a hex keys.
- The ZRDW roller drive wrench also accepts all standard 1/4" square drive sockets.

All components listed below are completely interchangeable and can be ordered separately or as an assembly.

**How To select a tool: T**o order a complete assembly select the roller drive wrench 6.0" or 3.0" length from the parts list to the rigth. Then select the aappropriate ZRDS socket hex that match the collar or nut hex. Example:

ZRDA80-31 Includes:

- ZRDW80 Roller Drive Wrench 6.0" OAL
- ZRDS-31 5/16" Drive Hex Socket

To order the Roller Drive Wrench equipped with a 1/4" square drive the part numbers are:

ZRDW80S-250 3.0" Handle
ZRDW80-250 6.0" Handle

| Socket Hex Size | Complete Tool Part-Number | Roller Drive Wrench Part Number | Socket Part Number |
|---|---|---|---|
| 3/16 | ZRDA80-18S | | ZRDS-18 |
| 7/32 | ZRDA80-22S | ZRDW80S | ZRDS-22 |
| 1/4 | ZRDA80-25S | | ZRDS-25 |
| 9/32 | ZRDA80-28S | 80 in lbs | ZRDS-28 |
| 5/16 | ZRDA80-31S | | ZRDS-31 |
| 11/32 | ZRDA80-34S | 3" OAL | ZRDS-34 |
| 3/8 | ZRDA80-37S | | ZRDS-37 |
| 7/16 | ZRDA80-43S | | ZRDS-43 |
| 3/16 | ZRDA80-18 | | ZRDS-18 |
| 7/32 | ZRDA80-22 | ZRDW80 | ZRDS-22 |
| 1/4 | ZRDA80-25 | | ZRDS-25 |
| 9/32 | ZRDA80-28 | 80 in lbs | ZRDS-28 |
| 5/16 | ZRDA80-31 | | ZRDS-31 |
| 11/32 | ZRDA80-34 | 6" OAL | ZRDS-34 |
| 3/8 | ZRDA80-37 | | ZRDS-37 |
| 7/16 | ZRDA80-43 | | ZRDS-43 |

# Torque Wrenches with Thru-Hole for Hi-Lok / Hi-Lite Collar & K-Fast Nuts




**Pre-Set Click-Type Torque Wrench Handles with Roller Ratchet® Heads!**

This unique torque wrench is great for hard to reach fasteners.

The Roller Ratchet® incorporates a toothless clutch that engages with virtually zero-backlash. Thus the head is effective where very limited handle movement is possible. Wrenches are small & light-weight and are available with 1/4'' square drives for 10 to 250 in-lbs applications, or with 3/8'' square drive for applications between 15 and 300 in-lbs torque.

The square drive is equipped with a thru-hole to accommodate Hex Keys. Various aircraft fastening systems require a hex-key to hold the 'Fastener Pin' while the nut is tightened with the wrench.

These wrenches have been designed to withstand the abuse of modern high production lines and at the same time deliver hundreds of thousands of accurate cycles, each one the same as the one before. These wrenches are made from high alloy steel and scientifically heat treated to deliver the results that are demanded of them. Absolute quality control is exercised during the manufacturing process, assembly process and final test and calibration operations.

| Part Number | Min Torque | Max Torque | Square Drive | Description |
|---|---|---|---|---|
| OMR2T1 | 10 in./lbs | 24 in./lbs | ¼” | Pre-set click type torque wrench with Roller Ratchet Head |
| OMR5T1 | 15 in./lbs | 60 in./lbs | ¼” | |
| OMR5T2 | 15 in./lbs | 60 in./lbs | 3/8” | |
| OMR10T1 | 36 in./lbs | 108 in./lbs | ¼” | |
| OMR10T2 | 36 in./lbs | 108 in./lbs | 3/8” | |
| OMR10ST1 | 84 in./lbs | 250 in./lbs | ¼” | |
| OMR10ST2 | 84 in./lbs | 300 in./lbs | 3/8” | |

# Hi-Lok Ratschen-Ringschlüssel
# HI-LOK BOX RATCHET WRENCH

Gerade Ausführung
**STRAIGHT TYPE**

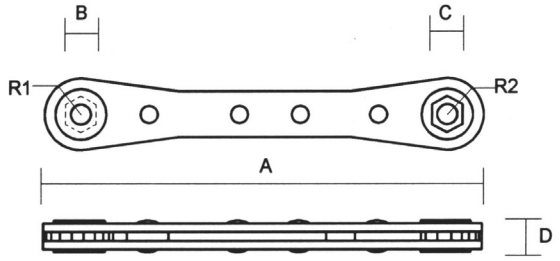


## ATBR
nicht umschaltbar / non-reversible

25° abgewinkelte Ausführung
**25° OFFSET TYPE**

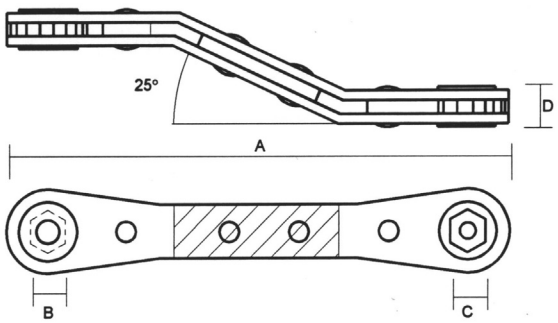


## ATBRO
umschaltbar / reversible

| **Artikel-Nr.** PART NO. | A | B | C | D | R1 | R2 |
|---|---|---|---|---|---|---|
| **ATBR-2125** | **4.1/4"** 108 mm | **7/32"** 5,56 mm | **1/4"** 6,35 mm | **3/8"** 9,53 mm | **19/64"** 7,54 mm | **21/64"** 8,33 mm |
| **ATBR-2528** | **4.1/4"** 108 mm | **1/4"** 6,35 mm | **9/32"** 7,14 mm | **3/8"** 9,53 mm | **19/64"** 7,54 mm | **21/64"** 8,33 mm |
| **ATBR-2531** | **4.1/4"** 108 mm | **1/4"** 6,35 mm | **5/16"** 7,94 mm | **3/8"** 9,53 mm | **19/64"** 7,54 mm | **21/64"** 8,33 mm |
| **ATBR-3134** | **4.1/4"** 108 mm | **5/16"** 7,94 mm | **11/32"** 8,73 mm | **3/8"** 9,53 mm | **19/64"** 7,54 mm | **21/64"** 8,33 mm |
| **ATBR-3137** | **5.1/2"** 140 mm | **5/16"** 7,94 mm | **3/8"** 9,53 mm | **3/8"** 9,53 mm | **25/64"** 9,92 mm | **29/64"** 11,51 mm |
| **ATBR-4350** | **5.1/2"** 140 mm | **7/16"** 11,11 mm | **1/2"** 12,7 mm | **3/8"** 9,53 mm | **25/64"** 9,92 mm | **29/64"** 11,51 mm |
| | | | | | | |
| **ATBRO-2125** | **4.3/32"** 104 mm | **7/32"** 5,56 mm | **1/4"** 6,35 mm | **3/8"** 9,53 mm | **19/64"** 7,54 mm | **21/64"** 8,33 mm |
| **ATBRO-2528** | **4.3/32"** 104 mm | **1/4"** 6,35 mm | **9/32"** 7,14 mm | **3/8"** 9,53 mm | **19/64"** 7,54 mm | **21/64"** 8,33 mm |
| **ATBRO-3134** | **4.3/32"** 104 mm | **5/16"** 7,94 mm | **11/32"** 8,73 mm | **3/8"** 9,53 mm | **19/64"** 7,54 mm | **21/64"** 8,33 mm |
| **ATBRO-3137** | **5.7/32"** 133 mm | **5/16"** 7,94 mm | **3/8"** 9,53 mm | **3/8"** 9,53 mm | **25/64"** 9,92 mm | **29/64"** 11,51 mm |
| **ATBRO-4350** | **5.7/32"** 133 mm | **7/16"** 11,11 mm | **1/2"** 12,7 mm | **3/8"** 9,53 mm | **25/64"** 9,92 mm | **29/64"** 11,51 mm |

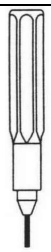

## 607

| **Artikel Nr.** PART NO. | **Stift-Größe** HEX KEY SIZE |
|---|---|
| **607-1/16"** | **1/16"** 1,59 mm |
| **607-5/64"** | **5/64"** 1,98 mm |
| **607-3/32"** | **3/32"** 2,38 mm |

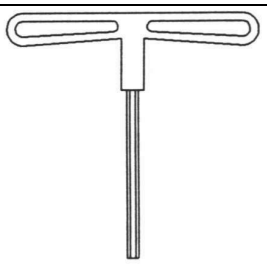

## 609

| **Artikel Nr.** PART NO. | **Stift-Größe** HEX KEY SIZE |
|---|---|
| **EH609-3/32"** | **3/32"** 2,38 mm |
| **EH609-1/8"** | **1/8"** 3,18 mm |
| **EH609-5/32"** | **5/32"** 3,97 mm |
| **EH609-3/16"** | **3/16"** 4,76 mm |

# Hi-Lok Ratschen-Ringschlüssel mit Auswerfer
# HI-LOK BOX RATCHET WRENCH WITH EJECTOR

Gerade Ausführung
**STRAIGHT TYPE**

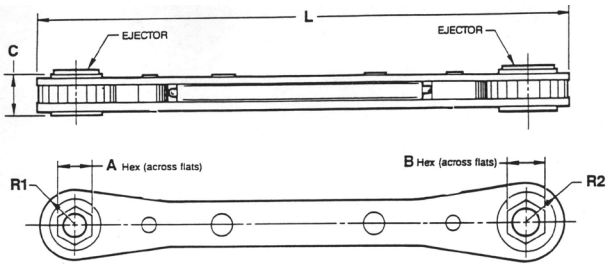


## ATBR-( )E
nicht umschaltbar / non-reversible

25° abgewinkelte Ausführung
**25° OFFSET TYPE**

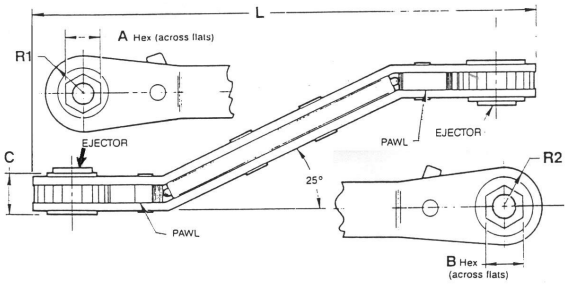


## ATBRO-( )E
umschaltbar / reversible

| **Artikel-Nr.** PART NO. | A | B | C | L | R1 | R2 |
|---|---|---|---|---|---|---|
| **ATBR-2125E** | **7/32"** 5,56 mm | **1/4"** 6,35 mm | **5/16"** 7,94 mm | **4.3/32"** 104 mm | **19/64"** 7,54 mm | **21/64"** 8,33 mm |
| **ATBR-2528E** | **1/4"** 6,35 mm | **9/32"** 7,14 mm | **3/8"** 9,53 mm | **4.3/32"** 104 mm | **19/64"** 7,54 mm | **21/64"** 8,33 mm |
| **ATBR-3134E** | **5/16"** 7,94 mm | **11/32"** 8,73 mm | **3/8"** 9,53 mm | **4.3/32"** 104 mm | **19/64"** 7,54 mm | **21/64"** 8,33 mm |
| **ATBR-3137E** | **5/16"** 7,94 mm | **3/8"** 9,53 mm | **3/8"** 9,53 mm | **5.7/32"** 133 mm | **25/64"** 9,92 mm | **29/64"** 11,51 mm |
| **ATBR-4350E** | **7/16"** 11,11 mm | **1/2"** 12,7 mm | **3/8"** 9,53 mm | **5.7/32"** 133 mm | **25/64"** 9,92 mm | **29/64"** 11,51 mm |
| | | | | | | |
| **ATBRO-2125E** | **7/32"** 5,56 mm | **1/4"** 6,35 mm | **5/16"** 7,94 mm | **4.3/32"** 104 mm | **19/64"** 7,54 mm | **21/64"** 8,33 mm |
| **ATBRO-2528E** | **1/4"** 6,35 mm | **9/32"** 7,14 mm | **3/8"** 9,53 mm | **4.3/32"** 104 mm | **19/64"** 7,54 mm | **21/64"** 8,33 mm |
| **ATBRO-3134E** | **5/16"** 7,94 mm | **11/32"** 8,73 mm | **3/8"** 9,53 mm | **4.3/32"** 104 mm | **19/64"** 7,54 mm | **21/64"** 8,33 mm |
| **ATBRO-3137E** | **5/16"** 7,94 mm | **3/8"** 9,53 mm | **3/8"** 9,53 mm | **5.7/32"** 133 mm | **25/64"** 9,92 mm | **29/64"** 11,51 mm |
| **ATBRO-4350E** | **7/16"** 11,11 mm | **1/2"** 12,7 mm | **3/8"** 9,53 mm | **5.7/32"** 133 mm | **25/64"** 9,92 mm | **29/64"** 11,51 mm |

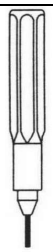

## 607

| **Artikel Nr.** PART NO. | **Stift-Größe** HEX KEY SIZE |
|---|---|
| **607-1/16"** | **1/16"** 1,59 mm |
| **607-5/64"** | **5/64"** 1,98 mm |
| **607-3/32"** | **3/32"** 2,38 mm |

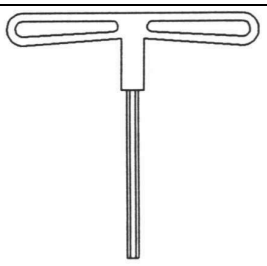

## 609

| **Artikel Nr.** PART NO. | **Stift-Größe** HEX KEY SIZE |
|---|---|
| **EH609-3/32"** | **3/32"** 2,38 mm |
| **EH609-1/8"** | **1/8"** 3,18 mm |
| **EH609-5/32"** | **5/32"** 3,97 mm |
| **EH609-3/16"** | **3/16"** 4,76 mm |

# Hi-Lok Schnellwechsel-Handeinbauwerkzeug
# HI-LOK QUICK CHANGE INSTALLATION HAND ASSEMBLY

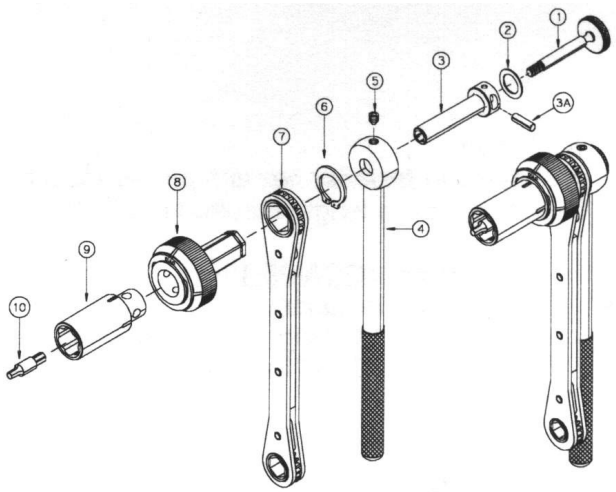

| | | |
|---|---|---|
| 1 | = Retention Shaft | QRS-(**E**) |
| 2 | = Nylon Washer | HNW100 |
| 3 | = Holder | QRH-(**E**) |
| 3A | = For use only in hand installation | Keeper Pin |
| 4 | = Handle | HLH350 |
| 5 | = Set Screw | HW103 |
| 6 | = Retaining Clip | HRC100 |
| 7 | = Ratchet Wrench | HLR-7 |
| 8 | = Quick Change Recepticle | QCR-281 |
| 9 | = Quick Change Installation Socket (**E**) | QCHS (**xxx**)- |
| 10 | = Hex Key | QRK-(**H**) |

| **kpl. Einbau-Steckschlüsselsatz**<br>CPL. INSTALLATION SOCKET ASSEMBLY | **Steckschlüssel, einzeln**<br>SOCKET ONLY | **Steckschlüssel-Größe**<br>SOCKET HEX SIZE |
|---|---|---|
| **Pos. / ITEM 1-10** | **Pos. / ITEM 9** | **(xxx)** |
| **QCHA 218-(E)-(H)** | **QCHS 218-(E)** | **7/32"** (.218) 5,56 mm |
| **QCHA 250-(E)-(H)** | **QCHS 250-(E)** | **1/4"** (.250) 6,35 mm |
| **QCHA 281-(E)-(H)** | **QCHS 281-(E)** | **9/32"** (.281) 7,14 mm |
| **QCHA 312-(E)-(H)** | **QCHS 312-(E)** | **5/16"** (.312) 7,94 mm |
| **QCHA 343-(E)-(H)** | **QCHS 343-(E)** | **11/32"** (.343) 8,73 mm |
| **QCHA 375-(E)-(H)** | **QCHS 375-(E)** | **3/8"** (.375) 9,53 mm |
| **QCHA 437-(E)-(H)** | **QCHS 437-(E)** | **7/16"** (.437) 11,11 mm |

**(E) = Bitte Kennzahl für Steckschlüssellänge lt. Tabelle angeben (Standard Länge ist 25,4 mm)**
(E) = PLEASE SPECIFY DASH # FOR SOCKET LENGTH AS PER TABLE (STANDARD LENGTH IS 1")

**(H) = Bitte Kennzahl für Stiftschlüssel-Größe lt. Tabelle angeben**
(H) = PLEASE SPECIFY DASH # FOR HEX KEY SIZE AS PER TABLE

| **(E)**<br>**Steckschlüssellänge**<br>SOCKET LENGTH<br>**Kennzahl** / DASH # | **Steckschlüssellänge**<br>SOCKET LENGTH<br>(**Pos.** / ITEM 9) |
|---|---|
| **10** | **1.0"** 25,40 mm |
| **20** | **2.0"** 50,80 mm |
| **30** | **3.0"** 76,20 mm |

| **Artikel-Nr.**<br>PART NO.<br>(**Pos.** / ITEM 10) | **(H)**<br>**Kennzahl**<br>DASH # | **Stiftschlüsselgröße**<br>HEX KEY SIZE |
|---|---|---|
| **QRK-5** | **5** | **1/16"** (.062) 1,59 mm |
| **QRK-6** | **6** | **5/64"** (.078) 1,98 mm |
| **QRK-8** | **8** | **3/32"** (.094) 2,38 mm |
| **QRK-10** | **10** | **1/8"** (.125) 3,18 mm |

# Hi-Lok Schnellwechsel-Steckschlüssel für den Einbau von Hi-Loks
# HI-LOK QUICK CHANGE SOCKET INSTALLATION ASSEMBLY

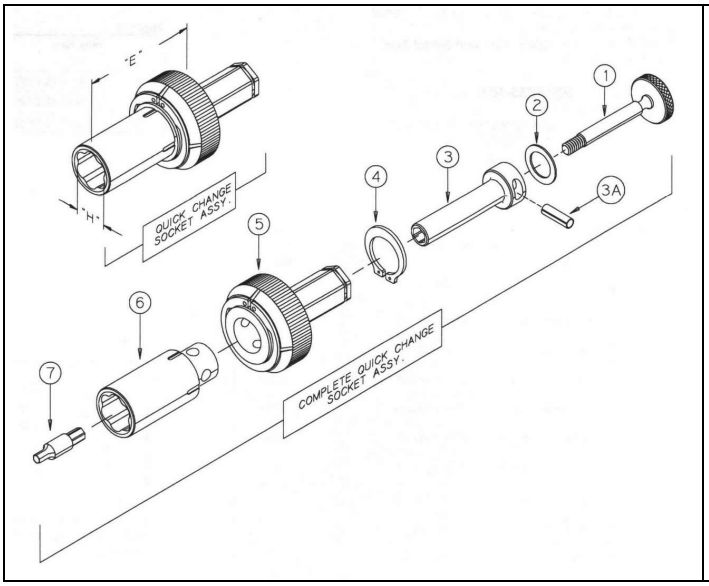


| | | |
|---|---|---|
| 1 = | Retention Shaft | QRS-(**E**) |
| 2 = | Nylon Washer | HNW100 |
| 3 = | Holder | QRH-(**E**) |
| 3A = | For use only in hand installation | Keeper Pin |
| 4 = | Retaining Clip | HRC-100 |
| 5 = | Quick Change Recepticle | QCR-281 |
| 6 = | Quick Change Installation Socket | QCHS(**xxx**)-(**E**) |
| 7 = | Hex Key | QRK-(**H**) |

| **kpl. Einbau-Steckschlüsselsatz**<br>CPL. INSTALLATION SOCKET ASSEMBLY | **Steckschlüssel, einzeln**<br>SOCKET ONLY | **Steckschlüssel-Größe**<br>SOCKET HEX SIZE |
|---|---|---|
| **Pos. / ITEM 1-7** | **Pos. / ITEM 6** | **(xxx)** |
| **QCA 218-(E)-(H)** | **QCHS 218-(E)** | **7/32"** (.218) 5,56 mm |
| **QCA 250-(E)-(H)** | **QCHS 250-(E)** | **1/4"** (.250) 6,35 mm |
| **QCA 281-(E)-(H)** | **QCHS 281-(E)** | **9/32"** (.281) 7,14 mm |
| **QCA 312-(E)-(H)** | **QCHS 312-(E)** | **5/16"** (.312) 7,94 mm |
| **QCA 343-(E)-(H)** | **QCHS 343-(E)** | **11/32"** (.343) 8,73 mm |
| **QCA 375-(E)-(H)** | **QCHS 375-(E)** | **3/8"** (.375) 9,53 mm |
| **QCA 437-(E)-(H)** | **QCHS 437-(E)** | **7/16"** (.437) 11,11 mm |

**(E) = Bitte Kennzahl für Steckschlüssellänge lt. Tabelle angeben (Standard Länge ist 25,4 mm)**
(E) = PLEASE SPECIFY DASH # FOR SOCKET LENGTH AS PER TABLE (STANDARD LENGTH IS 1")

**(H) = Bitte Kennzahl für Stiftschlüssel-Größe lt. Tabelle angeben**
(H) = PLEASE SPECIFY DASH # FOR HEX KEY SIZE AS PER TABLE

| **(E)**<br>**Steckschlüssellänge**<br>SOCKET LENGTH<br>**Kennzahl** / DASH # | **Steckschlüssellänge**<br>SOCKET LENGTH<br>(**Pos.** / ITEM 6) |
|---|---|
| **10** | **1.0"** 25,40 mm |
| **20** | **2.0"** 50,80 mm |
| **30** | **3.0"** 76,20 mm |

| **Artikel-Nr.**<br>PART NO.<br>(**Pos.** / ITEM 10) | **(H)**<br>**Kennzahl**<br>DASH # | **Stiftschlüsselgröße**<br>HEX KEY SIZE |
|---|---|---|
| **QRK-5** | **5** | **1/16"** (.062) 1,59 mm |
| **QRK-6** | **6** | **5/64"** (.078) 1,98 mm |
| **QRK-8** | **8** | **3/32"** (.094) 2,38 mm |
| **QRK-10** | **10** | **1/8"** (.125) 3,18 mm |

# Hi-Lok Schnellwechsel-Handausbauwerkzeug
# HI-LOK QUICK CHANGE REMOVAL HAND ASSEMBLY

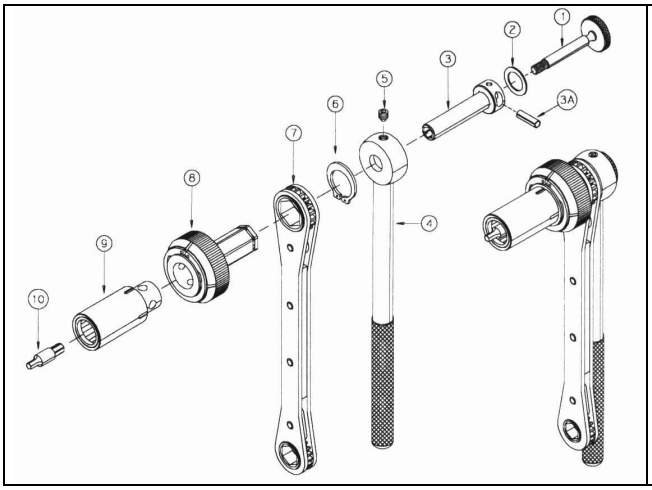

| | | | |
|---|---|---|---|
| 1 | = | Retention Shaft | QRS-10 |
| 2 | = | Nylon Washer | HNW100 |
| 3 | = | Holder | QRH-10 |
| 3A | = | For use only in hand installation | Keeper Pin |
| 4 | = | Handle | HLH350 |
| 5 | = | Set Screw | HW103 |
| 6 | = | Retaining Clip | HRC100 |
| 7 | = | Ratchet Wrench | HLR-7 |
| 8 | = | Quick Change Recepticle | QCR-281 |
| 9 | = | Quick Change Removal Socket | QCHR **(xxx)**-10 |
| 10 | = | Hex Key | QRK**-(H)** |

| **kpl. Ausbau-Steckschlüsselsatz** CPL. REMOVAL SOCKET ASSEMBLY | **Steckschlüssel einzeln** SOCKET ONLY | **Klemmbereich des Steckschlüssel** GRIP RANGE OF SOCKET | |
|---|---|---|---|
| **Artikel-Nr.** / PART NO. **Pos. / ITEM 1-10** | **Artikel-Nr.** / PART NO. **Pos. / ITEM 9** | **Inch** | **mm** |
| **QCHRA 235-10-(H)** | **QCHR 235-10** | 0.235-0.255 | 5,97-6,48 |
| **QCHRA 245-10-(H)** | **QCHR 245-10** | 0.245-0.265 | 6,22-6,73 |
| **QCHRA 255-10-(H)** | **QCHR 255-10** | 0.255-0.275 | 6,48-6,99 |
| **QCHRA 265-10-(H)** | **QCHR 265-10** | 0.265-0.285 | 6,73-7,24 |
| **QCHRA 275-10-(H)** | **QCHR 275-10** | 0.275-0.295 | 6,99-7,49 |
| **QCHRA 285-10-(H)** | **QCHR 285-10** | 0.285-0.305 | 7,24-7,75 |
| **QCHRA 295-10-(H)** | **QCHR 295-10** | 0.295-0.315 | 7,49-8,00 |
| **QCHRA 305-10-(H)** | **QCHR 305-10** | 0.305-0.325 | 7,75-8,26 |
| **QCHRA 315-10-(H)** | **QCHR 315-10** | 0.315-0.335 | 8,00-8,51 |
| **QCHRA 325-10-(H)** | **QCHR 325-10** | 0.325-0.345 | 8,26-8,76 |
| **QCHRA 335-10-(H)** | **QCHR 335-10** | 0.335-0.355 | 8,51-9,02 |
| **QCHRA 355-10-(H)** | **QCHR 355-10** | 0.355-0.375 | 9,02-9,53 |
| **QCHRA 375-10-(H)** | **QCHR 375-10** | 0.375-0.395 | 9,53-10,03 |
| **QCHRA 395-10-(H)** | **QCHR 395-10** | 0.395-0.415 | 10,03-10,54 |

**Standard-Länge (-10) ist 25,4 mm - Sonderlängen nur auf Anfrage**
STANDARD LENGTH (-10) IS 1" - SPECIAL LENGTH ONLY ON REQUEST

**(H) = Bitte Kennzahl für Stiftschlüssel-Größe lt. Tabelle angeben**
(H) = PLEASE SPECIFY DASH # FOR HEX KEY SIZE AS PER TABLE

| **Artikel-Nr.** / PART NO. (**Pos.** / ITEM 10) | **(H)** **Kennzahl** / DASH # | **Stiftschlüsselgröße** HEX KEY SIZE |
|---|---|---|
| **QRK-5** | **5** | **1/16"** (.062) 1,59 mm |
| **QRK-6** | **6** | **5/64"** (.078) 1,98 mm |
| **QRK-8** | **8** | **3/32"** (.094) 2,38 mm |
| **QRK-10** | **10** | **1/8"** (.125) 3,18 mm |

# Hi-Lok-Collar Schnellwechsel-Steckschlüssel Ausbau-System
# HI-LOK-COLLAR QUICK CHANGE SOCKET REMOVAL SYSTEM

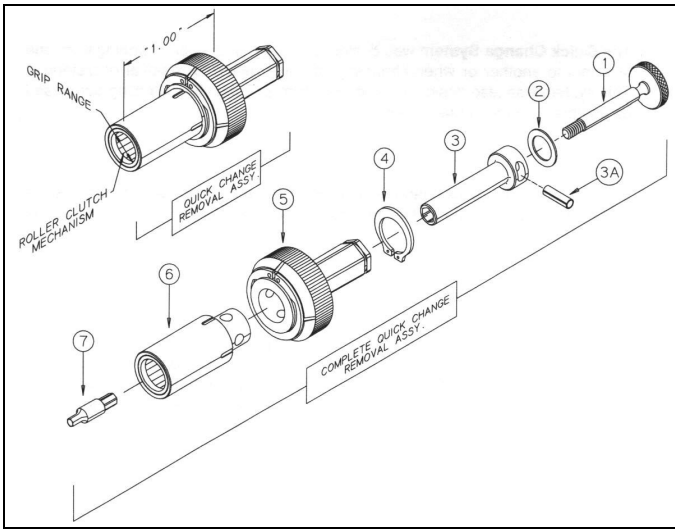


| | | |
|---|---|---|
| 1 | = Retention Shaft | QRS-10 |
| 2 | = Nylon Washer | HNW100 |
| 3 | = Holder | QRH-10 |
| 3A | = For use only in hand installation | Keeper Pin |
| 4 | = Retaining Clip | HRC-100 |
| 5 | = Quick Change Recepticle | QCR-281 |
| 6 | = Quick Change Removal Socket | QCHRS(**xxx**)-10 |
| 7 | = Hex Key | QRK-(**H**) |

| **kpl. Ausbau-Steckschlüssel**<br>CPL. REMOVAL SOCKET ASSEMBLY | **Steckschlüssel einzeln**<br>SOCKET ONLY | **Klemmbereich des Steckschlüssel**<br>GRIP RANGE OF SOCKET | |
|---|---|---|---|
| **Pos. / ITEM 1-7** | **Pos. / ITEM 6** | **Inch** | **mm** |
| **QCRA 235-10-(H)** | **QCHR 235-10** | 0.235-0.255 | 5,97-6,48 |
| **QCRA 245-10-(H)** | **QCHR 245-10** | 0.245-0.265 | 6,22-6,73 |
| **QCRA 255-10-(H)** | **QCHR 255-10** | 0.255-0.275 | 6,48-6,99 |
| **QCRA 265-10-(H)** | **QCHR 265-10** | 0.265-0.285 | 6,73-7,24 |
| **QCRA 275-10-(H)** | **QCHR 275-10** | 0.275-0.295 | 6,99-7,49 |
| **QCRA 285-10-(H)** | **QCHR 285-10** | 0.285-0.305 | 7,24-7,75 |
| **QCRA 295-10-(H)** | **QCHR 295-10** | 0.295-0.315 | 7,49-8,00 |
| **QCRA 305-10-(H)** | **QCHR 305-10** | 0.305-0.325 | 7,75-8,26 |
| **QCRA 315-10-(H)** | **QCHR 315-10** | 0.315-0.335 | 8,00-8,51 |
| **QCRA 325-10-(H)** | **QCHR 325-10** | 0.325-0.345 | 8,26-8,76 |
| **QCRA 335-10-(H)** | **QCHR 335-10** | 0.335-0.355 | 8,51-9,02 |
| **QCRA 355-10-(H)** | **QCHR 355-10** | 0.355-0.375 | 9,02-9,53 |
| **QCRA 375-10-(H)** | **QCHR 375-10** | 0.375-0.395 | 9,53-10,03 |
| **QCRA 395-10-(H)** | **QCHR 395-10** | 0.395-0.415 | 10,03-10,54 |

**Standard-Länge ist 25,4 mm - Sonderlängen nur auf Anfrage**
STANDARD LENGTH IS 1" - SPECIAL LENGTH ONLY ON REQUEST

**(H) = Bitte Kennnzahl für Stiftschlüssel-Größe lt. Tabelle angeben**
(H) = PLEASE SPECIFY DASH # FOR HEX KEY SIZE AS PER TABLE

| **Artikel-Nr.** / PART NO.<br>(**Pos.** / ITEM 7) | **(H)**<br>**Kennzahl** / DASH # | **Stiftschlüsselgröße**<br>HEX KEY SIZE |
|---|---|---|
| **QRK-5** | **5** | **1/16"** (.062) 1,59 mm |
| **QRK-6** | **6** | **5/64"** (.078) 1,98 mm |
| **QRK-8** | **8** | **3/32"** (.094) 2,38 mm |
| **QRK-10** | **10** | **1/8"** (.125) 3,18 mm |

# Hi-Lok Einbau-Werkzeugsatz
HI-LOK INSTALLATION TOOL KIT

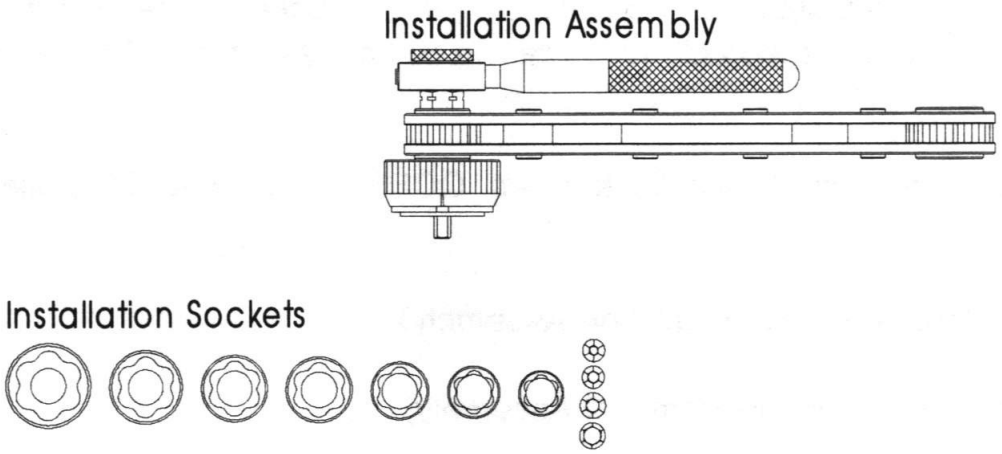


## QCK-4050

| **Inhalt /** CONTENTS: | **Artikel-Nr.** PART NO. |
|---|---|
| **Aufbewahrungskasten** / CASE | **---** |
| **Hand-Einbauwerkzeug mit Adapter für Steckschlüssel** HAND-INSTALLATION TOOL WITH RECEPTICLE FOR SOCKETS | **QCHA932** |
| **Einbau-Steckschlüsselsatz (7 tlg.) inkl. 4 QRK-Stiftschlüssel** Installation Socket Set (7 pcs.) incl. 4 QRK Hex-Keys | **QCSS22-43-10** |

| **QCSS 22-43-10** **bestehend aus/**EXIST OF: **Einbau-Steckschlüssel** INSTALLATION SOCKET | **Größe** HEX SIZE | | | **Stiftschlüssel** HEX KEY |
|---|---|---|---|---|
| **QCHS 218-10** | **7/32"** | (.218) | 5,56 mm | **QRK-5** (1/16") |
| **QCHS 250-10** | **1/4"** | (.250) | 6,35 mm | **QRK-6** (5/64") |
| **QCHS 281-10** | **9/32"** | (.281) | 7,14 mm | **QRK-8** (3/32") |
| **QCHS 312-10** | **5/16"** | (.312) | 7,94 mm | **QRK-10** (1/8") |
| **QCHS 343-10** | **11/32"** | (.343) | 8,73 mm | |
| **QCHS 375-10** | **3/8"** | (.375) | 9,53 mm | |
| **QCHS 437-10** | **7/16"** | (.437) | 11,11 mm | |

**Standard Steckschlüssellänge ist 25,4 mm -** STANDARD SOCKET LENGTH IS 1"

# Hi-Lok Ausbau-Werkzeugsatz
HI-LOK REMOVAL TOOL KIT

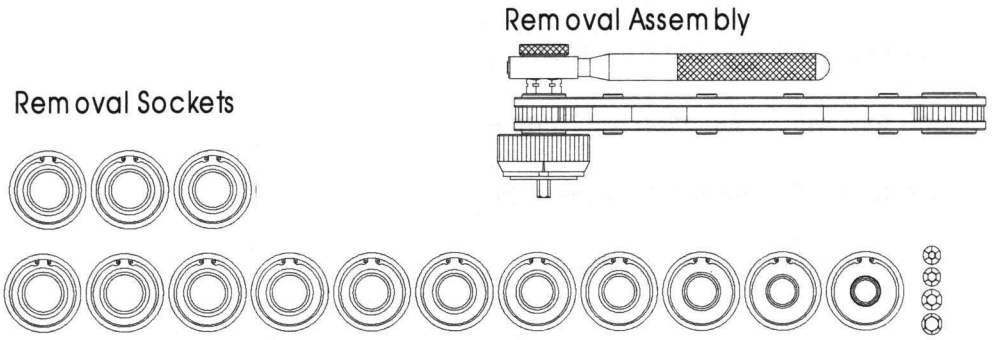


## QCK-4060

| **Inhalt /** CONTENTS: | **Artikel-Nr.** PART NO. |
|---|---|
| **Aufbewahrungskasten** / CASE | --- |
| **Hand-Ausbauwerkzeug mit Adapter für Steckschlüssel** HAND-REMOVAL TOOL WITH RECEPTICLE FOR SOCKETS | **QCHRA932** |
| **Ausbau-Steckschlüsselsatz (14 tlg.) inkl. 4 QRK-Stiftschlüssel** Removal Socket Set (14 pcs.) incl. 4 QRK Hex-Keys | **QCRSS23-43** |

| **QCRSS 23-43** **bestehend aus/**EXIST OF: **Ausbau-Steckschlüssel** REMOVAL SOCKET | **Klemmbereich des Steckschlüssel** GRIP RANGE OF SOCKET | | | **Stiftschlüssel** HEX KEY |
|---|---|---|---|---|
| | **Inch** | **mm** | | |
| **QCHR 235-10** | 0.235-0.255 | 5,97-6,48 | | |
| **QCHR 245-10** | 0.245-0.265 | 6,22-6,73 | | **QRK-5** (1/16") |
| **QCHR 255-10** | 0.255-0.275 | 6,48-6,99 | | **QRK-6** (5/64") |
| **QCHR 265-10** | 0.265-0.285 | 6,73-7,24 | | **QRK-8** (3/32") |
| **QCHR 275-10** | 0.275-0.295 | 6,99-7,49 | | **QRK-10** (1/8") |
| **QCHR 285-10** | 0.285-0.305 | 7,24-7,75 | | |
| **QCHR 295-10** | 0.295-0.315 | 7,49-8,00 | | |
| **QCHR 305-10** | 0.305-0.325 | 7,75-8,26 | | |
| **QCHR 315-10** | 0.315-0.335 | 8,00-8,51 | | |
| **QCHR 325-10** | 0.325-0.345 | 8,26-8,76 | | |
| **QCHR 335-10** | 0.335-0.355 | 8,51-9,02 | | |
| **QCHR 355-10** | 0.355-0.375 | 9,02-9,53 | | |
| **QCHR 375-10** | 0.375-0.395 | 9,53-10,03 | | |
| **QCHR 395-10** | 0.395-0.415 | 10,03-10,54 | | |

**Standard Steckschlüssellänge ist 25,4 mm** - STANDARD SOCKET LENGTH IS 1"

# Hi-Lok Ein- und Ausbau-Werkzeugsatz
# HI-LOK INSTALLATION & REMOVAL TOOL KIT

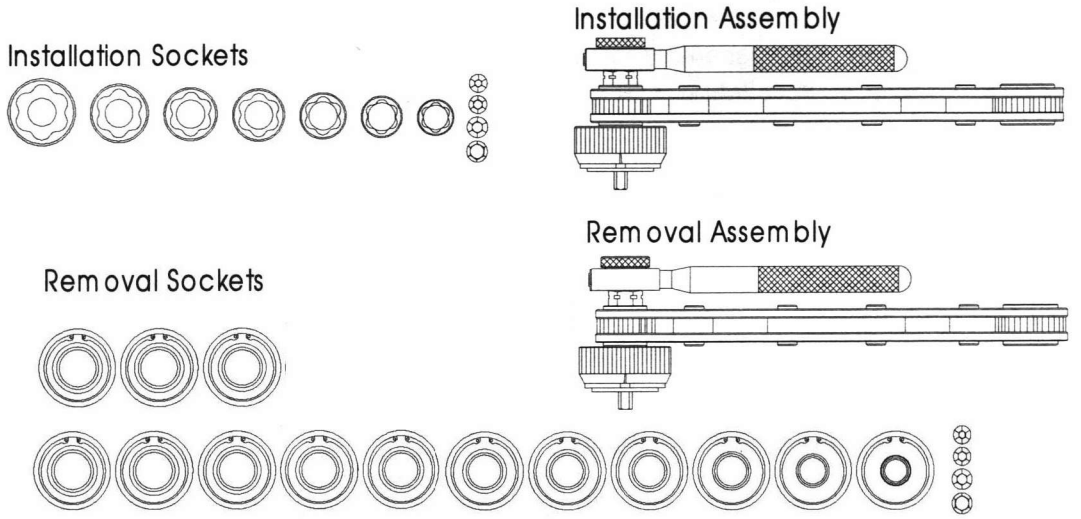


## QCK-4040

| **Inhalt /** CONTENTS: | |
|---|---|
| **Hand-Einbauwerkzeug mit Adapter für Steckschlüssel**<br>HAND-INSTALLATION TOOL WITH RECEPTICLE FOR SOCKETS | **QCHA932** |
| **Hand-Ausbauwerkzeug mit Adapter für Steckschlüssel**<br>HAND-REMOVAL TOOL WITH RECEPTICLE FOR SOCKETS | **QCHRA932** |
| **Einbau-Steckschlüsselsatz (7 tlg.) inkl. 4 QRK-Stiftschlüssel**<br>Installation Socket Set (7 pcs.) incl. 4 QRK Hex-Keys | **QCSS22-43-10** |
| **Ausbau-Steckschlüsselsatz (14 tlg.) inkl. 4 QRK-Stiftschlüssel**<br>Removal Socket Set (14 pcs.) incl. 4 QRK Hex-Keys | **QCRSS23-43** |

| **QCSS 22-43-10**<br>**bestehend aus/**EXIST OF:<br>**Einbau-Steckschlüssel**<br>INSTALLATION SOCKET | **Größe**<br>HEX SIZE |
|---|---|
| **QCHS 218-10** | **7/32"** (.218) 5,56 mm |
| **QCHS 250-10** | **1/4"** (.250) 6,35 mm |
| **QCHS 281-10** | **9/32"** (.281) 7,14 mm |
| **QCHS 312-10** | **5/16"** (.312) 7,94 mm |
| **QCHS 343-10** | **11/32"** (.343) 8,73 mm |
| **QCHS 375-10** | **3/8"** (.375) 9,53 mm |
| **QCHS 437-10** | **7/16"** (.437) 11,11 mm |

| **Stiftschlüssel** / HEX KEY | **Größe** / HEX SIZE |
|---|---|
| **QRK-5** | 1/16" |
| **QRK-6** | 5/64" |
| **QRK-8** | 3/32" |
| **QRK-10** | 1/8" |

| **QCRSS 23-43**<br>**bestehend aus/**EXIST OF:<br>**Ausbau-Steckschlüssel**<br>REMOVAL SOCKET | **Klemmbereich des Steckschlüssel**<br>GRIP RANGE OF SOCKET<br>**Inch** | **mm** |
|---|---|---|
| **QCHR 235-10** | 0.235-0.255 | 5,97-6,48 |
| **QCHR 245-10** | 0.245-0.265 | 6,22-6,73 |
| **QCHR 255-10** | 0.255-0.275 | 6,48-6,99 |
| **QCHR 265-10** | 0.265-0.285 | 6,73-7,24 |
| **QCHR 275-10** | 0.275-0.295 | 6,99-7,49 |
| **QCHR 285-10** | 0.285-0.305 | 7,24-7,75 |
| **QCHR 295-10** | 0.295-0.315 | 7,49-8,00 |
| **QCHR 305-10** | 0.305-0.325 | 7,75-8,26 |
| **QCHR 315-10** | 0.315-0.335 | 8,00-8,51 |
| **QCHR 325-10** | 0.325-0.345 | 8,26-8,76 |
| **QCHR 335-10** | 0.335-0.355 | 8,51-9,02 |
| **QCHR 355-10** | 0.355-0.375 | 9,02-9,53 |
| **QCHR 375-10** | 0.375-0.395 | 9,53-10,03 |
| **QCHR 395-10** | 0.395-0.415 | 10,03-10,54 |

**Standard Steckschlüssellänge ist 25,4 mm -** STANDARD SOCKET LENGTH IS 1"

# Hi-Lok Collar Ausbau-Werkzeuge
HI-LOK COLLAR REMOVAL TOOLS

## SAVI SOCKET





**SAVI-568-RED**

Hi-Lok® 6-piece Set (¼" Sq. Dr.)

This is a "Starter Set" that contains Savi-Sockets for 75-85% of the Hi-Lok® collars typically encountered in routine aircraft maintenance, including the most frequently encountered collars: the HL70, and the HL79 series "red" collars. This set will remove a number of other collars, but is not as comprehensive as the set below.

**SAVI-568-HL**

Hi-Lok® and Hi-Lite® 12-piece Set (¼" Sq. Dr.)

This is the comprehensive set of Savi-Sockets, providing sizes for the majority of Hi-Lok® and Hi-Lite® collars.

| SAVI-568-RED (6-piece set) | SAVI-568-HL (12 piece set) | Nominal Collar Size | Collar "Dash" Number | Square Drive Size | Top of Collar Diamter | |
|---|---|---|---|---|---|---|
| | | | | | MM | INCH |
| | SAVI-24 | 5/32, 3/16"EB | 5 & 6 EB | 1/4" | 6,2 mm | 0.24 |
| SAVI-25 | SAVI-25 | 5/32" | 5 | 1/4" | 6,5 mm | 0.25 |
| SAVI-26 | SAVI-26 | 5/32 & 3/16 | 5, 6 | 1/4" | 6,7 mm | 0.26 |
| SAVI-27 | SAVI-27 | 5/32 & 3/17 | 5, 6 | 1/4" | 7,0 mm | 0.27 |
| | SAVI-28 | 3/16" | 6 | 1/4" | 7,2 mm | 0.28 |
| SAVI-29 | SAVI-29 | 3/16" | 6 | 1/4" | 7,5 mm | 0.29 |
| | SAVI-32 | 1/4", 1/4EB | 8 & 8 EB | 1/4" | 8,2 mm | 0.32 |
| | SAVI-33 | 1/4" | 8 | 1/4" | 8,5 mm | 0.33 |
| | SAVI-34 | 1/4" | 8 | 1/4" | 8,7 mm | 0.34 |
| | SAVI-35 | 1/4" | 8 | 1/4" | 9,0 mm | 0.35 |
| SAVI-36 | SAVI-36 | 1/4" | 8 | 1/4" | 9,2 mm | 0.36 |
| SAVI-37 | SAVI-37 | 1/4" | 8 | 1/4" | 9,5 mm | 0.37 |



# Hi-Lok Collar Ausbau-Werkzeuge
# HI-LOK COLLAR REMOVAL TOOLS

**Mit Innenvierkant-Aufnahme 9,53 mm** / WITH 3/8" INSIDE SQUARE DRIVE

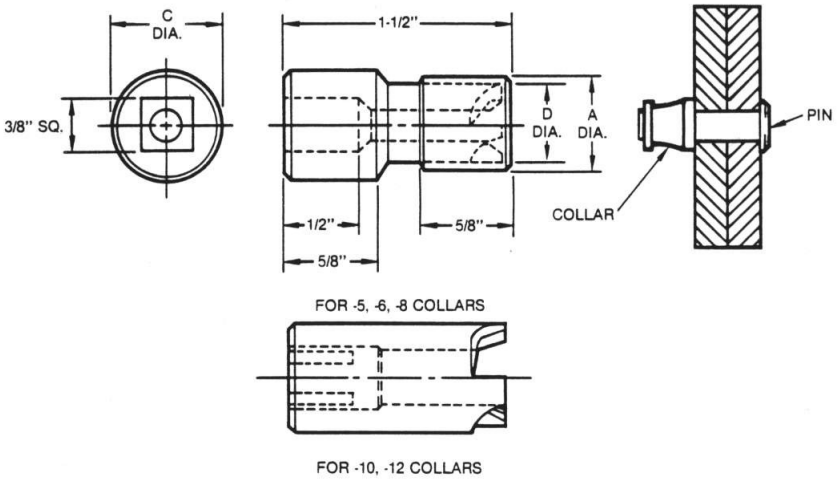


## HLC1

| Artikel-Nr. PART NO. | Größen-Nr. DASH NO. | Nenngröße PIN NOM. DIA. | A | | C | | D | |
|---|---|---|---|---|---|---|---|---|
| **HLC1-5** | **-5** | **5/32"** (4,0 mm) | **5/8"** | 15,88 mm | **3/4"** | 19,05 mm | **1/2"** | 12,70 mm |
| **HLC1-6** | **-6** | **3/16"** (4,8 mm) | **5/8"** | 15,88 mm | **3/4"** | 19,05 mm | **1/2"** | 12,70 mm |
| **HLC1-8** | **-8** | **1/4"** (6,4 mm) | **13/16"** | 20,64 mm | **3/4"** | 19,05 mm | **11/16"** | 17,46 mm |
| **HLC1-10** | **-10** | **5/16"** (8,0 mm) | | --- | **3/4"** | 19,05 mm | **3/4"** | 19,05 mm |
| **HLC1-12** | **-12** | **3/8"** (9,5 mm) | | --- | **7/8"** | 22,23 mm | **7/8"** | 22,23 mm |

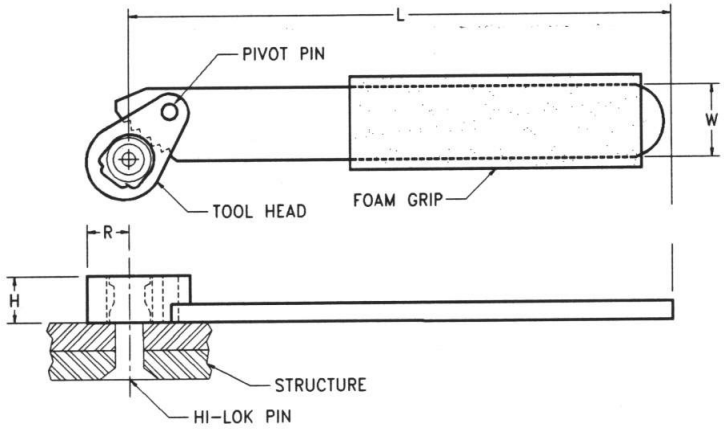


## REM100

| Artikel-Nr. PART NO. | Größen-Nr. DASH NO. | Nenngröße PIN NOM. DIA. | H | | R | | L | | W | |
|---|---|---|---|---|---|---|---|---|---|---|
| **REM100-56T** | **-5** | **5/32"** (4,0 mm) | **0.25** | 6,35 mm | **0.28** | 7,11 mm | **5.60** | 142,2 mm | **0.42** | 10,67 mm |
| **REM100-56T** | **-6** | **3/16"** (4,8 mm) | **0.25** | 6,35 mm | **0.28** | 7,11 mm | **5.60** | 142,2 mm | **0.42** | 10,67 mm |
| **REM100-8T** | **-8** | **1/4"** (6,4 mm) | **0.31** | 7,87 mm | **0.35** | 8,89 mm | **5.80** | 147,3 mm | **0.55** | 13,97 mm |
| **REM100-10T** | **-10** | **5/16"** (8,0 mm) | **0.38** | 9,65 mm | **0.43** | 10,92 mm | **6.90** | 175,3 mm | **0.67** | 17,02 mm |
| **REM100-12T** | **-12** | **3/8"** (9,5 mm) | **0.38** | 9,65 mm | **0.55** | 14,03 mm | **7.90** | 200,7 mm | **0.75** | 19,05 mm |
| **REM100-14T** | **-14** | **7/16"** (11,0 mm) | **0.50** | 12,70 mm | **0.61** | 15,49 mm | **9.90** | 251,5 mm | **0.95** | 24,13 mm |

# Hi-Lok Collar Ausbau-Zangen
# HI-LOK COLLAR REMOVAL PLIERS



## 2979D-180

| | |
|---|---|
| **Gesamtlänge ca. 180 mm**<br>OVERALL LENGTH APPR. 7.1/4 INCH<br><br>**Für Collar ab 4,0 mm Außendurchmesser**<br>**FOR COLLAR WITH MIN. 5/32" OUTSIDE DIAMETER** | **Nur für weiche Werkstoffe wie Aluminium und weicher Stahl**<br>ONLY FOR SOFT MATERIALS SUCH AS ALUMINIUM AND MILD STEEL |



## EH-3579 (ZHP-100)

| | |
|---|---|
| **Gesamtlänge ca. 180 mm**<br>OVERALL LENGTH APPR. 7.1/4 INCH<br><br>**Für Collar ab 6,3 mm Außendurchmesser**<br>FOR COLLAR WITH MIN. 1/4" OUTSIDE DIAMETER | **Alle weichen und harten Werkstoffe wie Aluminium, Titan und Edelstahl**<br>ALL MATERIALS SUCH AS ALUMINIUM, TITANIUM AND STAINLESS STEEL |



## ZHP-200

| | |
|---|---|
| **Gesamtlänge ca. 225 mm**<br>OVERALL LENGTH APPR. 8.27/32 INCH<br><br>**Für Collar ab 12,5 mm Außendurchmesser**<br>FOR COLLAR WITH MIN. 1/2" OUTSIDE DIAMETER | **Alle weichen und harten Werkstoffe wie Aluminium, Titan und Edelstahl**<br>ALL MATERIALS SUCH AS ALUMINIUM, TITANIUM AND STAINLESS STEEL |

# Hi-Lok / Hi-Lite Handeinbauwerkzeuge mit Drehmomentsteuerung
# HI-LOK / HI-LITE INSTALLATION TOOLS WITH TORQUE CONTROL

**Tools Configurations:**
The Lok-Fast Torque Control Tools come in several configurations allowing for the operator to choose the tool best designed for his needs.

**Versatility:**
All the heads are designed to be 360 degree indexable and give a consitant torque at any angle.

**Ease of Use:**
The QRS® Sockets allow for the quick and easy installation and removal of the hex tip with out the need for any other tooling. This eliminates excess down time and keeps the tool on the job longer.

**Indexing Feature:**
The tools are fully indexable (360°). No extra tooling is required to utilize the indexing mechanism, allowing for quick adjustments and increased versatility.

**LTC12, LTC13 & LTC14 Series***



**LTC22, LTC23 & LTC24 Series***



**LTC300 Series***



**LTC42, LTC43 & LTC44 Series***



**LTC52, LTC53 & LTC54 Series***



**LTC600 Series***



## Cordless Electric Tooling Systems

**New Cordless Electric tools with Torque Control Fastening bring to you the following benefits:**

- Ergonomic
- Convenience
- Accuracy
- Wide range of process monitoring at real time capabilities
- Different Tool Brands as Makita, Atlas Copco, Ingersoll-Rand and Bosch

**LTCB Series**



**Torque Rating:**
**T2 = 15 to 25**
**T3 = 26 to 55**
**T4 = 40 to 80**
**T5 = 80 to 120**

**Weitere Informationen auf Anfrage**
MORE INFORMATION ON REQUEST

**Quick Release System**
For use with **LTC600** Series
(Right Angle)



| H | Head Offset |
|---|---|
| 3 | 0.95" |
| 5 | 2.10" |
| 7 | 3.44" |
| 9 | 4.78" |

| T | Torque Range |
|---|---|
| T2 | 15 to 25 in - lbs |
| T3 | 26 to 55 in - lbs |
| T4 | 40 to 80 in - lbs |
| T5 | 80 to 120 in - lbs |

| Hex Tip | Socket Hex |
|---|---|
| 1/16 | 7/32<br>1/4<br>9/32<br>5/16<br>11/32 |
| 5/64 | 7/32<br>1/4<br>9/32<br>5/16<br>11/32<br>3/8 |
| 3/32 | 5/16<br>11/32<br>3/8<br>7/16 |

| X | Socket Length |
|---|---|
| - | flush |
| B | 0.5" |
| D | 1.0" |
| F | 1.5" |
| H | 2.0" |
| L | 3.0" |
| P | 4.0" |

**Ordering example:**
1. Select Basic Tool
2. Select the Head Offset required (H) **
3. Select Nut Setting Torque (T)
4. Select the Socket Hex Size
5. Select the Socket Length required (x)
6. Select the Hex Tip required
7. Combine Part Numbers as Shown Below

**LTC125T2-25B5**
(Example Extended socket)
1. **LTC12** - Basic Tool
2. **5** - 2.10" Offset **
3. **T2** - 15 to 25 in-lbs. Torque Range
4. **25** - 1/4" Socket Hex
5. **B** - 1/2" Long Extended Socket
6. **5** - 1/16" Hex Tip

**Available also with Aster Key**

*** Head Offset, Torque Range and Socket Length are different for each series. Please request complete series datasheet before ordering!**

**** Tools with Head Offset only**

# Hi-Lok Einbau-Werkzeugsatz
## HI-LOK INSTALLATION TOOL KIT

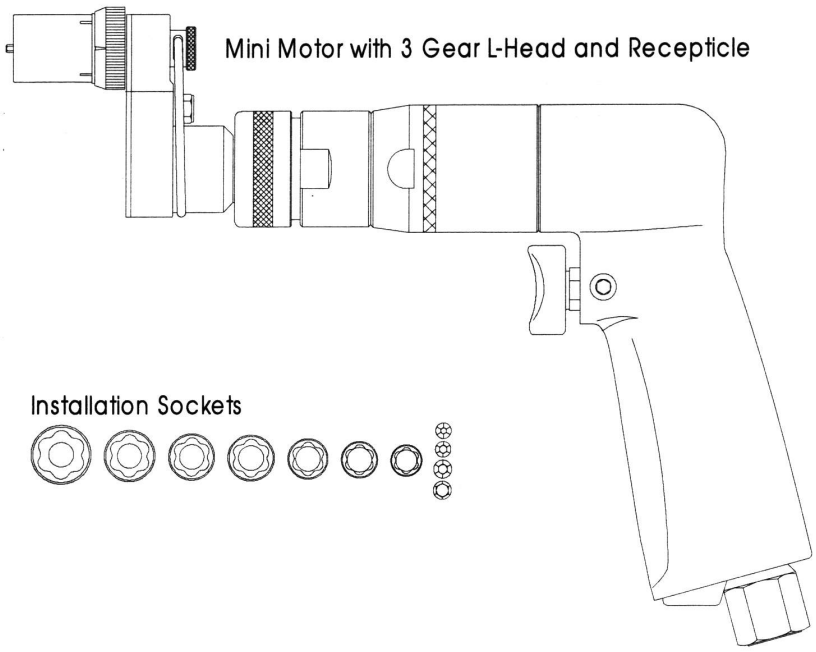


**QCK-4020**

| **Inhalt /** CONTENTS: | **Artikel-Nr.** PART NO. |
|---|---|
| **Aufbewahrungskasten** / CASE | --- |
| **Pneum. Mini Schrauber mit kleinem Winkelkopf und Adapter für Steckschlüssel** PNEUM. MINI MOTOR WITH 3 GEAR L-HEAD AND RECEPTICLE FOR SOCKETS | **MQCLA43S-10** |
| **Einbau-Steckschlüsselsatz (7 tlg.) inkl. 4 QRK-Stiftschlüssel** Installation Socket Set (7 pcs.) incl. 4 QRK Hex-Keys | **QCSS22-43-10** |

| **QCSS 22-43-10** **bestehend aus/**EXIST OF: **Einbau-Steckschlüssel** INSTALLATION SOCKET | **Größe** HEX SIZE | **Stiftschlüssel** HEX KEY |
|---|---|---|
| **QCHS 218-10** | **7/32"** (.218) 5,56 mm | **QRK-5** (1/16") |
| **QCHS 250-10** | **1/4"** (.250) 6,35 mm | **QRK-6** (5/64") |
| **QCHS 281-10** | **9/32"** (.281) 7,14 mm | **QRK-8** (3/32") |
| **QCHS 312-10** | **5/16"** (.312) 7,94 mm | **QRK-10** (1/8") |
| **QCHS 343-10** | **11/32"** (.343) 8,73 mm | |
| **QCHS 375-10** | **3/8"** (.375) 9,53 mm | |
| **QCHS 437-10** | **7/16"** (.437) 11,11 mm | |

**Standard Steckschlüssellänge ist 25,4 mm** STANDARD SOCKET LENGTH IS 1"

# Hi-Lok Ausbau-Werkzeugsatz
## HI-LOK REMOVAL TOOL KIT

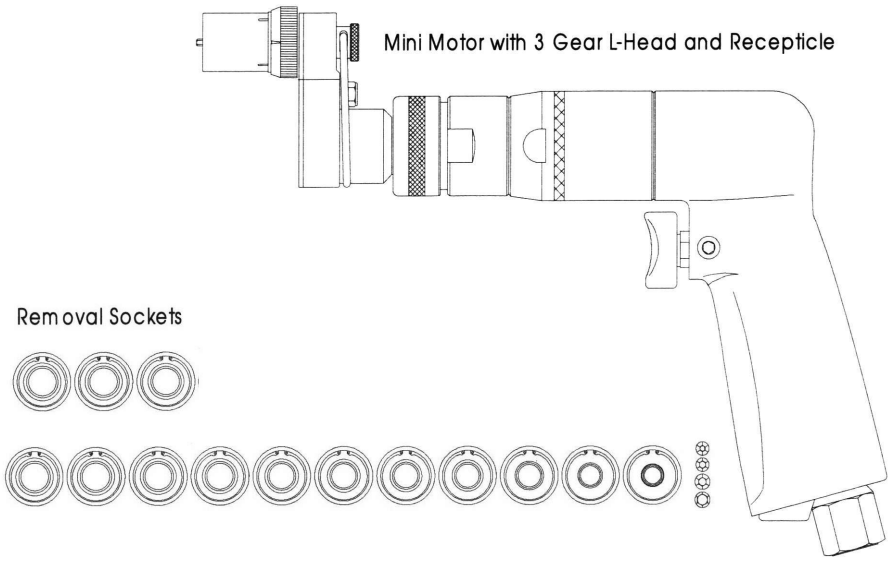


**QCK-4030**

| **Inhalt /** CONTENTS: | **Artikel-Nr.** PART NO. |
|---|---|
| **Aufbewahrungskasten** / CASE | --- |
| **Pneum. Mini Schrauber mit kleinem Winkelkopf und Adapter für Steckschlüssel** PNEUM. MINI MOTOR WITH 3 GEAR L-HEAD AND RECEPTICLE FOR SOCKETS | **MQCLA43S-10** |
| **Ausbau-Steckschlüsselsatz (14 tlg.) inkl. 4 QRK-Stiftschlüssel** Removal Socket Set (14 pcs.) incl. 4 QRK Hex-Keys | **QCRSS23-43** |

| **QCRSS 23-43** **bestehend aus/**EXIST OF: **Ausbau-Steckschlüssel** REMOVAL SOCKET | **Klemmbereich des Steckschlüssel** GRIP RANGE OF SOCKET | | **Stiftschlüssel** HEX KEY |
|---|---|---|---|
| | **Inch** | **mm** | |
| **QCHR 235-10** | 0.235-0.255 | 5,97-6,48 | |
| **QCHR 245-10** | 0.245-0.265 | 6,22-6,73 | **QRK-5** (1/16") |
| **QCHR 255-10** | 0.255-0.275 | 6,48-6,99 | **QRK-6** (5/64") |
| **QCHR 265-10** | 0.265-0.285 | 6,73-7,24 | **QRK-8** (3/32") |
| **QCHR 275-10** | 0.275-0.295 | 6,99-7,49 | **QRK-10** (1/8") |
| **QCHR 285-10** | 0.285-0.305 | 7,24-7,75 | |
| **QCHR 295-10** | 0.295-0.315 | 7,49-8,00 | |
| **QCHR 305-10** | 0.305-0.325 | 7,75-8,26 | |
| **QCHR 315-10** | 0.315-0.335 | 8,00-8,51 | |
| **QCHR 325-10** | 0.325-0.345 | 8,26-8,76 | |
| **QCHR 335-10** | 0.335-0.355 | 8,51-9,02 | |
| **QCHR 355-10** | 0.355-0.375 | 9,02-9,53 | |
| **QCHR 375-10** | 0.375-0.395 | 9,53-10,03 | |
| **QCHR 395-10** | 0.395-0.415 | 10,03-10,54 | |

**Standard Steckschlüssellänge ist 25,4 mm** - STANDARD SOCKET LENGTH IS 1"

# Hi-Lok Ein- und Ausbau-Werkzeugsatz
## HI-LOK INSTALLATION & REMOVAL TOOL KIT

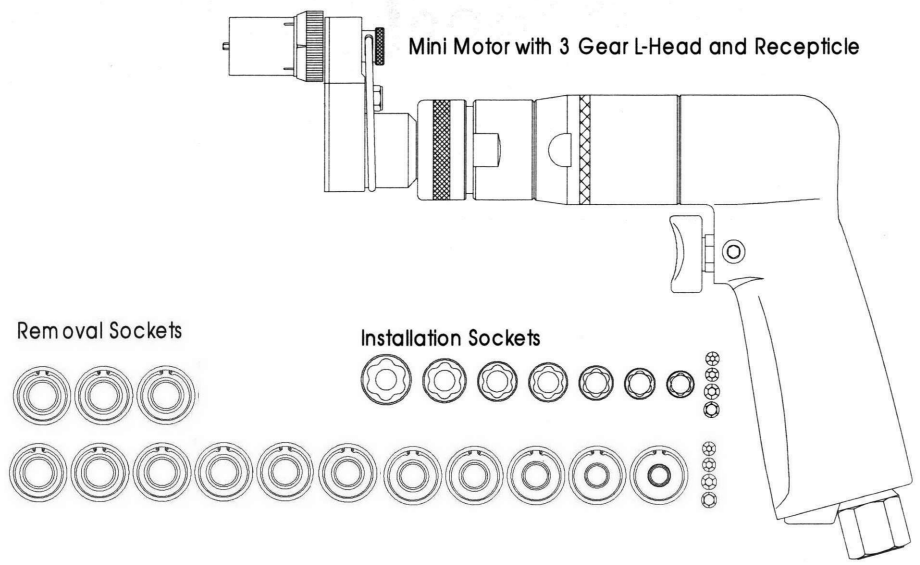


# QCK-4010

| **Inhalt** / CONTENTS: | **Artikel-Nr.** PART NO. |
|---|---|
| **Aufbewahrungskasten** / CASE | --- |
| **Pneum. Mini Schrauber mit kleinem Winkelkopf und Adapter für Steckschlüssel** PNEUM. MINI MOTOR WITH 3 GEAR L-HEAD AND RECEPTICLE FOR SOCKETS | **MQCLA43S-10** |
| **Einbau-Steckschlüsselsatz (7 tlg.) inkl. 4 QRK-Stiftschlüssel** Installation Socket Set (7 pcs.) incl. 4 QRK Hex-Keys | **QCSS22-43-10** |
| **Ausbau-Steckschlüsselsatz (14 tlg.) inkl. 4 QRK-Stiftschlüssel** Removal Socket Set (14 pcs.) incl. 4 QRK Hex-Keys | **QCRSS23-43** |

| **QCSS 22-43-10** **bestehend aus**/EXIST OF: **Einbau-Steckschlüssel** INSTALLATION SOCKET | **Größe** HEX SIZE |
|---|---|
| **QCHS 218-10** | **7/32"** (.218) 5,56 mm |
| **QCHS 250-10** | **1/4"** (.250) 6,35 mm |
| **QCHS 281-10** | **9/32"** (.281) 7,14 mm |
| **QCHS 312-10** | **5/16"** (.312) 7,94 mm |
| **QCHS 343-10** | **11/32"** (.343) 8,73 mm |
| **QCHS 375-10** | **3/8"** (.375) 9,53 mm |
| **QCHS 437-10** | **7/16"** (.437) 11,11 mm |

| **Stiftschlüssel** / HEX KEY | **Größe** / HEX SIZE |
|---|---|
| **QRK-5** | 1/16" |
| **QRK-6** | 5/64" |
| **QRK-8** | 3/32" |
| **QRK-10** | 1/8" |

| **QCRSS 23-43** **bestehend aus**/EXIST OF: **Ausbau-Steckschlüssel** REMOVAL SOCKET | **Klemmbereich des Steckschlüssel** GRIP RANGE OF SOCKET **Inch** | **mm** |
|---|---|---|
| **QCHR 235-10** | 0.235-0.255 | 5,97-6,48 |
| **QCHR 245-10** | 0.245-0.265 | 6,22-6,73 |
| **QCHR 255-10** | 0.255-0.275 | 6,48-6,99 |
| **QCHR 265-10** | 0.265-0.285 | 6,73-7,24 |
| **QCHR 275-10** | 0.275-0.295 | 6,99-7,49 |
| **QCHR 285-10** | 0.285-0.305 | 7,24-7,75 |
| **QCHR 295-10** | 0.295-0.315 | 7,49-8,00 |
| **QCHR 305-10** | 0.305-0.325 | 7,75-8,26 |
| **QCHR 315-10** | 0.315-0.335 | 8,00-8,51 |
| **QCHR 325-10** | 0.325-0.345 | 8,26-8,76 |
| **QCHR 335-10** | 0.335-0.355 | 8,51-9,02 |
| **QCHR 355-10** | 0.355-0.375 | 9,02-9,53 |
| **QCHR 375-10** | 0.375-0.395 | 9,53-10,03 |
| **QCHR 395-10** | 0.395-0.415 | 10,03-10,54 |

**Standard Steckschlüssellänge ist 25,4 mm** - STANDARD SOCKET LENGTH IS 1"

# Hi-Lok Ein- und Ausbau-Werkzeugsatz
## HI-LOK INSTALLATION & REMOVAL TOOL KIT

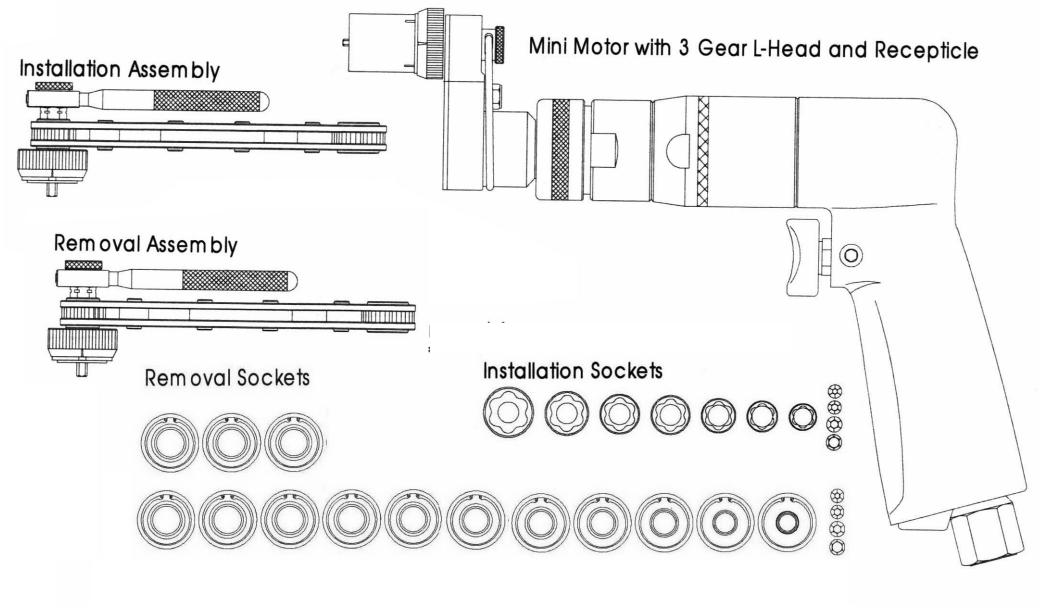


# QCK-4000

| **Inhalt /** CONTENTS: | **Artikel-Nr.** PART NO. |
|---|---|
| **Aufbewahrungskasten** / CASE | --- |
| **Pneum. Mini Schrauber mit kleinem Winkelkopf und Adapter für Steckschlüssel** PNEUM. MINI MOTOR WITH 3 GEAR L-HEAD AND RECEPTICLE FOR SOCKETS | **MQCLA43S-10** |
| **Hand-Einbauwerkzeug mit Adapter für Steckschlüssel** HAND-INSTALLATION TOOL WITH RECEPTICLE FOR SOCKETS | **QCHA932** |
| **Hand-Ausbauwerkzeug mit Adapter für Steckschlüssel** HAND-REMOVAL TOOL WITH RECEPTICLE FOR SOCKETS | **QCHRA932** |
| **Einbau-Steckschlüsselsatz (7 tlg.) inkl. 4 QRK-Stiftschlüssel** Installation Socket Set (7 pcs.) incl. 4 QRK Hex-Keys | **QCSS22-43-10** |
| **Ausbau-Steckschlüsselsatz (14 tlg.) inkl. 4 QRK-Stiftschlüssel** Removal Socket Set (14 pcs.) incl. 4 QRK Hex-Keys | **QCRSS23-43** |

| **QCSS 22-43-10** **bestehend aus/**EXIST OF: **Einbau-Steckschlüssel** INSTALLATION SOCKET | **Größe** HEX SIZE |
|---|---|
| **QCHS 218-10** | **7/32"** (.218) 5,56 mm |
| **QCHS 250-10** | **1/4"** (.250) 6,35 mm |
| **QCHS 281-10** | **9/32"** (.281) 7,14 mm |
| **QCHS 312-10** | **5/16"** (.312) 7,94 mm |
| **QCHS 343-10** | **11/32"** (.343) 8,73 mm |
| **QCHS 375-10** | **3/8"** (.375) 9,53 mm |
| **QCHS 437-10** | **7/16"** (.437) 11,11 mm |

| **Stiftschlüssel** / HEX KEY | **Größe** / HEX SIZE |
|---|---|
| **QRK-5** | 1/16" |
| **QRK-6** | 5/64" |
| **QRK-8** | 3/32" |
| **QRK-10** | 1/8" |

| **QCRSS 23-43** **bestehend aus/**EXIST OF: **Ausbau-Steckschlüssel** REMOVAL SOCKET | **Klemmbereich des Steckschlüssel** GRIP RANGE OF SOCKET **Inch** | **mm** |
|---|---|---|
| **QCHR 235-10** | 0.235-0.255 | 5,97-6,48 |
| **QCHR 245-10** | 0.245-0.265 | 6,22-6,73 |
| **QCHR 255-10** | 0.255-0.275 | 6,48-6,99 |
| **QCHR 265-10** | 0.265-0.285 | 6,73-7,24 |
| **QCHR 275-10** | 0.275-0.295 | 6,99-7,49 |
| **QCHR 285-10** | 0.285-0.305 | 7,24-7,75 |
| **QCHR 295-10** | 0.295-0.315 | 7,49-8,00 |
| **QCHR 305-10** | 0.305-0.325 | 7,75-8,26 |
| **QCHR 315-10** | 0.315-0.335 | 8,00-8,51 |
| **QCHR 325-10** | 0.325-0.345 | 8,26-8,76 |
| **QCHR 335-10** | 0.335-0.355 | 8,51-9,02 |
| **QCHR 355-10** | 0.355-0.375 | 9,02-9,53 |
| **QCHR 375-10** | 0.375-0.395 | 9,53-10,03 |
| **QCHR 395-10** | 0.395-0.415 | 10,03-10,54 |

**Standard Steckschlüssellänge ist 25,4 mm -** STANDARD SOCKET LENGTH IS 1"

# Hi-Lok Montagewerkzeuge
# HI-LOK INSTALLATION TOOLS

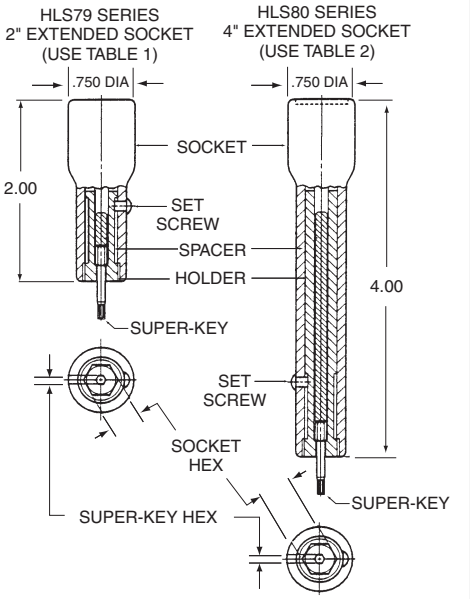


## INSTALLATION TOOLING

# SUPER HLA1051

**Straight Driver Assembly with Extended Socket and Super-Key™ (T-Series)**

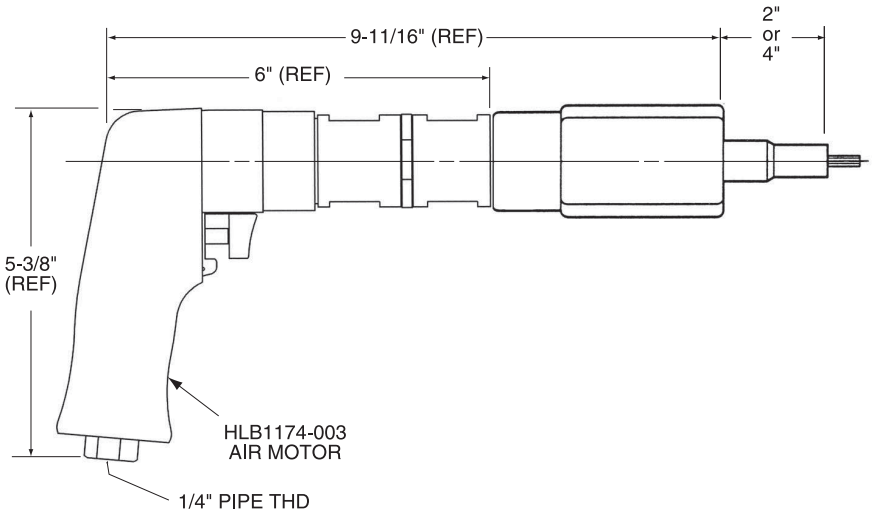


DRIVER BASIC PART NO. — SOCKET HEX REF. TABLE 1 OR 2 — SOCKET LENGTH: X = 4.0", NO LETTER = 2.0" — SUPER-KEY HEX REF. TABLE 1 OR 2. — SUPER-KEY (T-SERIES)

**HLA1051 - 312 (X) - 078 -T**

Example: complete driver assy. part no.

### ORDERING INFORMATION

1. Match pin and collar hexes with Super-Key Hex and Socket Hex.
2. See tables 1 & 2 for corresponding complete driver assy part no.

**TECHNICAL DATA**

| | |
|---|---|
| Operating Pressure ..... 90 PSIA | Horsepower Rating ..... 0.70 |
| **MAX. TORQUE RATING** ..... 300 in. lb (Motor) @90 PSIA | Air Consumption ..... 22 SCFM |
| Socket Speed ..... 250 RPM | Weight ..... 3.8 lb |

**TABLE 1**

| COLLAR DRIVING HEX (Matches Socket Hex) | PIN RECESS HEX (Matches Super-Key Hex) | COMPLETE DRIVER ASSY. PART NO. w/ HLS79 Series 2" Extended Socket |
|---|---|---|
| 3/16 | 1/16 | HLA1051-187-062T |
| 7/32 | | HLA1051-218-062T |
| 1/4 | | HLA1051-250-062T |
| 9/32 | | HLA1051-281-062T |
| 5/16 | | HLA1051-312-062T |
| 11/32 | | HLA1051-343-062T |
| 7/32 | | HLA1051-218-078T |
| 1/4 | 5/64 | HLA1051-250-078T |
| 9/32 | | HLA1051-281-078T |
| 5/16 | | HLA1051-312-078T |
| 11/32 | | HLA1051-343-078T |
| 3/8 | | HLA1051-375-078T |
| 5/16 | 3/32 | HLA1051-312-094T |
| 11/32 | | HLA1051-343-094T |
| 3/8 | | HLA1051-375-094T |
| 7/16 | | HLA1051-437-094T |

**TABLE 2**

| COLLAR DRIVING HEX (Matches Socket Hex) | PIN RECESS HEX (Matches Super-Key Hex) | COMPLETE DRIVER ASSY. PART NO. w/ HLS80 Series 4" Extended Socket |
|---|---|---|
| 3/16 | 1/16 | HLA1051-187X-062T |
| 7/32 | | HLA1051-218X-062T |
| 1/4 | | HLA1051-250X-062T |
| 9/32 | | HLA1051-281X-062T |
| 5/16 | | HLA1051-312X-062T |
| 11/32 | | HLA1051-343X-062T |
| 7/32 | | HLA1051-218X-078T |
| 1/4 | 5/64 | HLA1051-250X-078T |
| 9/32 | | HLA1051-281X-078T |
| 5/16 | | HLA1051-312X-078T |
| 11/32 | | HLA1051-343X-078T |
| 3/8 | | HLA1051-375X-078T |
| 5/16 | 3/32 | HLA1051-312X-094T |
| 11/32 | | HLA1051-343X-094T |
| 3/8 | | HLA1051-375X-094T |
| 7/16 | | HLA1051-437X-094T |

# Hi-Lok Montagewerkzeuge
# HI-LOK INSTALLATION TOOLS

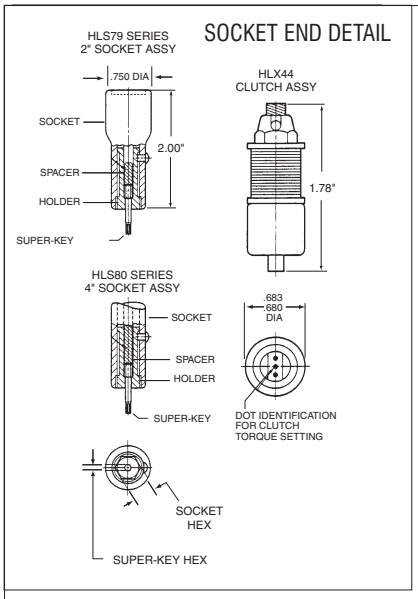


INSTALLATION TOOLING

# SUPER HLA1066

**Offset Driver Assembly with Clutch, Extended Socket and Super-Key™ (T-Series)**

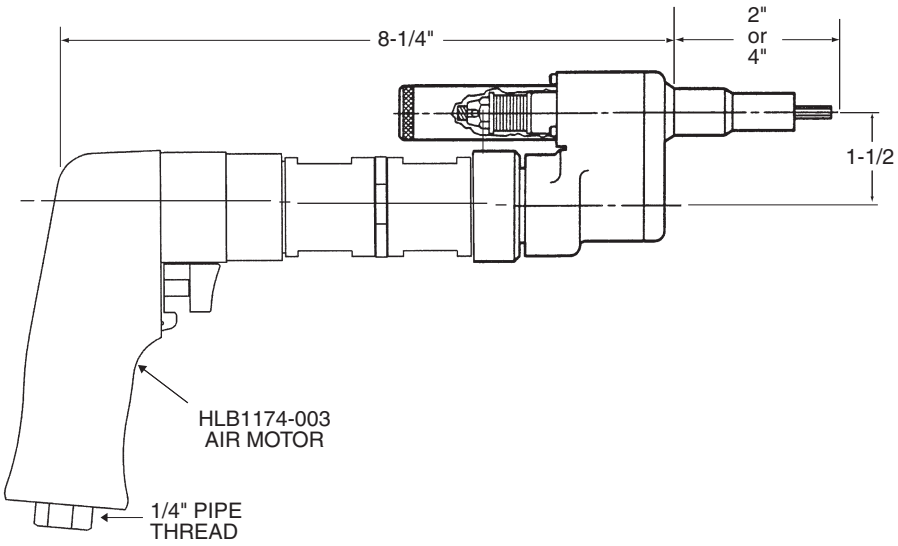


DRIVER BASIC PART NO. — SOCKET HEX REF. TABLE 1 — SOCKET LENGTH: X = 4.0", NO LETTER = 2.0" — SUPER-KEY HEX REF. TABLE 1. — SUPER-KEY (T-SERIES)

**HLA1066-312(X)-078T**

Example: complete driver assy. part no.

### ORDERING INFORMATION

1. Match pin and collar hexes with Super-Key Hex and Socket Hex.
2. See table 1 for corresponding complete driver assy part no.

### TECHNICAL DATA

| | |
|---|---|
| Operating Pressure ..... 90 PSIA | Horsepower Rating ..... 0.70 |
| **MAX. TORQUE RATING** ..... 300 in. lb (Motor) @90 PSIA | Air Consumption ..... 22 SCFM |
| Socket Speed ..... 250 RPM | Weight ..... 3.8 lb |

### TABLE 1

| COLLAR DRIVING HEX (Matches Socket Hex) | PIN RECESS HEX (Matches Super-Key Hex) | COMPLETE DRIVER ASSY. PART NO. WITH HLS79 SERIES 2" EXTENDED SOCKET | COMPLETE DRIVER ASSY. PART NO. WITH HLS80 SERIES 4" EXTENDED SOCKET | B DIA. | HLAX4 CLUTCH ASSEMBLIES PART NO. | HLAX4 CLUTCH ASSEMBLIES DOT IDENTIFICATION | HLAX4 CLUTCH ASSEMBLIES TORQUE SETTING |
|---|---|---|---|---|---|---|---|
| 1/4 | 1/16 | HLA1066-250-062T | HLA1066-250X-062T | 0.468 | HLXA4-5 | • | 8-10 IN. LB |
| 9/32 | | HLA1066-281-062T | HLA1066-281X-062T | 0.468 | | | |
| 5/16 | | HLA1066-312-062T | HLA1066-312X-062T | 0.500 | | | |
| 11/32 | | HLA1066-343-062T | HLA1066-343X-062T | 0.500 | | | |
| 1/4 | 5/64 | HLA1066-250-078T | HLA1066-250X-078T | 0.468 | HLXA4-6 | • • | 18-20 IN. LB |
| 9/32 | | HLA1066-281-078T | HLA1066-281X-078T | 0.468 | | | |
| 5/16 | | HLA1066-312-078T | HLA1066-312X-078T | 0.500 | | | |
| 11/32 | | HLA1066-343-078T | HLA1066-343X-078T | 0.500 | | | |
| 3/8 | | HLA1066-375-078T | HLA1066-375X-078T | 0.550 | | | |
| 5/16 | 3/32 | HLA1066-312-094T | HLA1066-312X-094T | 0.500 | HLXA4-8 | • • • | 30-32 IN. LB |
| 11/32 | | HLA1066-343-094T | HLA1066-343X-094T | 0.500 | | | |
| 3/8 | | HLA1066-375-094T | HLA1066-375X-094T | 0.550 | | | |
| 7/16 | | HLA1066-437-094T | HLA1066-437X-094T | 0.625 | | | |

# Hi-Lok Montagewerkzeuge
# HI-LOK INSTALLATION TOOLS

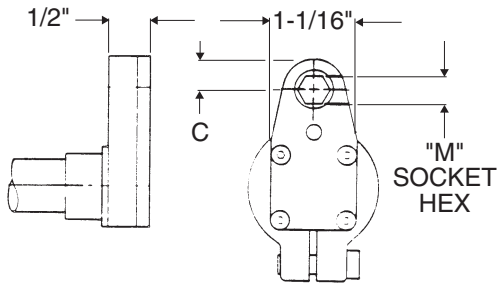


HLG115H OFFSET ADAPTOR ASSY W/THRU-HEX SOCKET
(Finder pin & leaf spring not included)

INSTALLATION TOOLING

## SUPER HLA1071

**Offset Driver Assembly**
**with Interference Fit Flush Socket**

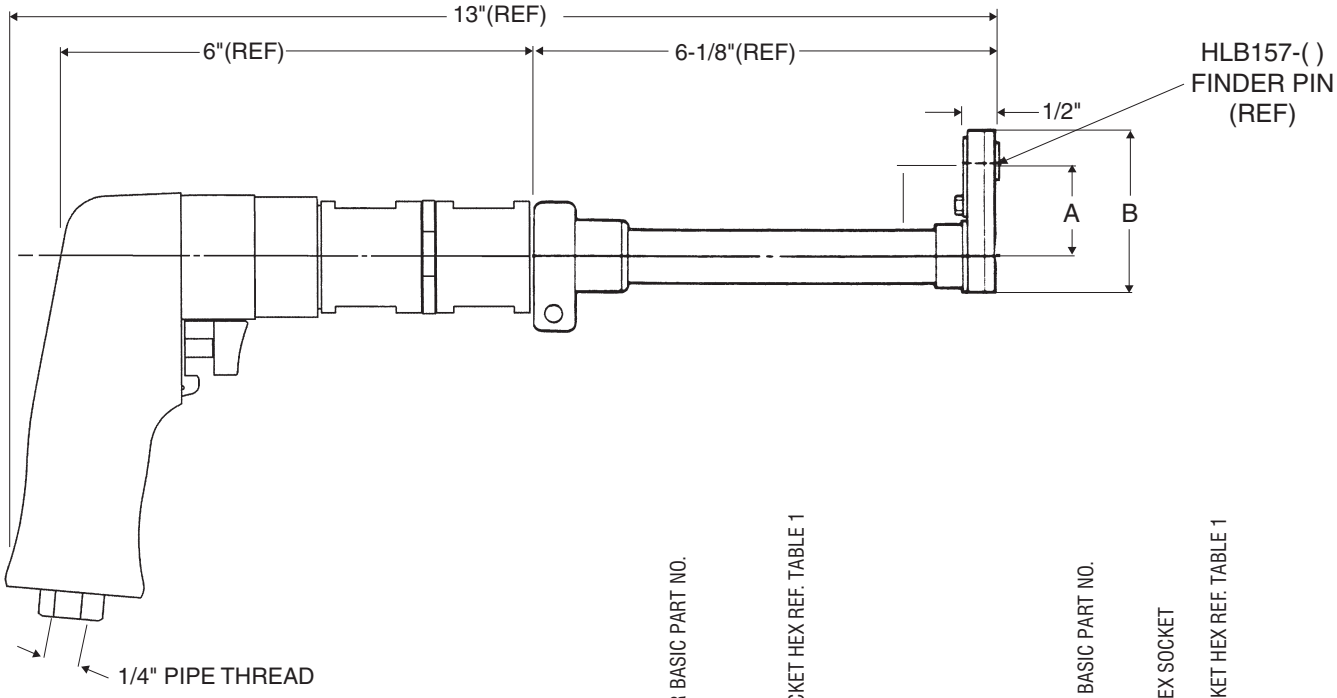


### ORDERING INFORMATION

1. Determine collar driving hex dimensions of the fasteners to be installed.
2. See table 1 for 'M'socket hex to match collar driving hex dimensions. Determine complete tool assembly part no. (Example 1).
3. See table 2 for complete tool assembly part nos. to obtain an Offset Adaptor Assembly featuring a thru-hex socket, less finder pin and leaf spring.
4. See example 2.




Example 1: complete driver assy.




Example 2: complete driver assy. part no. w/ thru-hex socket

**TECHNICAL DATA**

| | | | |
|---|---|---|---|
| Operating Pressure | 90 PSIA | Horsepower Rating | 0.70 |
| **MAX. TORQUE RATING** (Motor) | 300 in. lb @90 PSIA | Air Consumption | 22 SCFM |
| Socket Speed | 250 RPM | Weight | 3.8 lb |

| | | | | TABLE 1 | | | | TABLE 2 | | |
|---|---|---|---|---|---|---|---|---|---|---|
| COLLAR Hex Size | A C to C | B OVERALL | C EDGE DISTANCE | "M" SOCKET HEX (Matches Collar Driving Hex) | COMPLETE TOOL ASSY. PART NO. | OFFSET ADAPTOR ASSY. PART NO. (REF.) | OFFSET ADAPTOR ASSY. PART NO. (REF.) | "M" SOCKET HEX (Matches Collar Driving Hex) | COMPLETE TOOL ASSY. PART NO. | OFFSET ADAPTOR ASSY. PART NO. (REF.) |
| up to 3/8 | 1.375 | 2.330 | 0.431 | 5/16 | HLA1071-312 | HLG115-312 | HLB157-312 | 5/16 | HLA1071H-312 | HLG115H-312 |
| 7/16 and up | 1.420 | 2.450 | 0.500 | 11/32 | HLA1071-343 | HLG115-343 | HLB157-343 | 11/32 | HLA1071H-343 | HLG115H-343 |
| | | | | 3/8 | HLA1071-375 | HLG115-375 | HLB157-375 | 3/8 | HLA1071H-375 | HLG115H-375 |
| | | | | 7/16 | HLA1071-437 | HLG115-437 | HLB157-437 | 7/16 | HLA1071H-437 | HLG115H-437 |

# Hi-Lok Montagewerkzeuge
# HI-LOK INSTALLATION TOOLS

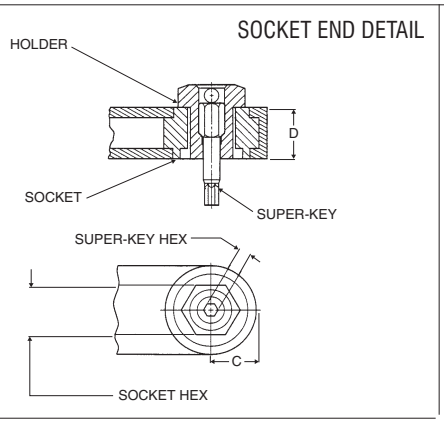


INSTALLATION TOOLING

## SUPER HLA1072

**Offset Driver Assembly with Thin Flush Socket and Super-Key™ (T-Series)**

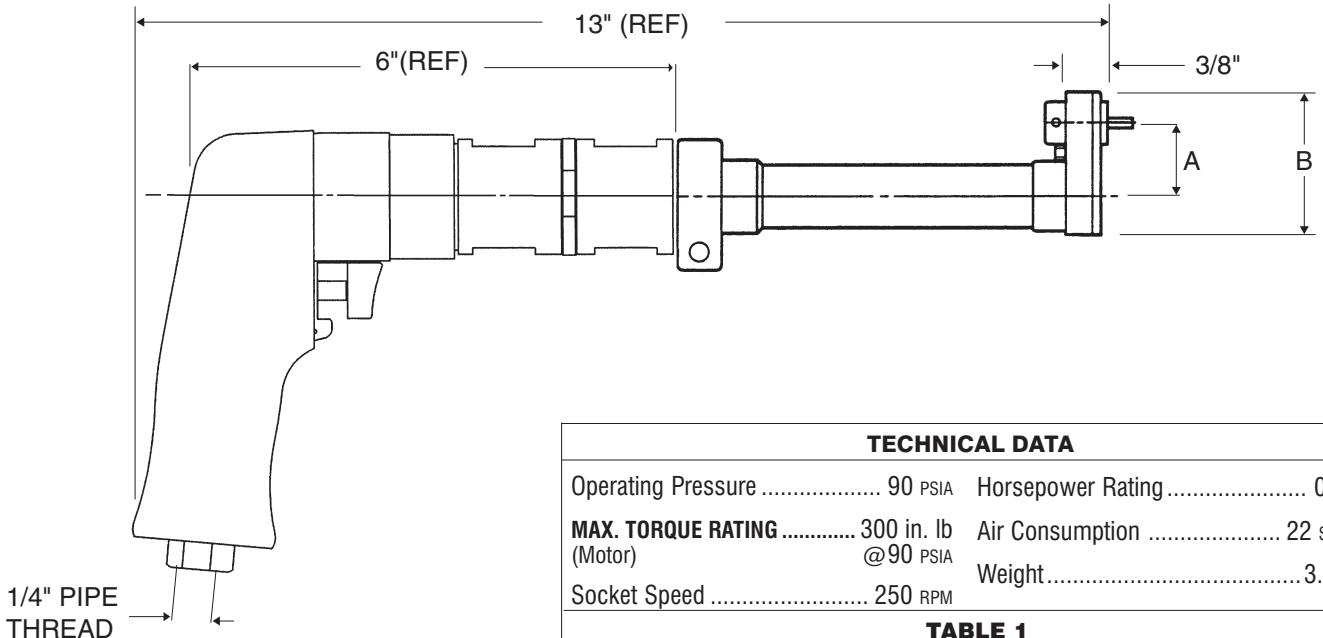


**TECHNICAL DATA**

| | |
|---|---|
| Operating Pressure ..... 90 PSIA | Horsepower Rating ..... 0.70 |
| **MAX. TORQUE RATING** ..... 300 in. lb (Motor) @90 PSIA | Air Consumption ..... 22 SCFM |
| Socket Speed ..... 250 RPM | Weight ..... 3.8 lb |

DRIVER BASIC PART NO. — SOCKET HEX (REF TABLE) — SUPER-KEY HEX (REF TABLE) — SUPER-KEY (T-SERIES)

**HLA1072 - 312 - 078 -T**

Example: complete driver assy. part no.

**ORDERING INFORMATION**

1. Match pin and collar hexes with Super-Key Hex and Socket Hex.
2. See table for corresponding complete driver assy part no.

| COLLAR Hex Size | A C to C | B OVERALL | C EDGE DISTANCE | D WIDTH |
|---|---|---|---|---|
| up to 3/8 | 1.375 | 2.338 | 0.437 | 0.375 |
| 7/16 and up | 1.420 | 2.418 | 0.470 | 0.375 |

**TABLE 1**

| COLLAR DRIVING HEX (Matches Socket Hex) | PIN RECESS HEX (Matches Super-Key Hex) | COMPLETE DRIVER ASSY | OFFSET ADAPTOR & SOCKET ASSY |
|---|---|---|---|
| 3/16 | 1/16 | HLA1072-187-062T | HLG137-187-062T |
| 7/32 | | HLA1072-218-062T | HLG137-218-062T |
| 1/4 | | HLA1072-250-062T | HLG137-250-062T |
| 9/32 | | HLA1072-281-062T | HLG137-281-062T |
| 5/16 | | HLA1072-312-062T | HLG137-312-062T |
| 11/32 | | HLA1072-343-062T | HLG137-343-062T |
| 7/32 | 5/64 | HLA1072-218-078T | HLG137-218-078T |
| 1/4 | | HLA1072-250-078T | HLG137-250-078T |
| 9/32 | | HLA1072-281-078T | HLG137-281-078T |
| 5/16 | | HLA1072-312-078T | HLG137-312-078T |
| 11/32 | | HLA1072-343-078T | HLG137-343-078T |
| 3/8 | | HLA1072-375-078T | HLG137-375-078T |
| 6/16 | 3/32 | HLA1072-312-094T | HLG137-312-094T |
| 11/32 | | HLA1072-343-094T | HLG137-343-094T |
| 3/8 | | HLA1072-375-094T | HLG137-375-094T |
| 7/16 | | HLA1072-437-094T | HLG137-437-094T |
| 3/8 | 1/8 | HLA1072-375-125T | HLG137-375-125T |
| 7/16 | | HLA1072-437-125T | HLG137-437-125T |

# Hi-Lok Montagewerkzeuge
# HI-LOK INSTALLATION TOOLS

## INSTALLATION TOOLING
# SUPER HLA1076

**2 Inch Offset Driver Assembly with Multi-Length Socket and Super-Key™ (T-Series)**

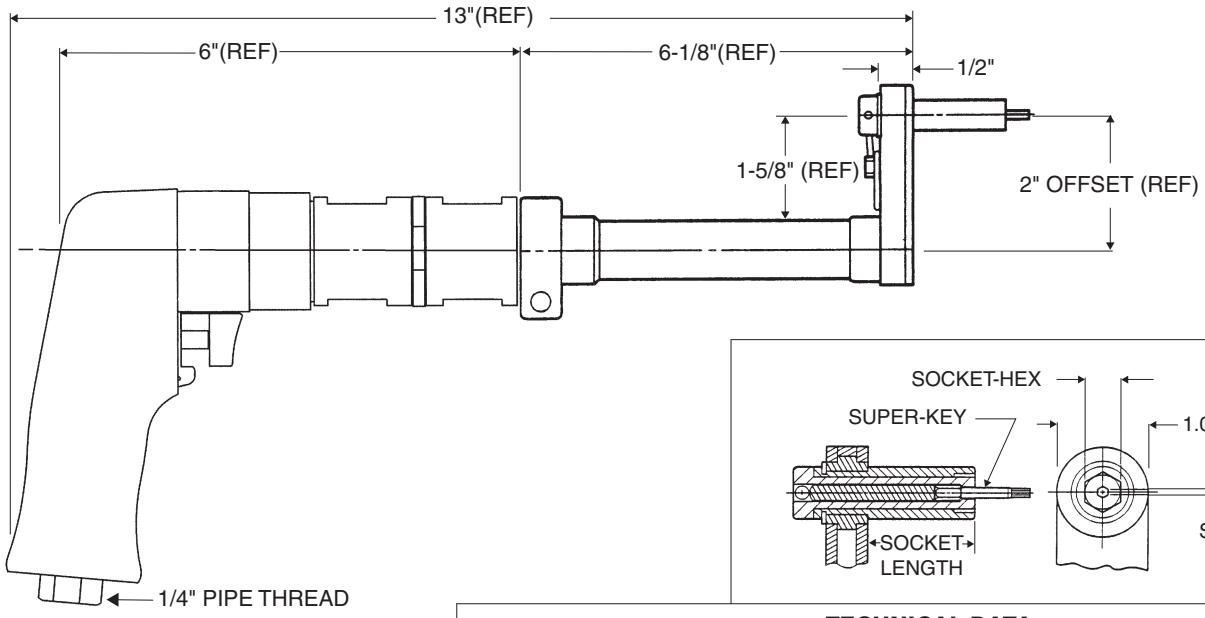





**TECHNICAL DATA**

| | | | |
|---|---|---|---|
| Operating Pressure | 90 PSIA | Horsepower Rating | 0.70 |
| **MAX. TORQUE RATING** (Motor) | 300 in. lb @90 PSIA | Air Consumption | 22 SCFM |
| Socket Speed | 250 RPM | Weight | 3.8 lb |

HLA1076-312(E)-078T

- HLA1076 — DRIVER BASIC PART NO.
- 312 — SOCKET HEX REF. TABLE 1
- (E) — SOCKET LENGTH CODE (REF TABLE 2)
- 078 — SUPER-KEY HEX REF. TABLE 1.
- T — SUPER-KEY (T-SERIES)

Example: complete driver assy. part no.

### ORDERING INFORMATION

1. Match pin and collar hexes with Super-Key Hex and Socket Hex.
2. See table 1 for corresponding complete driver assy part no.
2. See table 2 for SOCKET LENGTH CODES

**TABLE 2**

| | |
|---|---|
| A = 0.50 | E = 0.75 |
| B = 1.00 | F = 1.75 |
| C = 1.50 | X = 4.00 |
| D = 2.00 | |

**TABLE 1**

| COLLAR DRIVING HEX (Matches Socket Hex) | PIN RECESS HEX (Matches Super-Key Hex) | COMPLETE DRIVER ASSY. PART NO. | OFFSET ADAPTOR & SOCKET ASSY. PART NO. | EXTENDED SOCKET ASSY. PART NO. |
|---|---|---|---|---|
| 3/16 | 1/16 | HLA1076-187( )-062T | HLG321-187( )-062T | HLS76-187( )-062T |
| 7/32 | | HLA1076-218( )-062T | HLG321-218( )-062T | HLS76-218( )-062T |
| 1/4 | | HLA1076-250( )-062T | HLG321-250( )-062T | HLS76-250( )-062T |
| 9/32 | | HLA1076-281( )-062T | HLG321-281( )-062T | HLS76-281( )-062T |
| 5/16 | | HLA1076-312( )-062T | HLG321-312( )-062T | HLS76-312( )-062T |
| 11/32 | | HLA1076-343( )-062T | HLG321-343( )-062T | HLS76-343( )-062T |
| 7/32 | 5/64 | HLA1076-218( )-078T | HLG321-218( )-078T | HLS76-218( )-078T |
| 1/4 | | HLA1076-250( )-078T | HLG321-250( )-078T | HLS76-250( )-078T |
| 9/32 | | HLA1076-281( )-078T | HLG321-281( )-078T | HLS76-281( )-078T |
| 5/16 | | HLA1076-312( )-078T | HLG321-312( )-078T | HLS76-312( )-078T |
| 11/32 | | HLA1076-343( )-078T | HLG321-343( )-078T | HLS76-343( )-078T |
| 3/8 | | HLA1076-375( )-078T | HLG321-375( )-078T | HLS76-375( )-078T |
| 5/16 | 3/32 | HLA1076-312( )-094T | HLG321-312( )-094T | HLS76-312( )-094T |
| 11/32 | | HLA1076-343( )-094T | HLG321-343( )-094T | HLS76-343( )-094T |
| 3/8 | | HLA1076-375( )-094T | HLG321-375( )-094T | HLS76-375( )-094T |
| 7/16 | | HLA1076-437( )-094T | HLG321-437( )-094T | HLS76-437( )-094T |
| 3/8 | 1/8 | HLA1076-375( )-125T | HLG321-375( )-125T | HLS76-375( )-125T |
| 7/16 | | HLA1076-437( )-125T | HLG321-437( )-125T | HLS76-437( )-125T |

# Hi-Lok Montagewerkzeuge
# HI-LOK INSTALLATION TOOLS

## INSTALLATION TOOLING
## SUPER HLA1079

**2 Inch Offset Driver Assembly with Thin Flush Socket and Super-Key™ (T-Series)**

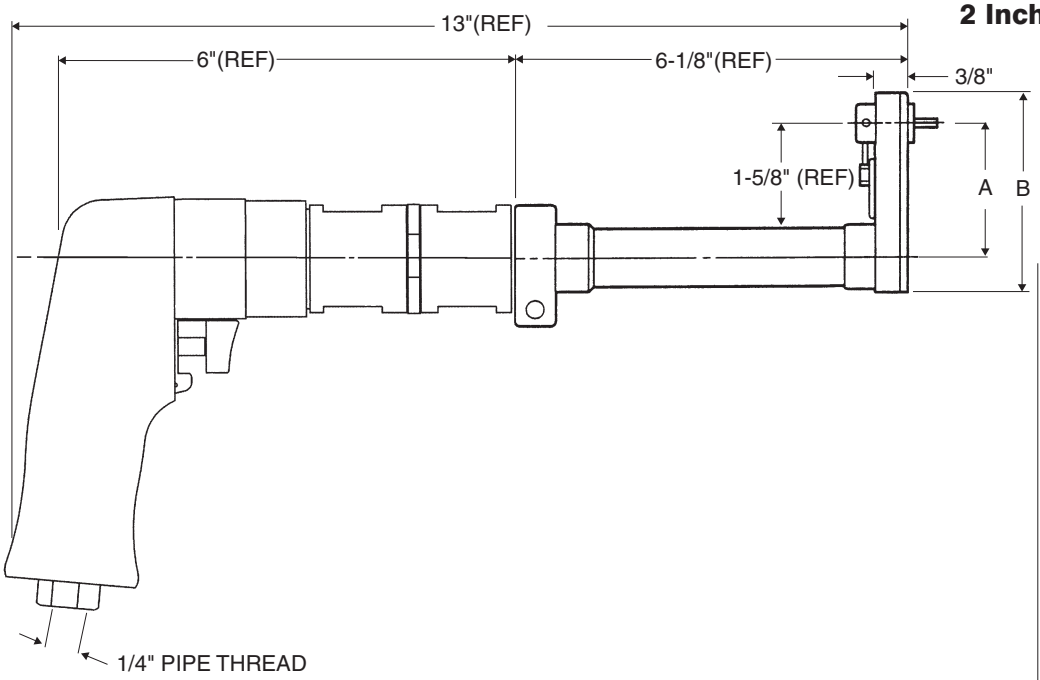


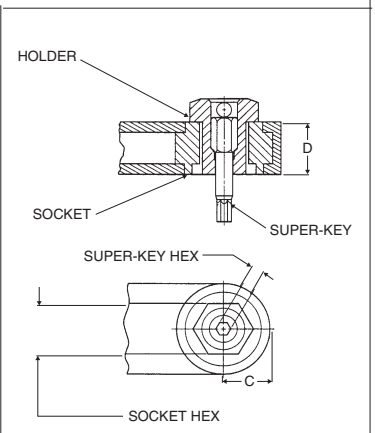


### TECHNICAL DATA

Operating Pressure ..... 90 PSIA
**MAX. TORQUE RATING** ..... 300 in. lb
(Motor) @90 PSIA
Socket Speed ..... 250 RPM
Horsepower Rating ..... 0.70
Air Consumption ..... 22 SCFM
Weight ..... 3.8 lb

DRIVER BASIC PART NO. — SOCKET HEX REF. TABLE 1 — SUPER-KEY HEX REF. TABLE 1 — SUPER-KEY (T-SERIES)

**HLA1079-312-078-T**

Example: complete driver assy. part no.

### ORDERING INFORMATION

1. Match pin and collar hexes with Super-Key Hex and Socket Hex.
2. See table 1 for corresponding complete driver assy part no.

| COLLAR Hex Size | A C to C | B OVERALL | C EDGE DISTANCE | D WIDTH |
|---|---|---|---|---|
| up to 3/8 | 2.210 | 3.175 | 0.431 | 0.375 |
| 7/16 and up | 2.250 | 3.254 | 0.470 | 0.375 |

### TABLE 1

| COLLAR DRIVING HEX (Matches Socket Hex) | PIN RECESS HEX (Matches Super-Key Hex) | COMPLETE DRIVER ASSY. | OFFSET ADAPTOR & SOCKET ASSY. |
|---|---|---|---|
| 3/16 | 1/16 | HLA1079-187-062T | HLG148-187-062T |
| 7/32 | | HLA1079-218-062T | HLG148-218-062T |
| 1/4 | | HLA1079-250-062T | HLG148-250-062T |
| 9/32 | | HLA1079-281-062T | HLG148-281-062T |
| 5/16 | | HLA1079-312-062T | HLG148-312-062T |
| 11/32 | | HLA1079-343-062T | HLG148-343-062T |
| 7/32 | 5/64 | HLA1079-218-078T | HLG148-218-078T |
| 1/4 | | HLA1079-250-078T | HLG148-250-078T |
| 9/32 | | HLA1079-281-078T | HLG148-281-078T |
| 5/16 | | HLA1079-312-078T | HLG148-312-078T |
| 11/32 | | HLA1079-343-078T | HLG148-343-078T |
| 3/8 | | HLA1079-375-078T | HLG148-375-078T |
| 5/16 | 3/32 | HLA1079-312-094T | HLG148-312-094T |
| 11/32 | | HLA1079-343-094T | HLG148-343-094T |
| 3/8 | | HLA1079-375-094T | HLG148-375-094T |
| 7/16 | | HLA1079-437-094T | HLG148-437-094T |
| 3/8 | 1/8 | HLA1079-375-125T | HLG148-375-125T |
| 7/16 | | HLA1079-437-125T | HLG148-437-125T |

# Hi-Lok Montagewerkzeuge
# HI-LOK INSTALLATION TOOLS

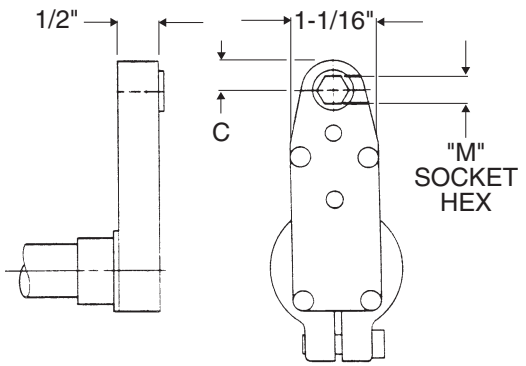


HLG125H OFFSET ADAPTER ASSY WITH
THRU-HEX SOCKET, LESS FINDER PIN AND LEAF SPRING

**INSTALLATION TOOLING**

## SUPER HLA1084

**2 Inch Offset Driver Assembly**
**with Interference Fit Flush Socket**

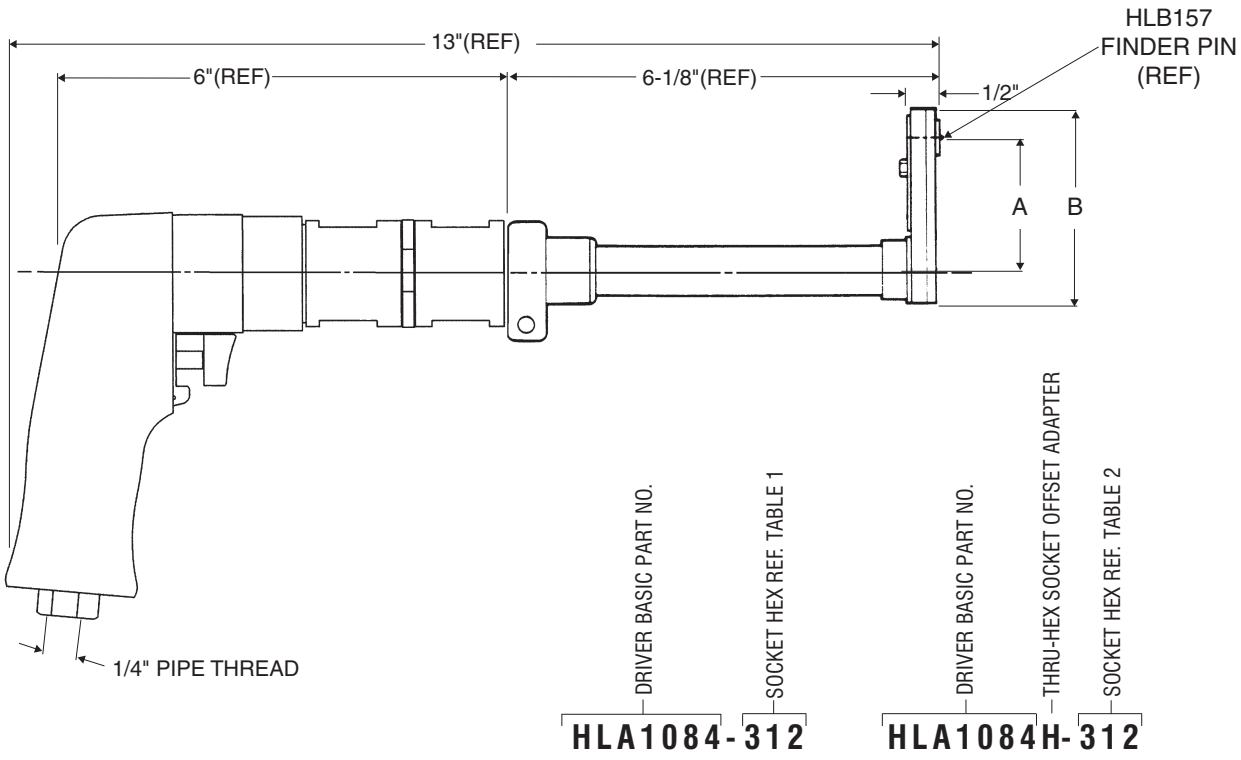


### ORDERING INFORMATION

1. Match pin and collar hexes with Super-Key Hex and Socket Hex.
2. See tables 1 & 2 for corresponding complete driver assy part no.

### TECHNICAL DATA

Operating Pressure ..... 90 PSIA
**MAX. TORQUE RATING** ..... 300 in. lb (Motor) @90 PSIA
Socket Speed ..... 250 RPM
Horsepower Rating ..... 0.70
Air Consumption ..... 22 SCFM
Weight ..... 3.8 lb

| | | | | | TABLE 1 | | | | TABLE 2 | | |
|---|---|---|---|---|---|---|---|---|---|---|---|
| SOCKET SIZE | A C to C | B OVERALL | C EDGE DISTANCE | D WIDTH | "M" SOCKET HEX (Matches Collar Driving Hex) | COMPLETE TOOL ASSY. PART NO. | OFFSET ADAPTOR ASSY. PART NO. (REF) | FINDER PIN PART NO. | "M" SOCKET HEX (Matches Collar Driving Hex) | COMPLETE TOOL ASSY. PART NO. | OFFSET ADAPTOR ASSY. PART NO. (REF) |
| up to 3/8 | 2.210 | 3.182 | 0.431 | 0.500 | 1/4 | HLA1084-250 | HLG125-250 | HLB157-250 | 1/4 | HLA1084H-250 | HLG125H-250 |
| 7/16 and up | 2.250 | 3.283 | 0.500 | 0.500 | 5/16 | HLA1084-312 | HLG125-312 | HLB157-312 | 5/16 | HLA1084H-312 | HLG125H-312 |
| | | | | | 11/32 | HLA1084-343 | HLG125-343 | HLB157-343 | 11/32 | HLA1084H-343 | HLG125H-343 |
| | | | | | 7/16 | HLA1084-437 | HLG125-437 | HLB157-437 | 7/16 | HLA1084H-437 | HLG125H-437 |

# Hi-Lok Montagewerkzeuge
# HI-LOK INSTALLATION TOOLS

INSTALLATION TOOLING

## SUPER HLA1086

**2 Inch Offset Back Drive Driver Assembly with Extended Socket and Super-Key™ (T-Series)**

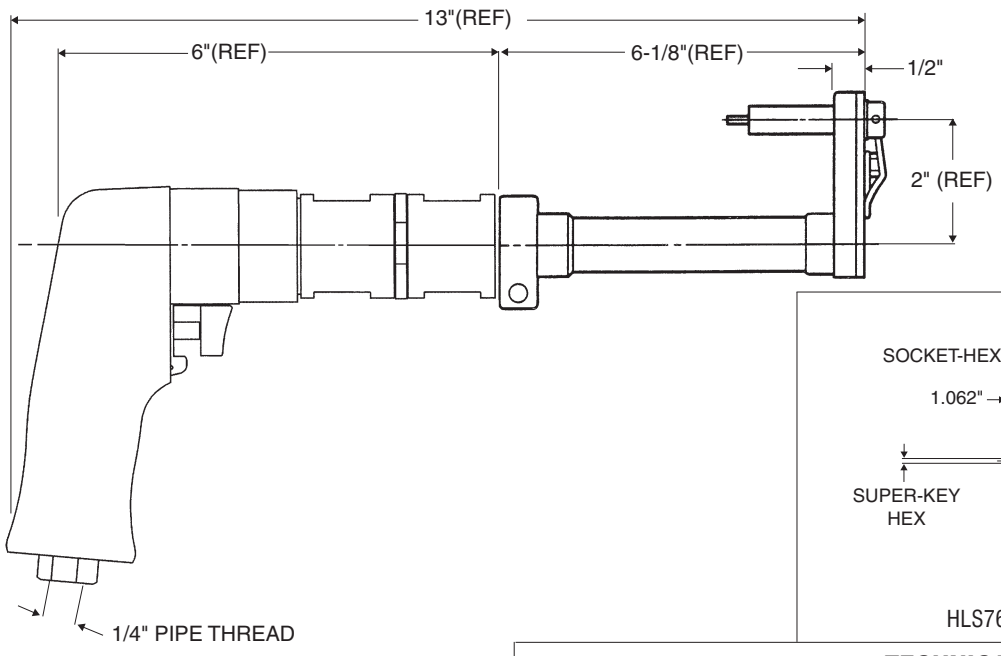


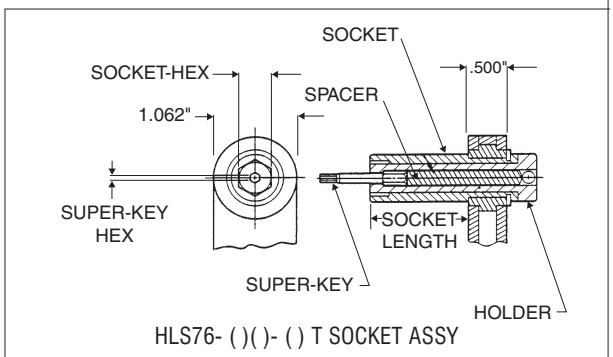


HLS76- ( )( )- ( ) T SOCKET ASSY

### TECHNICAL DATA

| | | | |
|---|---|---|---|
| Operating Pressure | 90 PSIA | Horsepower Rating | 0.70 |
| **MAX. TORQUE RATING** (Motor) | 300 in. lb @90 PSIA | Air Consumption | 22 SCFM |
| Socket Speed | 250 RPM | Weight | 3.8 lb |

DRIVER BASIC PART NO. — SOCKET HEX REF. TABLE 1 — SOCKET LENGTH (REF TABLE 2) — SUPER-KEY HEX (REF TABLE 1) — SUPER-KEY (T-SERIES)

**HLA1086-312(A)-078-T**

Example: complete driver assy. part no.

**ORDERING INFORMATION**

1. Match pin and collar hexes with Super-Key Hex and Socket Hex.
2. See table 1 for corresponding complete driver assy part no.

**TABLE 2**

| | |
|---|---|
| A = 0.50 | E = 0.75 |
| B = 1.00 | F = 1.75 |
| C = 1.50 | X = 4.00 |
| D = 2.00 | |

**TABLE 1**

| COLLAR DRIVING HEX (Matches Socket Hex) | PIN RECESS HEX (Matches Super-Key Hex) | COMPLETE DRIVER ASSY. PART NO. | OFFSET ADAPTOR & SOCKET ASSY. PART NO. | EXTENDED SOCKET ASSY. PART NO. |
|---|---|---|---|---|
| 3/16 | 1/16 | HLA1086-187( )-062T | HLG222-187( )-062T | HLS76-187( )-062T |
| 7/32 | | HLA1086-218( )-062T | HLG222-218( )-062T | HLS76-218( )-062T |
| 1/4 | | HLA1086-250( )-062T | HLG222-250( )-062T | HLS76-250( )-062T |
| 9/32 | | HLA1086-281( )-062T | HLG222-281( )-062T | HLS76-281( )-062T |
| 5/16 | | HLA1086-312( )-062T | HLG222-312( )-062T | HLS76-312( )-062T |
| 11/32 | | HLA1086-343( )-062T | HLG222-343( )-062T | HLS76-343( )-062T |
| 7/32 | 5/64 | HLA1086-218( )-078T | HLG222-218( )-078T | HLS76-218( )-078T |
| 1/4 | | HLA1086-250( )-078T | HLG222-250( )-078T | HLS76-250( )-078T |
| 9/32 | | HLA1086-281( )-078T | HLG222-281( )-078T | HLS76-281( )-078T |
| 5/16 | | HLA1086-312( )-078T | HLG222-312( )-078T | HLS76-312( )-078T |
| 11/32 | | HLA1086-343( )-078T | HLG222-343( )-078T | HLS76-343( )-078T |
| 3/8 | | HLA1086-375( )-078T | HLG222-375( )-078T | HLS76-375( )-078T |
| 5/16 | | HLA1086-312( )-094T | HLG222-312( )-094T | HLS76-312( )-094T |
| 11/32 | | HLA1086-343( )-094T | HLG222-343( )-094T | HLS76-343( )-094T |
| 3/8 | 3/32 | HLA1086-375( )-094T | HLG222-375( )-094T | HLS76-375( )-094T |
| 7/16 | | HLA1086-437( )-094T | HLG222-437( )-094T | HLS76-437( )-094T |
| 3/8 | 1/8 | HLA1086-375( )-125T | HLG222-375( )-125T | HLS76-375( )-125T |
| 7/16 | | HLA1086-437( )-125T | HLG222-437( )-125T | HLS76-437( )-125T |

# Hi-Lok Montagewerkzeuge
# HI-LOK INSTALLATION TOOLS

## INSTALLATION TOOLING

# SUPER HLA1097

**4 Inch Offset Driver Assembly with Flush Socket and Super-Key™ (T-Series)**

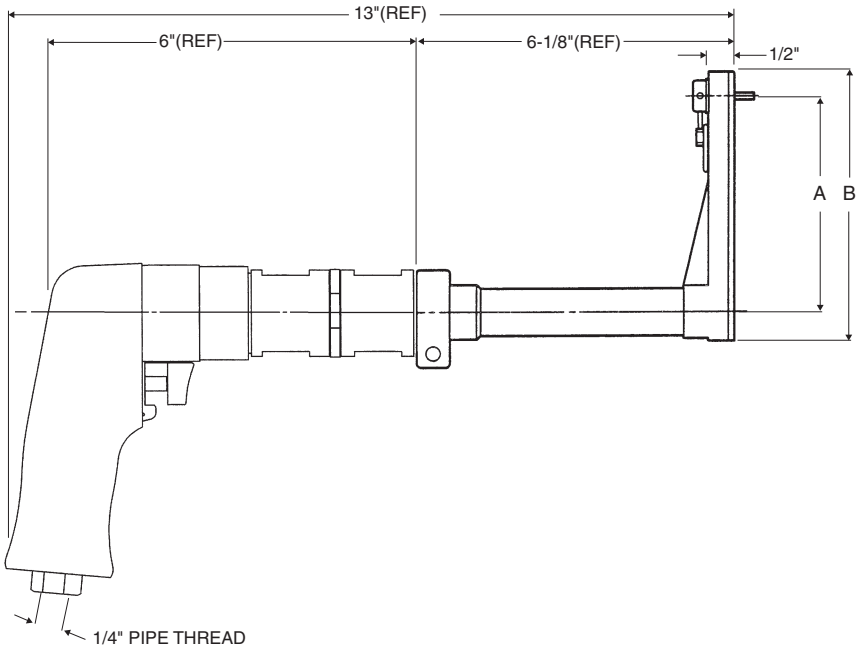


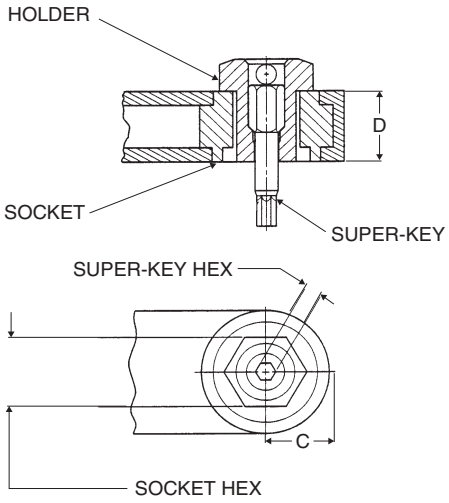


HLG168- ( )( )- ( ) T SOCKET ASSY

**TECHNICAL DATA**

| | |
|---|---|
| Operating Pressure ..... 90 PSIA | Horsepower Rating ..... 0.70 |
| **MAX. TORQUE RATING** ..... 300 in. lb (Motor) @90 PSIA | Air Consumption ..... 22 SCFM |
| Socket Speed ..... 250 RPM | Weight ..... 3.8 lb |

DRIVER BASIC PART NO. — SOCKET HEX REF. TABLE 1 — SUPER-KEY HEX REF. TABLE 1 — SUPER-KEY HEX REF. TABLE 1

**HLA1097 - 312 -078 T**

Example: complete driver assy. part no.

**ORDERING INFORMATION**

1. Match pin and collar hexes with Super Key Hex and Socket Hex.
2. See table 1 for Complete Driver Assy Part No.

| COLLAR Hex Size | A C to C | B OVERALL | C EDGE DISTANCE | D WIDTH |
|---|---|---|---|---|
| up to 11/32 | 4.470 | 5.502 | 0.450 | 0.500 |
| 3/8 and up | 4.512 | 5.594 | 0.500 | 0.500 |

**TABLE 1**

| COLLAR DRIVING HEX (Matches Socket Hex) | PIN RECESS HEX (Matches Super-Key Hex) | COMPLETE DRIVER ASSY. | OFFSET ADAPTOR & SOCKET ASSY. |
|---|---|---|---|
| 3/16 | 1/16 | HLA1097-187-062T | HLG168-187-062T |
| 7/32 | | HLA1097-218-062T | HLG168-218-062T |
| 1/4 | | HLA1097-250-062T | HLG168-250-062T |
| 9/32 | | HLA1097-281-062T | HLG168-281-062T |
| 5/16 | | HLA1097-312-062T | HLG168-312-062T |
| 11/32 | | HLA1097-343-062T | HLG168-343-062T |
| 7/32 | 5/64 | HLA1097-218-078T | HLG168-218-078T |
| 1/4 | | HLA1097-250-078T | HLG168-250-078T |
| 9/32 | | HLA1097-281-078T | HLG168-281-078T |
| 5/16 | | HLA1097-312-078T | HLG168-312-078T |
| 11/32 | | HLA1097-343-078T | HLG168-343-078T |
| 3/8 | | HLA1097-375-078T | HLG168-375-078T |
| 5/16 | 3/32 | HLA1097-312-094T | HLG168-312-094T |
| 11/32 | | HLA1097-343-094T | HLG168-343-094T |
| 3/8 | | HLA1097-375-094T | HLG168-375-094T |
| 7/16 | | HLA1097-437-094T | HLG168-437-094T |
| 3/8 | 1/8 | HLA1097-375-125T | HLG168-375-125T |
| 7/16 | | HLA1097-437-125T | HLG168-437-125T |

# Hi-Lok Montagewerkzeuge
# HI-LOK INSTALLATION TOOLS

INSTALLATION TOOLING

## SUPER HLA1201

**1 inch Offset Mini Driver Assembly with Thin Flush Socket and Super-Key™ (T-Series)**

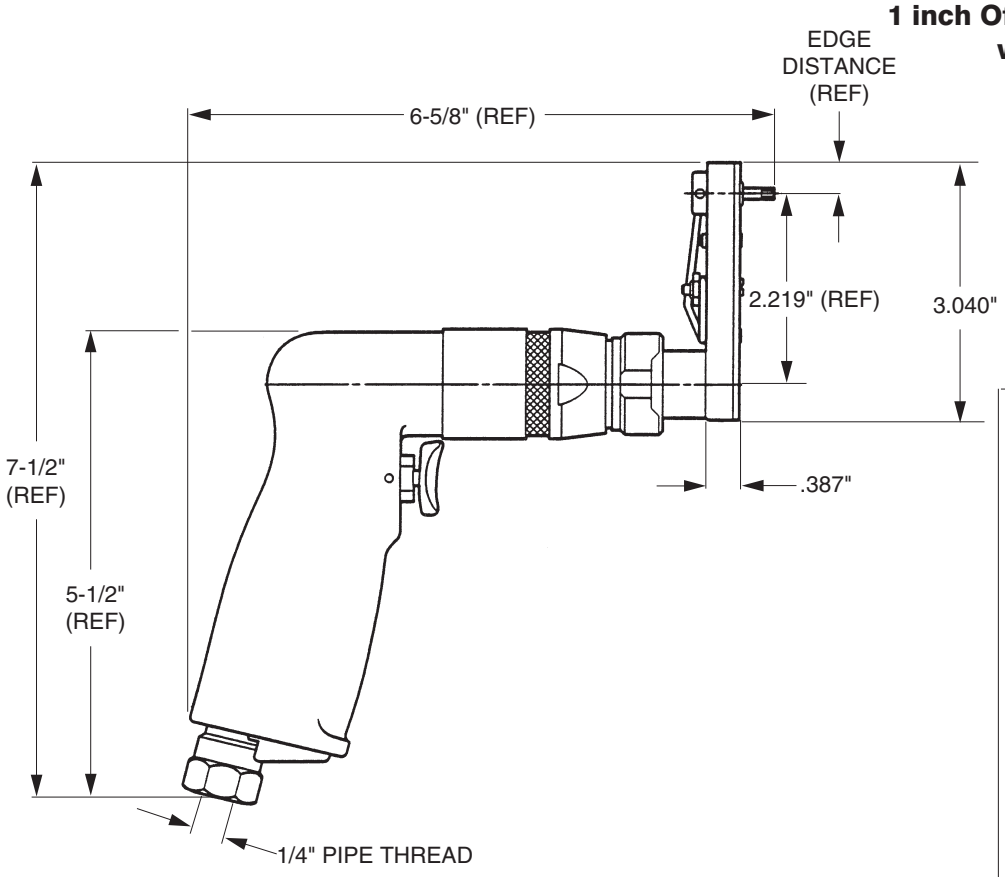


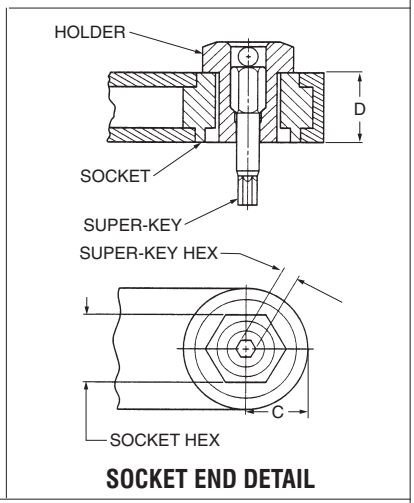


**SOCKET END DETAIL**

| Socket Size | A C to C | B Overall | C Edge Dist. | D Width |
|---|---|---|---|---|
| ALL | 1.094 | 2.000 | 0.360 | 0.387 |

### TECHNICAL DATA

Operating Pressure ..... 90 PSIA
**MAX. TORQUE RATING** ..... 60 in. lb (Motor) @90 PSIA
Socket Speed ..... 500 RPM
Horsepower Rating ..... 0.2
Air Consumption ..... 20 CFM
Weight ..... 2 lb

DRIVER BASIC PART NO. — SOCKET HEX REF. TABLE 1 — SUPER-KEY HEX REF. TABLE 1 — SUPER-KEY (T-SERIES)

**HLA1201-312-078-T**

Example: complete driver assy. part no.

### ORDERING INFORMATION

1. Match pin and collar hexes with Super-Key Hex and Socket Hex.
2. See table 1 for corresponding complete driver assy part no.

### TABLE 1

| COLLAR DRIVING HEX (Matches Socket Hex) | PIN RECESS HEX (Matches Super-Key Hex) | COMPLETE DRIVER ASSY. PART NO. | OFFSET ADAPTOR AND SOCKET ASSY. PART NO. |
|---|---|---|---|
| 3/16 | 1/16 | HLA1201-187-062T | HLG326-187-062T |
| 7/32 | | HLA1201-218-062T | HLG326-218-062T |
| 1/4 | | HLA1201-250-062T | HLG326-250-062T |
| 9/32 | | HLA1201-281-062T | HLG326-281-062T |
| 5/16 | | HLA1201-312-062T | HLG326-312-062T |
| 11/32 | | HLA1201-343-062T | HLG326-343-062T |
| 7/32 | 5/64 | HLA1201-218-078T | HLG326-218-078T |
| 1/4 | | HLA1201-250-078T | HLG326-250-078T |
| 9/32 | | HLA1201-281-078T | HLG326-281-078T |
| 5/16 | | HLA1201-312-078T | HLG326-312-078T |
| 11/32 | | HLA1201-343-078T | HLG326-343-078T |

Installation Tool with Socket Speed 250 RPM available on request

# Hi-Lok Montagewerkzeuge
# HI-LOK INSTALLATION TOOLS

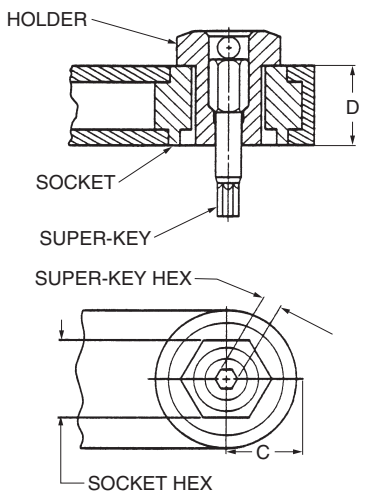


**SOCKET END DETAIL**

INSTALLATION TOOLING

## SUPER HLA1202

**2 Inch Offset Mini Driver Assembly with Thin Flush Socket and Super-Key™ (T-Series)**

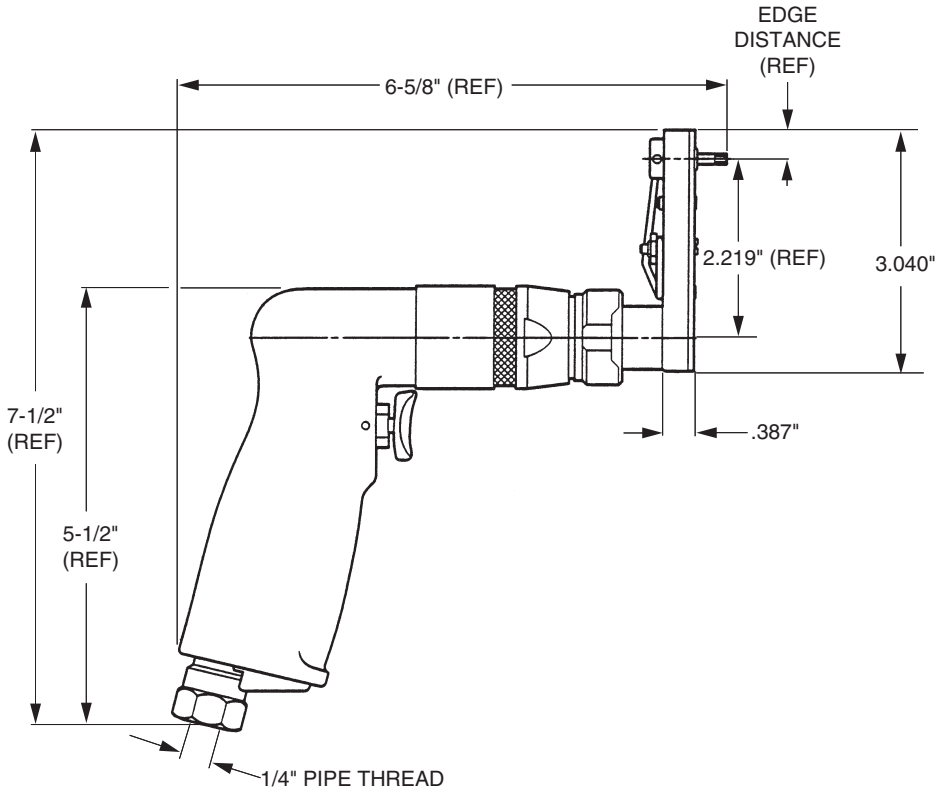


| Socket Size | A C to C | B Overall | C Edge Dist. | D Width |
|---|---|---|---|---|
| ALL | 2.219 | 3.040 | 0.360 | 0.387 |

**TECHNICAL DATA**

| | |
|---|---|
| Operating Pressure | 90 PSIA |
| **MAX. TORQUE RATING** (Motor) | 60 in. lb @90 PSIA |
| Socket Speed | 500 RPM |
| Horsepower Rating | 0.2 |
| Air Consumption | 20 CFM |
| Weight | 2 lb |

**TABLE 1**

| COLLAR DRIVING HEX (Matches Socket Hex) | PIN RECESS HEX (Matches Super-Key Hex) | COMPLETE DRIVER ASSY. PART NO. | OFFSET ADAPTOR AND SOCKET ASSY. PART NO. |
|---|---|---|---|
| 3/16 | 1/16 | HLA1202-187-062T | HLG327-187-062T |
| 7/32 | | HLA1202-218-062T | HLG327-218-062T |
| 1/4 | | HLA1202-250-062T | HLG327-250-062T |
| 9/32 | | HLA1202-281-062T | HLG327-281-062T |
| 5/16 | | HLA1202-312-062T | HLG327-312-062T |
| 11/32 | | HLA1202-343-062T | HLG327-343-062T |
| 7/32 | 5/64 | HLA1202-218-078T | HLG327-218-078T |
| 1/4 | | HLA1202-250-078T | HLG327-250-078T |
| 9/32 | | HLA1202-281-078T | HLG327-281-078T |
| 5/16 | | HLA1202-312-078T | HLG327-312-078T |
| 11/32 | | HLA1202-343-078T | HLG327-343-078T |

DRIVER BASIC PART NO. — SOCKET HEX REF. TABLE 1 — SUPER-KEY HEX REF. TABLE 1 — SUPER-KEY HEX (T-SERIES)

**HLA1202-312-078-T**

Example: complete driver assy. part no.

**ORDERING INFORMATION**

1. Match pin and collar hexes with Super-Key Hex and Socket Hex.
2. See table 1 for corresponding complete driver assy part no.

Installation Tool with Socket Speed 250 RPM available on request

# Hi-Lok Montagewerkzeuge
# HI-LOK INSTALLATION TOOLS

INSTALLATION TOOLING

## SUPER HLA1203

**1 Inch Offset Mini Driver Assembly with Multi-Length Socket and Super-Key™ (T-Series)**

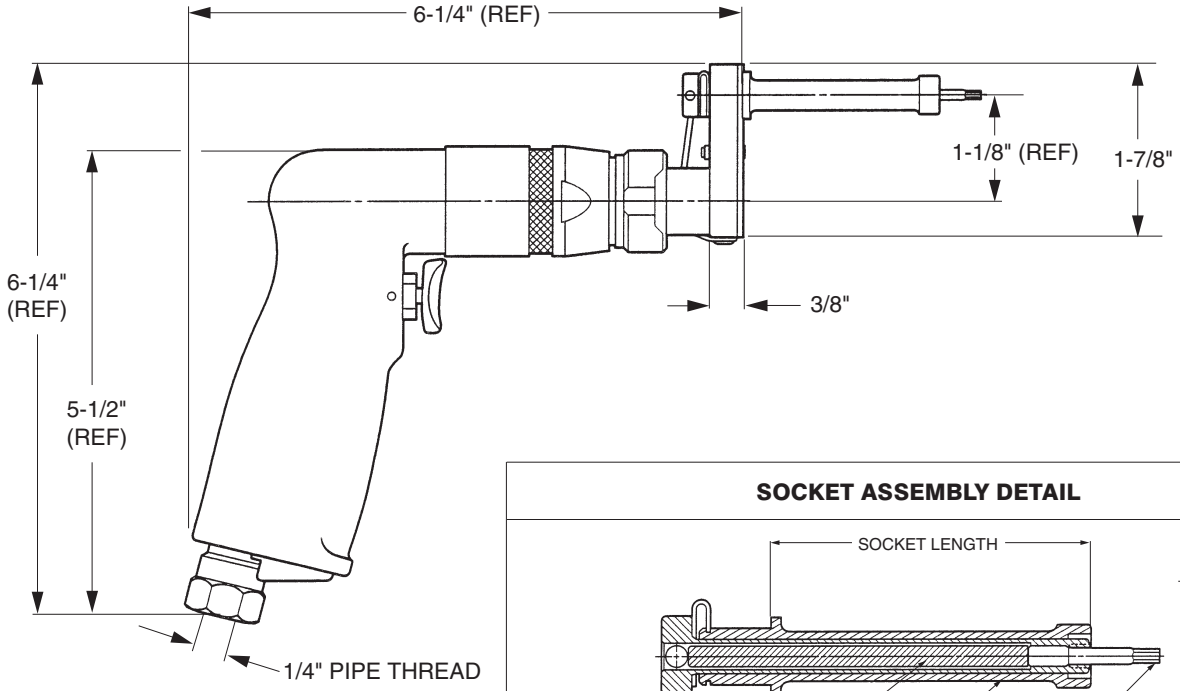


### SOCKET ASSEMBLY DETAIL




### TECHNICAL DATA

Operating Pressure ..... 90 PSIA
**MAX. TORQUE RATING** ..... 60 in. lb (Motor) @90 PSIA
Socket Speed ..... 500 RPM
Horsepower Rating ..... 0.2
Air Consumption ..... 20 CFM
Weight ..... 2 lb

DRIVER BASIC PART NO. | SOCKET HEX REF. TABLE 1 | SOCKET LENGTH REF. TABLE 2 | SUPER-KEY HEX REF. TABLE 1 | SUPER-KEY HEX REF. TABLE 1

**HLA1203-312 (B) - 078-T**

Example: complete driver assy. part no.

### ORDERING INFORMATION

1. Match pin and collar hexes with Super-Key Hex and Socket Hex.
2. See table 1 for corresponding complete driver assy part no.

**TABLE 2**

| | |
|---|---|
| A = 0.50 | E = 0.75 |
| B = 1.00 | F = 1.75 |
| C = 1.50 | X = 4.00 |
| D = 2.00 | |

**TABLE 1**

| COLLAR DRIVING HEX (Matches Socket Hex) | PIN RECESS HEX (Matches Super-Key Hex) | COMPLETE DRIVER ASSY. PART NO. | OFFSET ADAPTOR AND SOCKET ASSY. PART NO. |
|---|---|---|---|
| 7/32 | 1/16 | HLA1203-218-062T | HLS32-218( )-062T |
| 7/32 | 5/64 | HLA1203-218-078T | HLS32-218( )-078T |
| 1/4 | 1/16 | HLA1203-250-062T | HLS32-250( )-062T |
| 1/4 | 5/64 | HLA1203-250-078T | HLS32-250( )-078T |
| 9/32 | 1/16 | HLA1203-281-062T | HLS32-281( )-062T |
| 9/32 | 5/64 | HLA1203-281-078T | HLS32-281( )-078T |
| 5/16 | 1/16 | HLA1203-312-062T | HLS32-312( )-062T |
| 5/16 | 5/64 | HLA1203-312-078T | HLS32-312( )-078T |
| 5/16 | 3/32 | HLA1203-312-094T | HLS32-312( )-094T |
| 11/32 | 1/16 | HLA1203-343-062T | HLS32-343( )-062T |
| 11/32 | 5/64 | HLA1203-343-078T | HLS32-343( )-078T |
| 11/32 | 3/32 | HLA1203-343-094T | HLS32-343( )-094T |

Installation Tool with Socket Speed 250 RPM available on request

# Hi-Lok Montagewerkzeuge
# HI-LOK INSTALLATION TOOLS

INSTALLATION TOOLING

## HLA1204

**2 Inch Offset Mini Driver Assembly with Multi-Length Socket and Super-Key™ (T-Series)**

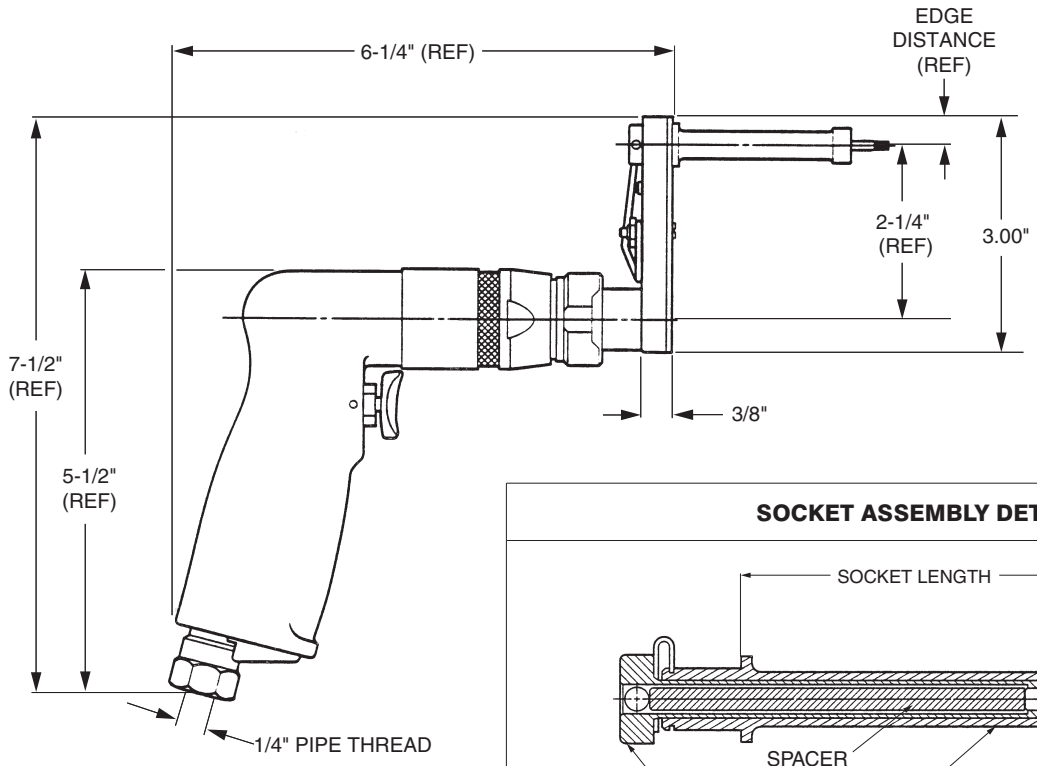


### SOCKET ASSEMBLY DETAIL

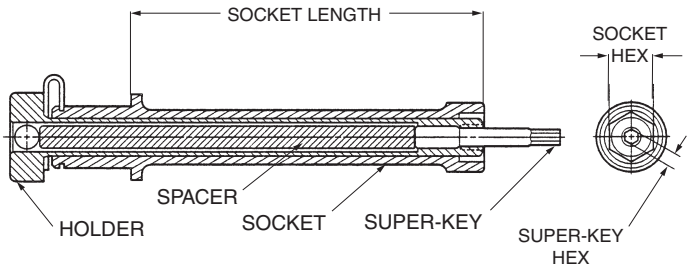


### TECHNICAL DATA

| | |
|---|---|
| Operating Pressure | 90 PSIA |
| **MAX. TORQUE RATING** (Motor) | 60 in. lb @90 PSIA |
| Socket Speed | 500 RPM |
| Horsepower Rating | 0.2 |
| Air Consumption | 20 CFM |
| Weight | 2 lb |

DRIVER BASIC PART NO. | SOCKET HEX REF. TABLE 1 | SOCKET LENGTH REF. TABLE 2 | SUPER-KEY HEX REF. TABLE 1 | SUPER-KEY HEX (T-SERIES)

**HLA1204-312 (B)-078 -T**

Example: complete driver assy. part no.

### ORDERING INFORMATION

1. Match pin and collar hexes with Super-Key Hex and Socket Hex.
2. See table 1 for corresponding complete driver assy part no.

**TABLE 2**

| | |
|---|---|
| A = 0.50 | E = 0.75 |
| B = 1.00 | F = 1.75 |
| C = 1.50 | X = 4.00 |
| D = 2.00 | |

**TABLE 1**

| COLLAR DRIVING HEX (Matches Socket Hex) | PIN RECESS HEX (Matches Super-Key Hex) | COMPLETE DRIVER ASSY. PART NO. | OFFSET ADAPTOR AND SOCKET ASSY. PART NO. |
|---|---|---|---|
| 7/32 | 1/16 | HLA1203-218-062T | HLS32-218( )-062T |
| 7/32 | 5/64 | HLA1203-218-078T | HLS32-218( )-078T |
| 1/4 | 1/16 | HLA1203-250-062T | HLS32-250( )-062T |
| 1/4 | 5/64 | HLA1203-250-078T | HLS32-250( )-078T |
| 9/32 | 1/16 | HLA1203-281-062T | HLS32-281( )-062T |
| 9/32 | 5/64 | HLA1203-281-078T | HLS32-281( )-078T |
| 5/16 | 1/16 | HLA1203-312-062T | HLS32-312( )-062T |
| 5/16 | 5/64 | HLA1203-312-078T | HLS32-312( )-078T |
| 5/16 | 3/32 | HLA1203-312-094T | HLS32-312( )-094T |
| 11/32 | 1/16 | HLA1203-343-062T | HLS32-343( )-062T |
| 11/32 | 5/64 | HLA1203-343-078T | HLS32-343( )-078T |
| 11/32 | 3/32 | HLA1203-343-094T | HLS32-343( )-094T |

Installation Tool with Socket Speed 250 RPM available on request

# Hi-Lok Montagewerkzeuge
# HI-LOK INSTALLATION TOOLS

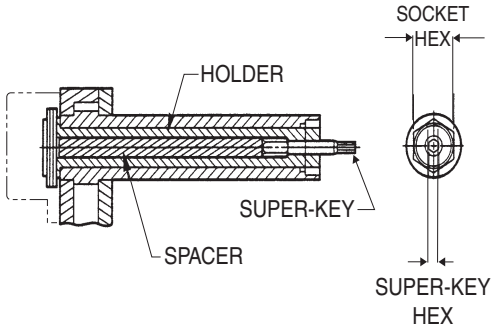


HLG208 - ( )( )- ( ) T SOCKET ASSY

INSTALLATION TOOLING

## SUPER HLA2068

**Heavy Duty 2 Inch Offset Driver Assembly with 2 Inch Extended Socket and Super-Key™ (T-Series)**

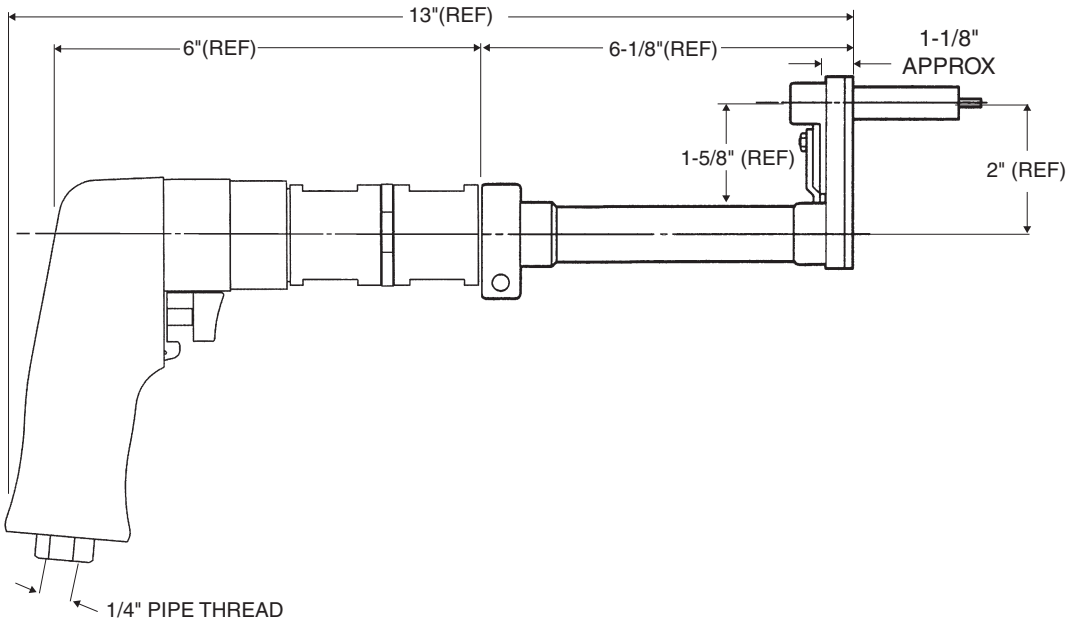


DRIVER BASIC PART NO. — SOCKET HEX REF. TABLE 1 — SUPER-KEY HEX REF. TABLE 1 — SUPER-KEY (T-SERIES)

**HLA2068-312-078-T**

Example: complete driver assy. part no.

### ORDERING INFORMATION

1. Match pin and collar hexes with Super-Key Hex and Socket Hex.
2. See table 1 for corresponding complete driver assy part no.

### TECHNICAL DATA

| | |
|---|---|
| Operating Pressure ..... 90 PSIA | Horsepower Rating ..... 0.70 |
| **MAX. TORQUE RATING** ..... 300 in. lb (Motor) @90 PSIA | Air Consumption ..... 22 SCFM |
| Socket Speed ..... 250 RPM | Weight ..... 3.8 lb |

### TABLE 1

| COLLAR DRIVING HEX (Matches Socket Hex) | PIN RECESS HEX (Matches Super-Key Hex) | COMPLETE DRIVER ASSY. | OFFSET ADAPTOR & SOCKET ASSY. |
|---|---|---|---|
| 5/16 | 1/16 | HLA2068-312-062T | HLG208-312-062T |
| 11/32 | | HLA2068-343-062T | HLG208-343-062T |
| 5/16 | 5/64 | HLA2068-312-078T | HLG208-312-078T |
| 11/32 | | HLA2068-343-078T | HLG208-343-078T |
| 3/8 | | HLA2068-375-078T | HLG208-375-078T |
| 5/16 | 3/32 | HLA2068-312-094T | HLG208-312-094T |
| 11/32 | | HLA2068-343-094T | HLG208-343-094T |
| 3/8 | | HLA2068-375-094T | HLG208-375-094T |
| 7/16 | | HLA2068-437-094T | HLG208-437-094T |
| 3/8 | 1/8 | HLA2068-375-125T | HLG208-375-125T |
| 7/16 | | HLA2068-437-125T | HLG208-437-125T |

# Hi-Lok Montagewerkzeuge
# HI-LOK INSTALLATION TOOLS

## INSTALLATION TOOLING
## SUPER HLA3023

**6 Inch Offset Back Drive Driver Assembly with Extended Socket and Super-Key™ (T-Series)**

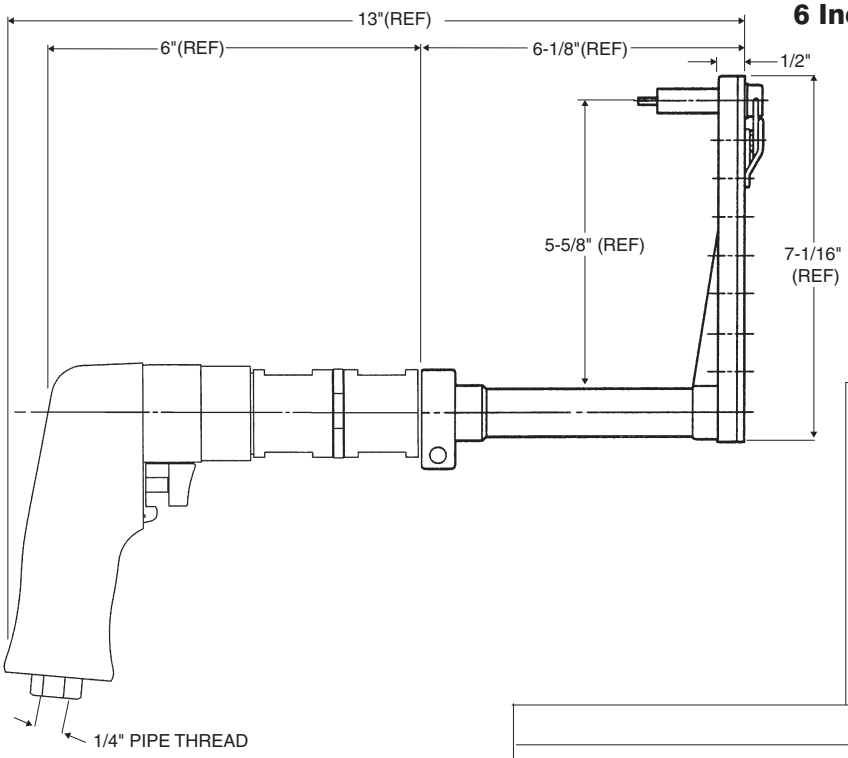


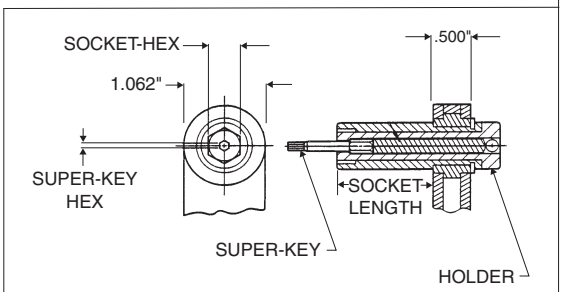


HLS76- ( )( )- ( )T SOCKET ASSY

### TECHNICAL DATA

| | | | |
|---|---|---|---|
| Operating Pressure | 90 PSIA | Horsepower Rating | 0.70 |
| **MAX. TORQUE RATING** (Motor) | 300 in. lb @90 PSIA | Air Consumption | 22 SCFM |
| Socket Speed | 250 RPM | Weight | 3.8 lb |

HLA3023 - 312 (A) - 078-T

DRIVER BASIC PART NO. | SOCKET HEX (REF TABLE 1) | SOCKET LENGTH CODE (REF TABLE 2) | SUPER-KEY HEX (REF TABLE 1) | SUPER-KEY (T-SERIES)

Example: complete driver assy part no.

**ORDERING INFORMATION**

1. Match pin and collar hexes with Super-Key Hex and Socket Hex.
2. See table 1 for corresponding complete driver assy part no.

**TABLE 2**

| | |
|---|---|
| A = 0.50 | E = 0.75 |
| B = 1.00 | F = 1.75 |
| C = 1.50 | X = 4.00 |
| D = 2.00 | |

**TABLE 1**

| COLLAR DRIVING HEX (Matches Socket Hex) | PIN RECESS HEX (Matches Super-Key Hex) | COMPLETE DRIVER ASSY. PART NO. | OFFSET ADAPTOR & SOCKET ASSY. PART NO. | EXTENDED SOCKET ASSY. PART NO. |
|---|---|---|---|---|
| 3/16 | 1/16 | HLA3023-187( )-062T | HLG329-187( )-062T | HLS76-187( )-062T |
| 7/32 | | HLA3023-218( )-062T | HLG329-218( )-062T | HLS76-218( )-062T |
| 1/4 | | HLA3023-250( )-062T | HLG329-250( )-062T | HLS76-250( )-062T |
| 9/32 | | HLA3023-281( )-062T | HLG329-281( )-062T | HLS76-281( )-062T |
| 5/16 | | HLA3023-312( )-062T | HLG329-312( )-062T | HLS76-312( )-062T |
| 11/32 | | HLA3023-343( )-062T | HLG329-343( )-062T | HLS76-343( )-062T |
| 7/32 | 5/64 | HLA3023-218( )-078T | HLG329-218( )-078T | HLS76-218( )-078T |
| 1/4 | | HLA3023-250( )-078T | HLG329-250( )-078T | HLS76-250( )-078T |
| 9/32 | | HLA3023-281( )-078T | HLG329-281( )-078T | HLS76-281( )-078T |
| 5/16 | | HLA3023-312( )-078T | HLG329-312( )-078T | HLS76-312( )-078T |
| 11/32 | | HLA3023-343( )-078T | HLG329-343( )-078T | HLS76-343( )-078T |
| 3/8 | | HLA3023-375( )-078T | HLG329-375( )-078T | HLS76-375( )-078T |
| 5/16 | 3/32 | HLA3023-312( )-094T | HLG329-312( )-094T | HLS76-312( )-094T |
| 11/32 | | HLA3023-343( )-094T | HLG329-343( )-094T | HLS76-343( )-094T |
| 3/8 | | HLA3023-375( )-094T | HLG329-375( )-094T | HLS76-375( )-094T |
| 7/16 | | HLA3023-437( )-094T | HLG329-437( )-094T | HLS76-437( )-094T |
| 3/8 | 1/8 | HLA3023-375( )-125T | HLG329-375( )-125T | HLS76-375( )-125T |
| 7/16 | | HLA3023-437( )-125T | HLG329-437( )-125T | HLS76-437( )-125T |

# Hi-Lok Montagewerkzeuge
# HI-LOK INSTALLATION TOOLS

INSTALLATION TOOLING

## SUPER HLA3025

**6 Inch Offset Driver Assembly with Multi-Length Socket and Super-Key™ (T-Series)**

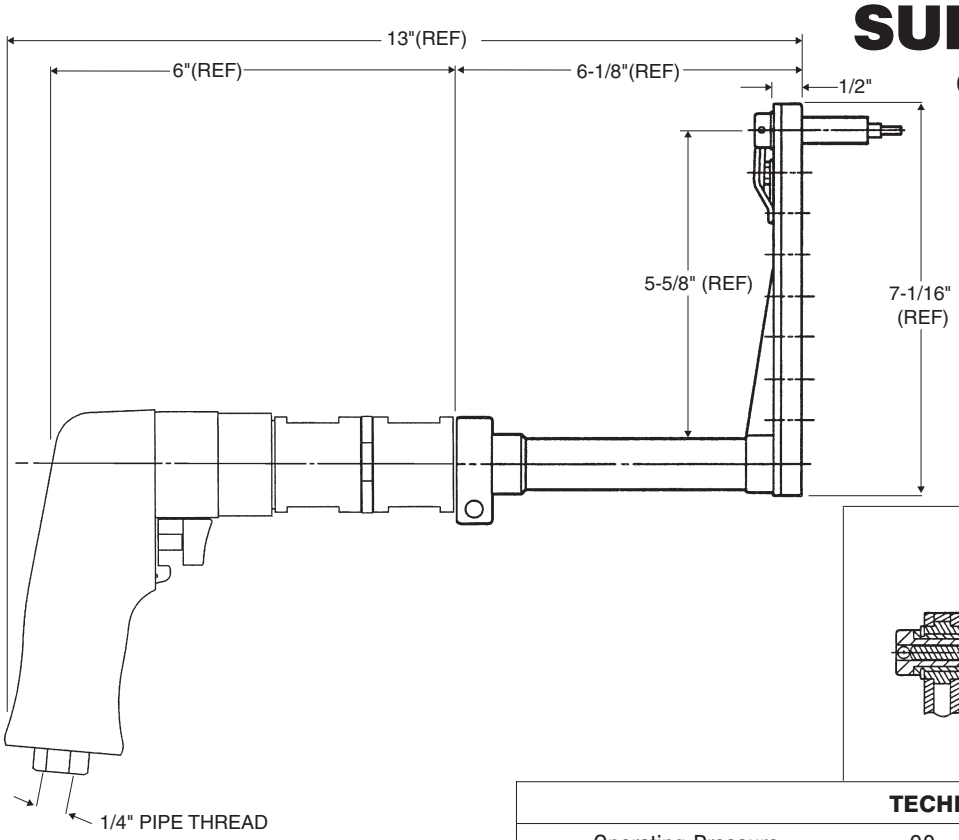


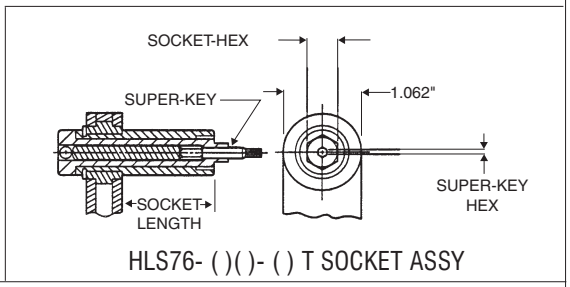


HLS76- ( )( )- ( ) T SOCKET ASSY

### TECHNICAL DATA

| | | | |
|---|---|---|---|
| Operating Pressure | 90 PSIA | Horsepower Rating | 0.70 |
| **MAX. TORQUE RATING** (Motor) | 300 in. lb @90 PSIA | Air Consumption | 22 SCFM |
| Socket Speed | 250 RPM | Weight | 3.8 lb |

DRIVER BASIC PART NO. — SOCKET HEX (REF TABLE 1 OR 2) — SOCKET LENGTH CODE (REF TABLE 2) — SUPER-KEY HEX (REF TABLE 1 OR 2) — SUPER-KEY (T-SERIES)

**HLA3025-312(A)-078-T**

Example: complete driver assy part no.

### ORDERING INFORMATION

1. Match pin and collar hexes with Super-Key Hex and Socket Hex.
2. See table 1 for corresponding complete driver assy part no.

**TABLE 2**

| | |
|---|---|
| A = 0.50 | E = 0.75 |
| B = 1.00 | F = 1.75 |
| C = 1.50 | X = 4.00 |
| D = 2.00 | |

**TABLE 1**

| COLLAR DRIVING HEX (Matches Socket Hex) | PIN RECESS HEX (Matches Super-Key Hex) | COMPLETE DRIVER ASSY. PART NO. | OFFSET ADAPTOR & SOCKET ASSY. PART NO. | EXTENDED SOCKET ASSY. PART NO. |
|---|---|---|---|---|
| 3/16 | 1/16 | HLA3025-187( )-062T | HLG331-187( )-062T | HLS76-187( )-062T |
| 7/32 | | HLA3025-218( )-062T | HLG331-218( )-062T | HLS76-218( )-062T |
| 1/4 | | HLA3025-250( )-062T | HLG331-250( )-062T | HLS76-250( )-062T |
| 9/32 | | HLA3025-281( )-062T | HLG331-281( )-062T | HLS76-281( )-062T |
| 5/16 | | HLA3025-312( )-062T | HLG331-312( )-062T | HLS76-312( )-062T |
| 11/32 | | HLA3025-343( )-062T | HLG331-343( )-062T | HLS76-343( )-062T |
| 7/32 | 5/64 | HLA3025-218( )-078T | HLG331-218( )-078T | HLS76-218( )-078T |
| 1/4 | | HLA3025-250( )-078T | HLG331-250( )-078T | HLS76-250( )-078T |
| 9/32 | | HLA3025-281( )-078T | HLG331-281( )-078T | HLS76-281( )-078T |
| 5/16 | | HLA3025-312( )-078T | HLG331-312( )-078T | HLS76-312( )-078T |
| 11/32 | | HLA3025-343( )-078T | HLG331-343( )-078T | HLS76-343( )-078T |
| 3/8 | | HLA3025-375( )-078T | HLG331-375( )-078T | HLS76-375( )-078T |
| 5/16 | 3/32 | HLA3025-312( )-094T | HLG331-312( )-094T | HLS76-312( )-094T |
| 11/32 | | HLA3025-343( )-094T | HLG331-343( )-094T | HLS76-343( )-094T |
| 3/8 | | HLA3025-375( )-094T | HLG331-375( )-094T | HLS76-375( )-094T |
| 7/16 | | HLA3025-437( )-094T | HLG331-437( )-094T | HLS76-437( )-094T |
| 3/8 | 1/8 | HLA3025-375( )-125T | HLG331-375( )-125T | HLS76-375( )-125T |
| 7/16 | | HLA3025-437( )-125T | HLG331-437( )-125T | HLS76-437( )-125T |

# Hi-Lok Montagewerkzeuge
# HI-LOK INSTALLATION TOOLS

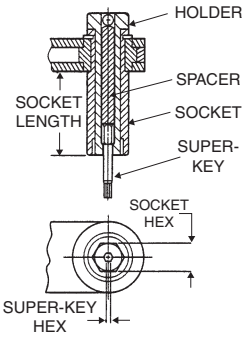


**SOCKET END DETAIL**

**INSTALLATION TOOLING**

## SUPER HLA2002

**Straight Ratchet Wrench Driver Assembly with Multi-Length Socket and Super-Key™ (T-Series)**

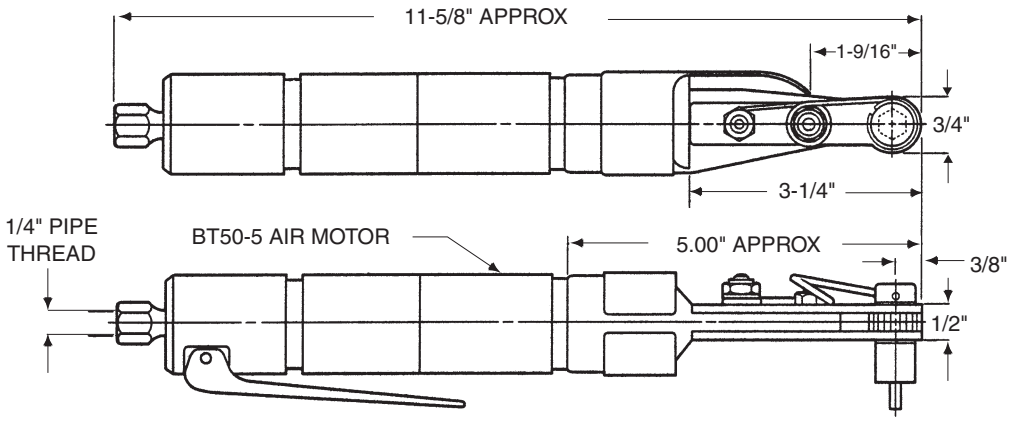


**TECHNICAL DATA**

| | | | |
|---|---|---|---|
| Operating Pressure | 90 PSIA | Horsepower Rating | 0.50 |
| **MAX. TORQUE RATING** (Motor) | 110 in. lb @90 PSIA | Air Consumption | 22 SCFM |
| Socket Speed | 250 RPM | Weight | 2 lb |

DRIVER BASIC PART NO. | SOCKET HEX REF. TABLE 1 | SOCKET LENGTH (REF TABLE 2) | SUPER-KEY HEX (REF TABLE 1) | SUPER-KEY (T-SERIES)

**HLA2002-312(A)-078T**

Example: complete driver assy. part no.

**ORDERING INFORMATION**

1. Match pin and collar hexes with Super-Key Hex and Socket Hex.
2. See table 1 for corresponding complete driver assy part no.

**TABLE 2**

| | |
|---|---|
| A = 0.50 | E = 0.75 |
| B = 1.00 | F = 1.75 |
| C = 1.50 | X = 4.00 |
| D = 2.00 | |

**TABLE 1**

| COLLAR DRIVING HEX (Matches Socket Hex) | PIN RECESS HEX (Matches Super-Key Hex) | COMPLETE DRIVER ASSY. PART NO. | OFFSET ADAPTOR & SOCKET ASSY. PART NO. | EXTENDED SOCKET ASSY. PART NO. |
|---|---|---|---|---|
| 3/16 | 1/16 | HLA2002-187( )-062T | HLR252-187( )-062T | HLS76-187( )-062T |
| 7/32 | | HLA2002-218( )-062T | HLR252-218( )-062T | HLS76-218( )-062T |
| 1/4 | | HLA2002-250( )-062T | HLR252-250( )-062T | HLS76-250( )-062T |
| 9/32 | | HLA2002-281( )-062T | HLR252-281( )-062T | HLS76-281( )-062T |
| 5/16 | | HLA2002-312( )-062T | HLR252-312( )-062T | HLS76-312( )-062T |
| 11/32 | | HLA2002-343( )-062T | HLR252-343( )-062T | HLS76-343( )-062T |
| 7/32 | 5/64 | HLA2002-218( )-078T | HLR252-218( )-078T | HLS76-218( )-078T |
| 1/4 | | HLA2002-250( )-078T | HLR252-250( )-078T | HLS76-250( )-078T |
| 9/32 | | HLA2002-281( )-078T | HLR252-281( )-078T | HLS76-281( )-078T |
| 5/16 | | HLA2002-312( )-078T | HLR252-312( )-078T | HLS76-312( )-078T |
| 11/32 | | HLA2002-343( )-078T | HLR252-343( )-078T | HLS76-343( )-078T |
| 3/8 | | HLA2002-375( )-078T | HLR252-375( )-078T | HLS76-375( )-078T |
| 5/16 | 3/32 | HLA2002-312( )-094T | HLR252-312( )-094T | HLS76-312( )-094T |
| 11/32 | | HLA2002-343( )-094T | HLR252-343( )-094T | HLS76-343( )-094T |
| 3/8 | | HLA2002-375( )-094T | HLR252-375( )-094T | HLS76-375( )-094T |
| 7/16 | | HLA2002-437( )-094T | HLR252-437( )-094T | HLS76-437( )-094T |

# Hi-Lok Montagewerkzeuge
# HI-LOK INSTALLATION TOOLS

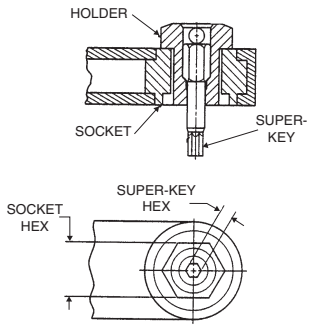


**SOCKET END DETAIL**

## INSTALLATION TOOLING

# SUPER HLA2006

**Straight Ratchet Wrench Driver Assembly with Flush Socket and Super-Key™ (T-Series)**

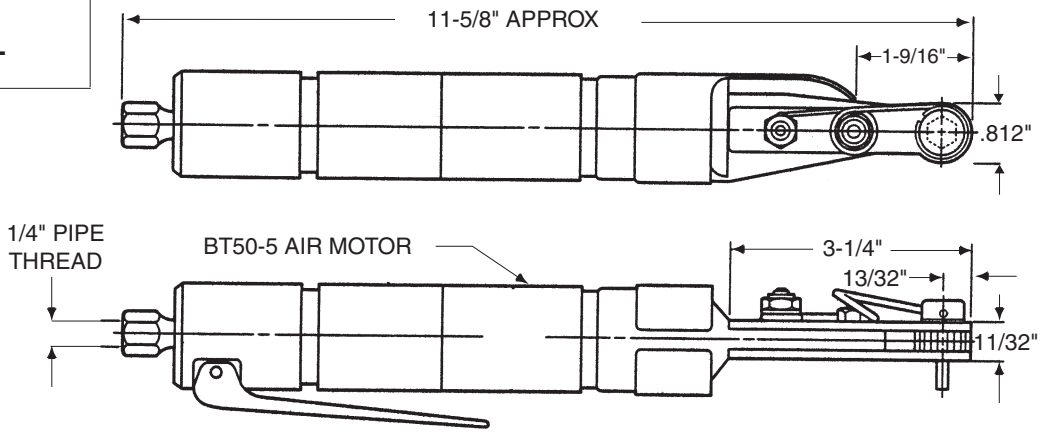


**TECHNICAL DATA**

| | | | |
|---|---|---|---|
| Operating Pressure | 90 PSIA | Horsepower Rating | 0.50 |
| **MAX. TORQUE RATING** (Motor) | 110 in. lb @90 PSIA | Air Consumption | 22 SCFM |
| Socket Speed | 250 RPM | Weight | 2 lb |

**TABLE 1**

| COLLAR DRIVING HEX (Matches Socket Hex) | PIN RECESS HEX (Matches Super-Key Hex) | COMPLETE DRIVER ASSY. PART NO. | OFFSET ADAPTOR & SOCKET ASSY. PART NO. |
|---|---|---|---|
| 3/16 | 1/16 | HLA2006-187-062T | HLR256-187-062T |
| 7/32 | | HLA2006-218-062T | HLR256-218-062T |
| 1/4 | | HLA2006-250-062T | HLR256-250-062T |
| 9/32 | | HLA2006-281-062T | HLR256-281-062T |
| 5/16 | | HLA2006-312-062T | HLR256-312-062T |
| 11/32 | | HLA2006-343-062T | HLR256-343-062T |
| 7/32 | 5/64 | HLA2006-218-078T | HLR256-218-078T |
| 1/4 | | HLA2006-250-078T | HLR256-250-078T |
| 9/32 | | HLA2006-281-078T | HLR256-281-078T |
| 5/16 | | HLA2006-312-078T | HLR256-312-078T |
| 11/32 | | HLA2006-343-078T | HLR256-343-078T |
| 3/8 | | HLA2006-375-078T | HLR256-375-078T |
| 5/16 | 3/32 | HLA2006-312-094T | HLR256-312-094T |
| 11/32 | | HLA2006-343-094T | HLR256-343-094T |
| 3/8 | | HLA2006-375-094T | HLR256-375-094T |
| 7/16 | | HLA2006-437-094T | HLR256-437-094T |

DRIVER BASIC PART NO. — SOCKET HEX REF. TABLE 1 — SUPER-KEY HEX REF. TABLE 1 — SUPER-KEY (T-SERIES)

**HLA2006-312-078T**

Example: complete driver assy. part no.

### ORDERING INFORMATION

1. Match pin and collar hexes with Super-Key Hex and Socket Hex.
2. See table 1 for corresponding complete driver assy part no.

# Hi-Lok Montagewerkzeuge
# HI-LOK INSTALLATION TOOLS

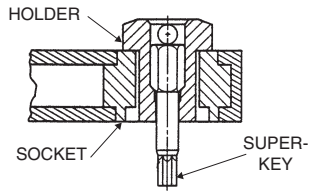


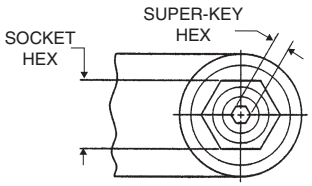


**SOCKET END DETAIL**

INSTALLATION TOOLING

## SUPER HLA2008

**20° Offset Ratchet Wrench Driver Assembly with Flush Socket and Super-Key™ (T-Series)**

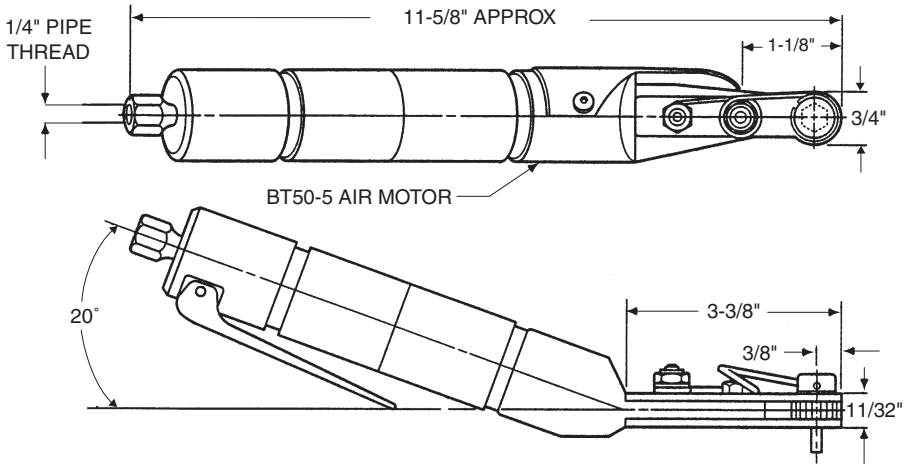


**TECHNICAL DATA**

| | |
|---|---|
| Operating Pressure ..... 90 PSIA | Horsepower Rating ..... 0.50 |
| **MAX. TORQUE RATING** ..... 110 in. lb (Motor) @90 PSIA | Air Consumption ..... 22 SCFM |
| Socket Speed ..... 250 RPM | Weight ..... 2 lb |

**TABLE 1**

| COLLAR DRIVING HEX (Matches Socket Hex) | PIN RECESS HEX (Matches Super-Key Hex) | COMPLETE DRIVER ASSY. PART NO. | OFFSET ADAPTOR & SOCKET ASSY. PART NO. |
|---|---|---|---|
| 3/16 | 1/16 | HLA2008-187-062T | HLR255-187-062T |
| 7/32 | | HLA2008-218-062T | HLR255-218-062T |
| 1/4 | | HLA2008-250-062T | HLR255-250-062T |
| 9/32 | | HLA2008-281-062T | HLR255-281-062T |
| 5/16 | | HLA2008-312-062T | HLR255-312-062T |
| 11/32 | | HLA2008-343-062T | HLR255-343-062T |
| 7/32 | 5/64 | HLA2008-218-078T | HLR255-218-078T |
| 1/4 | | HLA2008-250-078T | HLR255-250-078T |
| 9/32 | | HLA2008-281-078T | HLR255-281-078T |
| 5/16 | | HLA2008-312-078T | HLR255-312-078T |
| 11/32 | | HLA2008-343-078T | HLR255-343-078T |
| 3/8 | | HLA2008-375-078T | HLR255-375-078T |
| 5/16 | 3/32 | HLA2008-312-094T | HLR255-312-094T |
| 11/32 | | HLA2008-343-094T | HLR255-343-094T |
| 3/8 | | HLA2008-375-094T | HLR255-375-094T |
| 7/16 | | HLA2008-437-094T | HLR255-437-094T |

DRIVER BASIC PART NO. — SOCKET HEX REF. TABLE 1 — SUPER-KEY HEX REF. TABLE 1 — SUPER-KEY (T-SERIES)

**HLA2008 - 312 - 078T**

Example: complete driver assy. part no.

**ORDERING INFORMATION**

1. Match pin and collar hexes with Super-Key Hex and Socket Hex.
2. See table 1 for corresponding complete driver assy part no.

# Hi-Lok Montagewerkzeuge
# HI-LOK INSTALLATION TOOLS

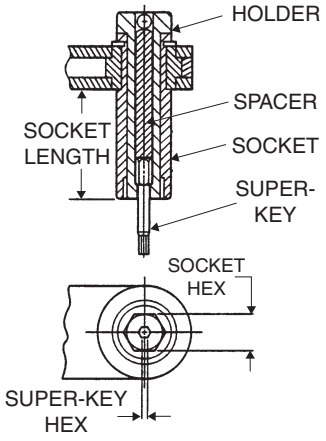


**SOCKET END DETAIL**

## INSTALLATION TOOLING

# SUPER HLA2016

**20° Offset Ratchet Wrench Driver Assembly with Multi-Length Socket and Super-Key™ (T-Series)**

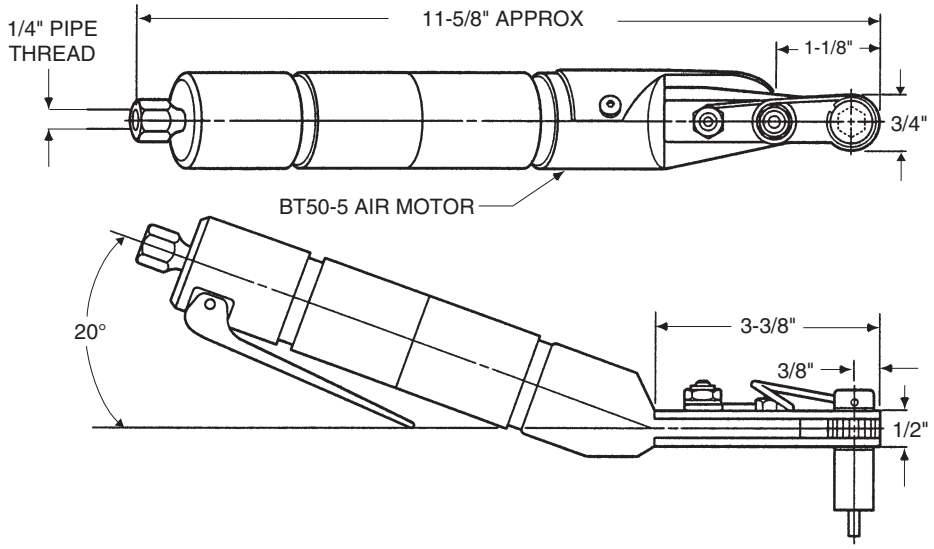


DRIVER BASIC PART NO. — SOCKET HEX REF. TABLE 1 — SOCKET LENGTH (REF TABLE 2) — SUPER-KEY HEX (REF TABLE 1) — SUPER-KEY (T-SERIES)

**HLA2016-312(E)-078T**

Example: complete driver assy. part no.

### ORDERING INFORMATION

1. Match pin and collar hexes with Super-Key Hex and Socket Hex.
2. See table 1 for corresponding complete driver assy part no.

**TABLE 2**

| | |
|---|---|
| A = 0.50 | E = 0.75 |
| B = 1.00 | F = 1.75 |
| C = 1.50 | X = 4.00 |
| D = 2.00 | |

### TECHNICAL DATA

| | | | |
|---|---|---|---|
| Operating Pressure | 90 PSIA | Horsepower Rating | 0.50 |
| **MAX. TORQUE RATING** (Motor) | 110 in. lb @90 PSIA | Air Consumption | 22 SCFM |
| Socket Speed | 250 RPM | Weight | 2 lb |

**TABLE 1**

| COLLAR DRIVING HEX (Matches Socket Hex) | PIN RECESS HEX (Matches Super-Key Hex) | COMPLETE DRIVER ASSY. PART NO. | OFFSET ADAPTOR & SOCKET ASSY. PART NO. | EXTENDED SOCKET ASSY. PART NO. |
|---|---|---|---|---|
| 3/16 | 1/16 | HLA2016-187( )-062T | HLR251-187( )-062T | HLS76-187( )-062T |
| 7/32 | | HLA2016-218( )-062T | HLR251-218( )-062T | HLS76-218( )-062T |
| 1/4 | | HLA2016-250( )-062T | HLR251-250( )-062T | HLS76-250( )-062T |
| 9/32 | | HLA2016-281( )-062T | HLR251-281( )-062T | HLS76-281( )-062T |
| 5/16 | | HLA2016-312( )-062T | HLR251-312( )-062T | HLS76-312( )-062T |
| 11/32 | | HLA2016-343( )-062T | HLR251-343( )-062T | HLS76-343( )-062T |
| 7/32 | 5/64 | HLA2016-218( )-078T | HLR251-218( )-078T | HLS76-218( )-078T |
| 1/4 | | HLA2016-250( )-078T | HLR251-250( )-078T | HLS76-250( )-078T |
| 9/32 | | HLA2016-281( )-078T | HLR251-281( )-078T | HLS76-281( )-078T |
| 5/16 | | HLA2016-312( )-078T | HLR251-312( )-078T | HLS76-312( )-078T |
| 11/32 | | HLA2016-343( )-078T | HLR251-343( )-078T | HLS76-343( )-078T |
| 3/8 | | HLA2016-375( )-078T | HLR251-375( )-078T | HLS76-375( )-078T |
| 5/16 | 3/32 | HLA2016-312( )-094T | HLR251-312( )-094T | HLS76-312( )-094T |
| 11/32 | | HLA2016-343( )-094T | HLR251-343( )-094T | HLS76-343( )-094T |
| 3/8 | | HLA2016-375( )-094T | HLR251-375( )-094T | HLS76-375( )-094T |
| 7/16 | | HLA2016-437( )-094T | HLR251-437( )-094T | HLS76-437( )-094T |

# Hi-Lok Montagewerkzeuge
# HI-LOK INSTALLATION TOOLS

**INSTALLATION TOOLING**

## HLA2026

**Small 20° Offset Ratchet Wrench**
**Tool Assembly with "Quick Change"**
**Thru-Hex Extended Socket**

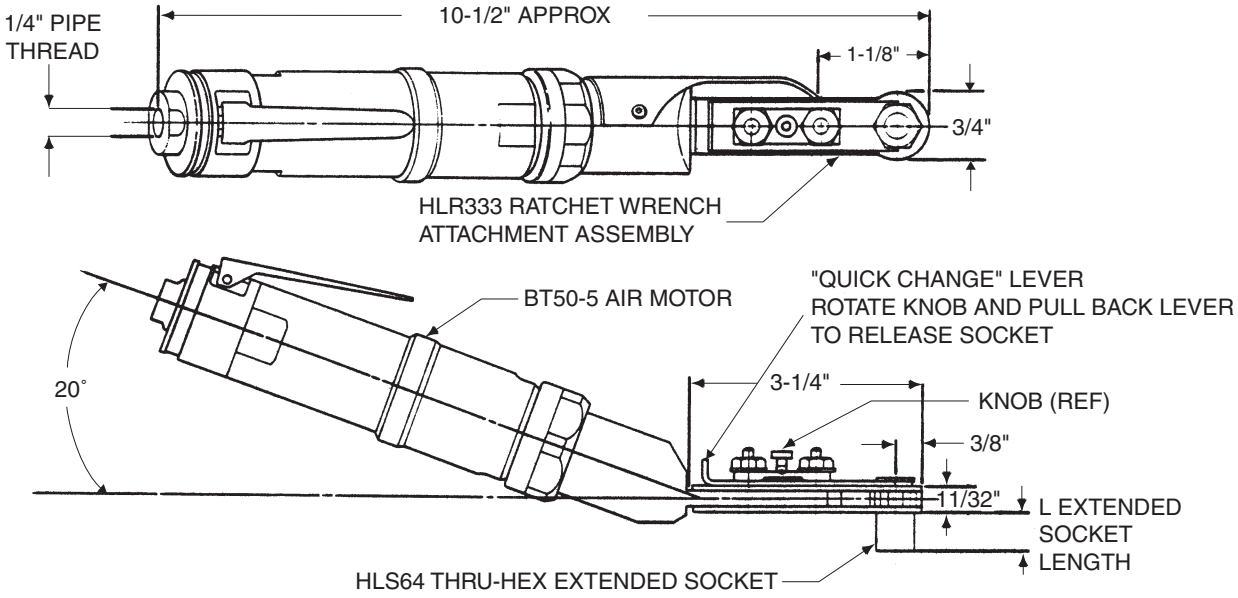


DRIVER BASIC PART NO. — "M" SOCKET HEX REF. TABLE 1 — SOCKET LENGTH (REF TABLE 2)

**HLA2026-312 (A)**

Example: complete driver assy. part no.

### ORDERING INFORMATION

1. See table 1 for "M" socket hex to match collar driving hex dimension.
2. See table 2 for socket length code.

**TABLE 2**

| | |
|---|---|
| A = 0.50 | E = 0.75 |
| B = 1.00 | F = 1.75 |
| C = 1.50 | X = 4.00 |
| D = 2.00 | |

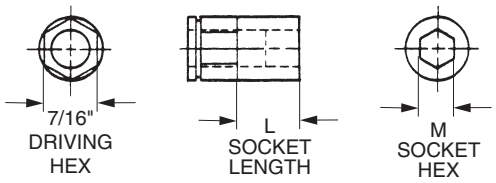


**HLS64 THRU-HEX EXTENDED SOCKET**

**TECHNICAL DATA**

| | |
|---|---|
| Operating Pressure ..... 90 PSIA | Horsepower Rating ..... 0.50 |
| **MAX. TORQUE RATING** ..... 110 in. lb (Motor) @90 PSIA | Air Consumption ..... 22 SCFM |
| Socket Speed ..... 250 RPM | Weight ..... 2 lb |

**TABLE 1**

| "M" SOCKET HEX (Matches Collar Driving Hex) | COMPLETE TOOL ASSY. PART NO. | RATCHET WRENCH ATTACHMENT ASSY. PART NO. (Ref.) | EXTENDED SOCKET ASSY. PART NO. |
|---|---|---|---|
| 3/16 | HLA2026-187( ) | HLR333-187( ) | HLS64-187( ) |
| 7/32 | HLA2026-218( ) | HLR333-218( ) | HLS64-218( ) |
| 1/4 | HLA2026-250( ) | HLR333-250( ) | HLS64-250( ) |
| 9/32 | HLA2026-281( ) | HLR333-281( ) | HLS64-281( ) |
| 5/16 | HLA2026-312( ) | HLR333-312( ) | HLS64-312( ) |
| 11/32 | HLA2026-343( ) | HLR333-343( ) | HLS64-343( ) |

# Hi-Lok Montagewerkzeuge
# HI-LOK INSTALLATION TOOLS

INSTALLATION TOOLING

## SUPER HLA2033

**Small 20° Offset Ratchet Wrench Tool Assembly with Interference Fit Extra Thin Socket**

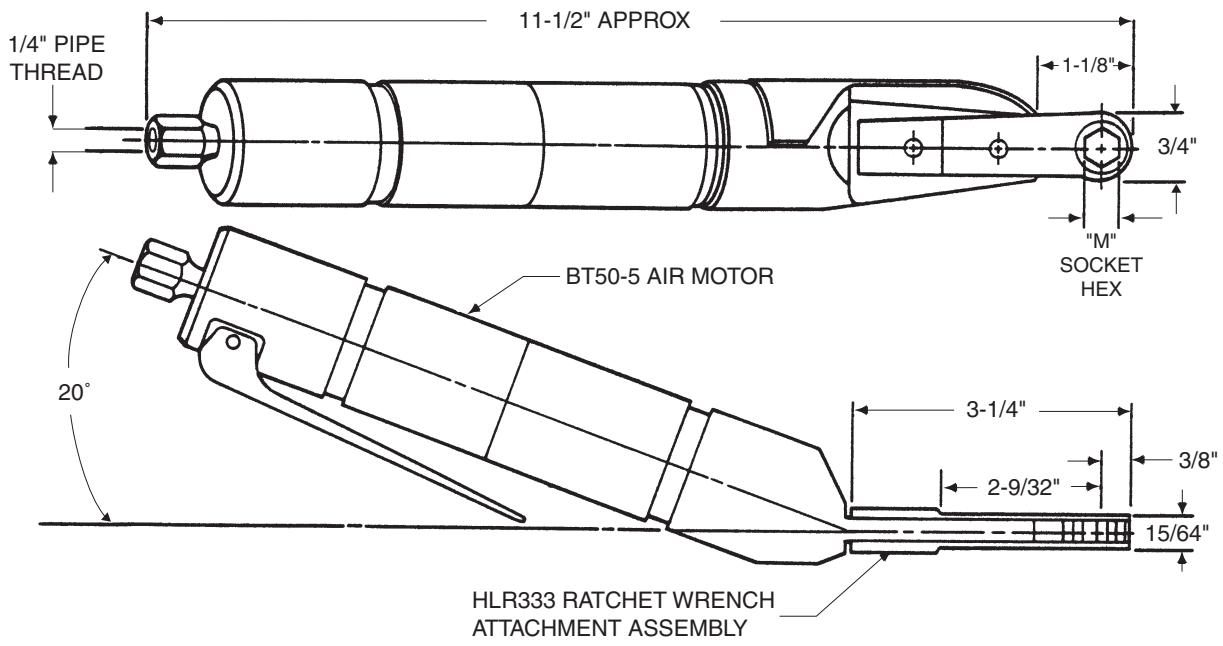


DRIVER BASIC PART NO.
"M" SOCKET HEX REF. TABLE 1

**HLA2033-312**

Example: complete driver assy. part no.

**ORDERING INFORMATION**

See table 1 for "M" socket hex to match collar driving hex dimensions

| TECHNICAL DATA | | | |
|---|---|---|---|
| Operating Pressure | 90 PSIA | Horsepower Rating | 0.50 |
| **MAX. TORQUE RATING** (Motor) | 110 in. lb @90 PSIA | Air Consumption | 22 SCFM |
| Socket Speed | 250 RPM | Weight | 2 lb |

**TABLE 1**

| "M" SOCKET HEX (Matches Collar Driving Hex) | COMPLETE TOOL ASSEMBLY Part No. | RATCHET WRENCH ATTACHMENT ASSY. Part No. (Ref.) |
|---|---|---|
| 5/16 | HLA2033-312 | HLR231-312 |
| 11/32 | HLA2033-343 | HLR231-343 |
| 3/8 | HLA2033-375 | HLR231-375 |

# Hi-Lok Montagewerkzeuge
# HI-LOK INSTALLATION TOOLS

INSTALLATION TOOLING

## SUPER HLA2073

**Medium 20° Offset Ratchet Wrench Driver Assembly with Thin Flush Socket and Super-Key™ (T-Series)**

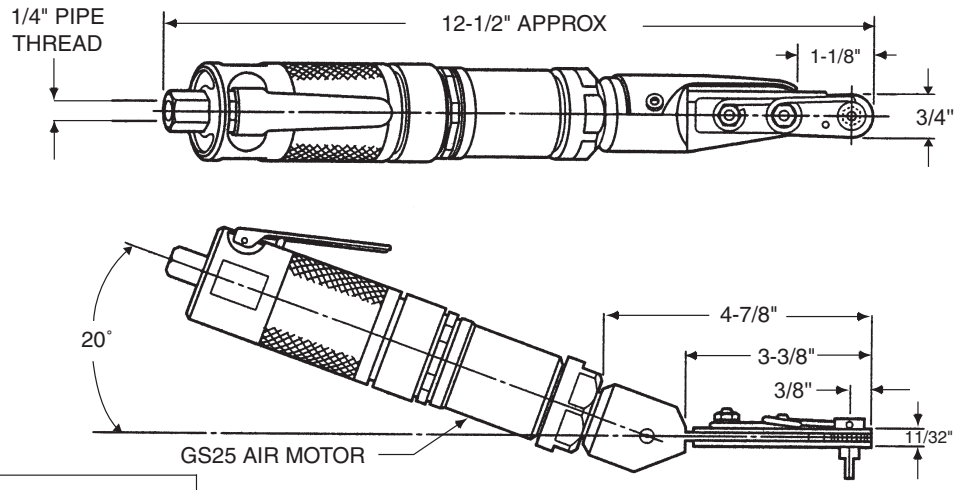


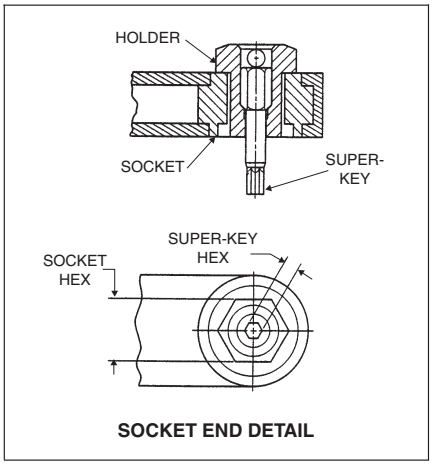


**SOCKET END DETAIL**

| TECHNICAL DATA | | | |
|---|---|---|---|
| Operating Pressure | 90 PSIA | Horsepower Rating | 0.50 |
| **MAX. TORQUE RATING** (Motor) | 220 in. lb @90 PSIA | Air Consumption | 22 SCFM |
| Socket Speed | 250 RPM | Weight | 2 lb |

**TABLE 1**

| COLLAR DRIVING HEX (Matches Socket Hex) | PIN RECESS HEX (Matches Super-Key Hex) | COMPLETE DRIVER ASSY. PART NO. | RATCHET WRENCH ATTACHMENT ASSY. PART NO. |
|---|---|---|---|
| 3/16 | 1/16 | HLA2073-187-062T | HLR255-187-062T |
| 7/32 | | HLA2073-218-062T | HLR255-218-062T |
| 1/4 | | HLA2073-250-062T | HLR255-250-062T |
| 9/32 | | HLA2073-281-062T | HLR255-281-062T |
| 5/16 | | HLA2073-312-062T | HLR255-312-062T |
| 11/32 | | HLA2073-343-062T | HLR255-343-062T |
| 7/32 | 5/64 | HLA2073-218-078T | HLR255-218-078T |
| 1/4 | | HLA2073-250-078T | HLR255-250-078T |
| 9/32 | | HLA2073-281-078T | HLR255-281-078T |
| 5/16 | | HLA2073-312-078T | HLR255-312-078T |
| 11/32 | | HLA2073-343-078T | HLR255-343-078T |
| 3/8 | | HLA2073-375-078T | HLR255-375-078T |
| 5/16 | 3/32 | HLA2073-312-094T | HLR255-312-094T |
| 11/32 | | HLA2073-343-094T | HLR255-343-094T |
| 3/8 | | HLA2073-375-094T | HLR255-375-094T |
| 7/16 | | HLA2073-437-094T | HLR255-437-094T |
| 1/2 | | HLA2073-500-094T | HLR255-500-094T |
| 3/8 | 1/8 | HLA2073-375-125T | HLR255-375-125T |
| 7/16 | | HLA2073-437-125T | HLR255-437-125T |

DRIVER BASIC PART NO. — SOCKET HEX REF. TABLE 1 — SUPER-KEY HEX REF. TABLE 1 — SUPER-KEY (T-SERIES)

**HLA2073 - 312 - 078 -T**

Example: complete driver assy. part no.

**ORDERING INFORMATION**

1. Match pin and collar hexes with Super-Key Hex and Socket Hex.
2. See table 1 for corresponding complete driver assy part no.

# Hi-Lok Montagewerkzeuge
# HI-LOK INSTALLATION TOOLS

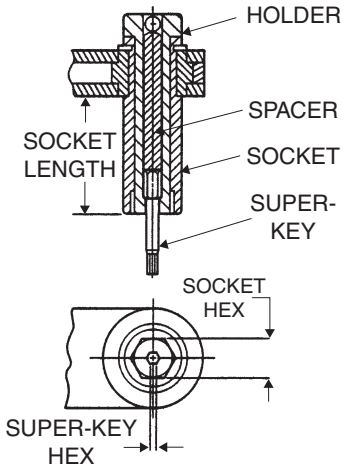


INSTALLATION TOOLING

## SUPER HLA2075

**Medium 20° Offset Ratchet Wrench Driver Assembly with Multi-length Socket and Super-Key™ (T-Series)**

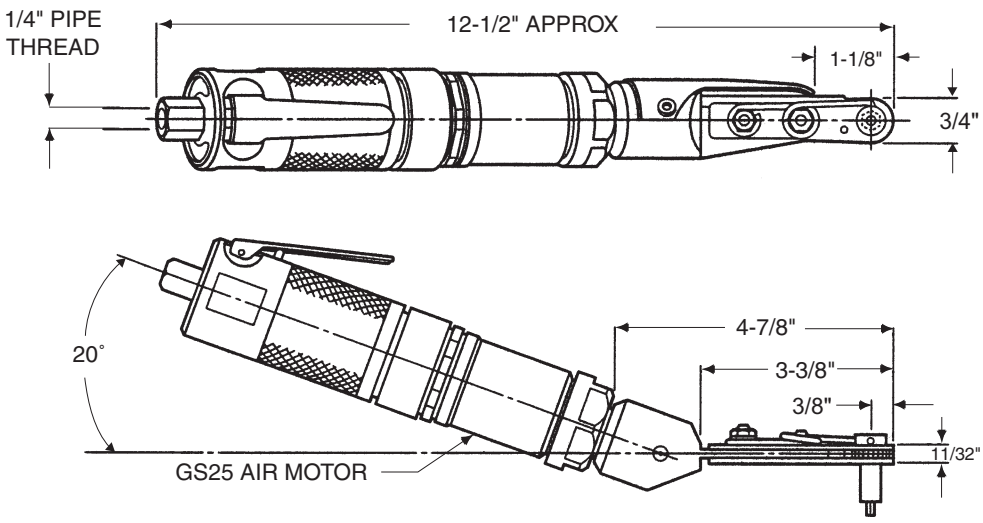


**TECHNICAL DATA**

| | | | |
|---|---|---|---|
| Operating Pressure | 90 PSIA | Horsepower Rating | 0.50 |
| **MAX. TORQUE RATING** (Motor) | 220 in. lb @90 PSIA | Air Consumption | 22 SCFM |
| Socket Speed | 250 RPM | Weight | 2 lb |

DRIVER BASIC PART NO. — SOCKET HEX REF. TABLE 1 — SOCKET LENGTH (REF TABLE 2) — SUPER-KEY HEX REF. TABLE 1. — SUPER-KEY ( T-SERIES)

**HLA2075-312 (A)-078T**

Example: complete driver assy. part no.

**ORDERING INFORMATION**

1. Match pin and collar hexes with Super-Key Hex and Socket Hex.
2. See table 1 for corresponding complete driver assy part no.

**TABLE 2**

| | |
|---|---|
| A = 0.50 | E = 0.75 |
| B = 1.00 | F = 1.75 |
| C = 1.50 | X = 4.00 |
| D = 2.00 | |

**TABLE 1**

| COLLAR DRIVING HEX (Matches Socket Hex) | PIN RECESS HEX (Matches Super-Key Hex) | COMPLETE DRIVER ASSY. PART NO. | OFFSET ADAPTOR & SOCKET ASSY. PART NO. | EXTENDED SOCKET ASSY. PART NO. |
|---|---|---|---|---|
| 3/16 | 1/16 | HLA2075-187( )-062T | HLR206-187( )-062T | HLS78-187( )-062T |
| 7/32 | | HLA2075-218( )-062T | HLR206-218( )-062T | HLS78-218( )-062T |
| 1/4 | | HLA2075-250( )-062T | HLR206-250( )-062T | HLS78-250( )-062T |
| 9/32 | | HLA2075-281( )-062T | HLR206-281( )-062T | HLS78-281( )-062T |
| 5/16 | | HLA2075-312( )-062T | HLR206-312( )-062T | HLS78-312( )-062T |
| 11/32 | | HLA2075-343( )-062T | HLR206-343( )-062T | HLS78-343( )-062T |
| 7/32 | 5/64 | HLA2075-218( )-078T | HLR206-218( )-078T | HLS78-218( )-078T |
| 1/4 | | HLA2075-250( )-078T | HLR206-250( )-078T | HLS78-250( )-078T |
| 9/32 | | HLA2075-281( )-078T | HLR206-281( )-078T | HLS78-281( )-078T |
| 5/16 | | HLA2075-312( )-078T | HLR206-312( )-078T | HLS78-312( )-078T |
| 11/32 | | HLA2075-343( )-078T | HLR206-343( )-078T | HLS78-343( )-078T |
| 3/8 | | HLA2075-375( )-078T | HLR206-375( )-078T | HLS78-375( )-078T |
| 5/16 | 3/32 | HLA2075-312( )-094T | HLR206-312( )-094T | HLS78-312( )-094T |
| 11/32 | | HLA2075-343( )-094T | HLR206-343( )-094T | HLS78-343( )-094T |
| 3/8 | | HLA2075-375( )-094T | HLR206-375( )-094T | HLS78-375( )-094T |
| 7/16 | | HLA2075-437( )-094T | HLR206-437( )-094T | HLS78-437( )-094T |
| 1/2 | | HLA2075-500( )-094T | HLR206-500( )-094T | HLS78-500( )-094T |
| 3/8 | 1/8 | HLA2075-375( )-125T | HLR206-375( )-125T | HLS78-375( )-125T |
| 7/16 | | HLA2075-437( )-125T | HLR206-437( )-125T | HLS78-437( )-125T |
| 1/2 | | HLA2075-500( )-125T | HLR206-500( )-125T | HLS78-500( )-125T |

# Hi-Lok Montagewerkzeuge
# HI-LOK INSTALLATION TOOLS

INSTALLATION TOOLING

## HLA3000

**Large Straight Ratchet Wrench Tool Assembly with Flush Socket and Super-Key™ (T-Series)**

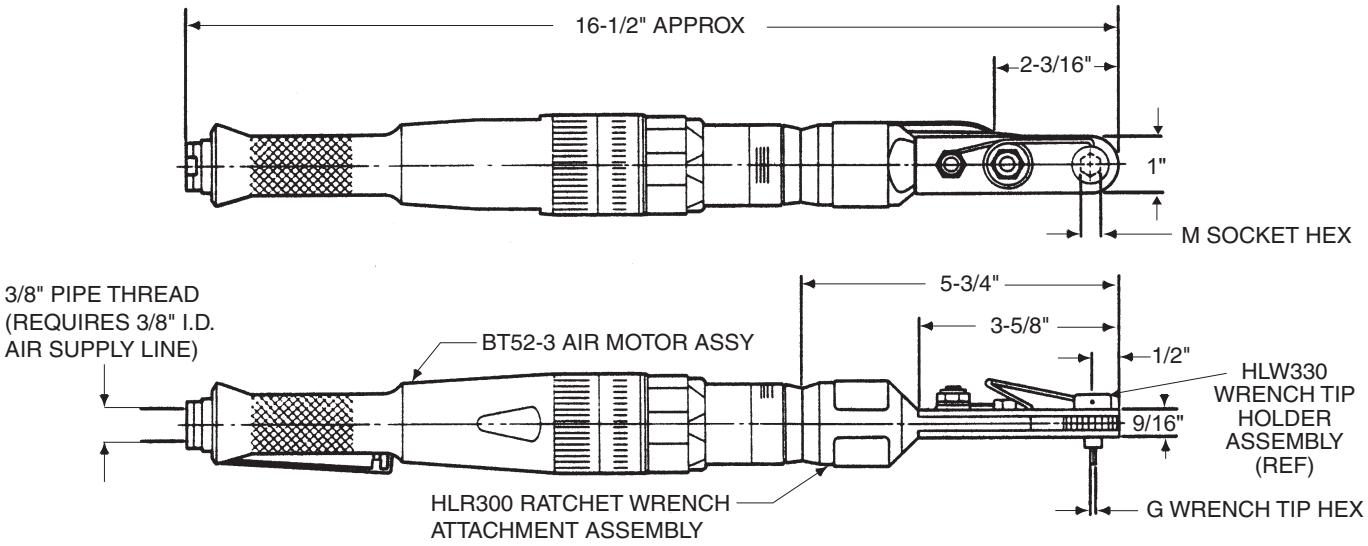


DRIVER BASIC PART NO. — SOCKET HEX REF. TABLE 1 — SUPER-KEY HEX REF. TABLE 1 — SUPER-KEY (T-SERIES)

**HLA3000-437-156T**

Example: complete driver assy. part no.

### ORDERING INFORMATION

1. Match pin and collar hexes with Super-Key Hex and Socket Hex.
2. See table 1 for corresponding complete driver assy part no.

**TECHNICAL DATA**

| | |
|---|---|
| Operating Pressure ..... 90 PSIA | Horsepower Rating ..... 0.70 |
| **MAX. TORQUE RATING** ..... 300 in. lb (Motor) @90 PSIA | Air Consumption ..... 22 SCFM |
| Socket Speed ..... 250 RPM | Weight ..... 3.8 lb |

**TABLE 1**

| "M" SOCKET HEX (Matches Collar Driving Hex) | "G" WRENCH TIP HEX (Matches Pin Recess Hex) | COMPLETE TOOL ASSY. PART NO. | RATCHET WRENCH ATTACHMENT ASSY. PART NO. (Ref.) |
|---|---|---|---|
| 3/8 | 1/8 | HLA3000-375-125T | HLR300-375-125T |
| 7/16 | | HLA3000-437-125T | HLR300-437-125T |
| 1/2 | | HLA3000-500-125T | HLR300-500-125T |
| 9/16 | | HLA3000-562-125T | HLR300-562-125T |
| 7/16 | 5/32 | HLA3000-437-156T | HLR300-437-156T |
| 1/2 | | HLA3000-500-156T | HLR300-500-156T |
| 9/16 | | HLA3000-562-156T | HLR300-562-156T |
| 5/8 | | HLA3000-625-156T | HLR300-625-156T |

# Hi-Lok Montagewerkzeuge
# HI-LOK INSTALLATION TOOLS

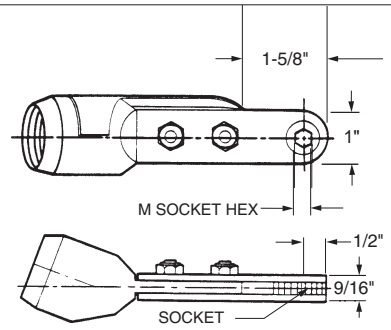


**TOOL ASSY. WITH THRU-HEX SOCKET, LESS WRENCH TIP HOLDER ASSY.**

## INSTALLATION TOOLING

# HLA3020

**Large 20° Offset Ratchet Wrench Tool Assembly with Flush Socket**

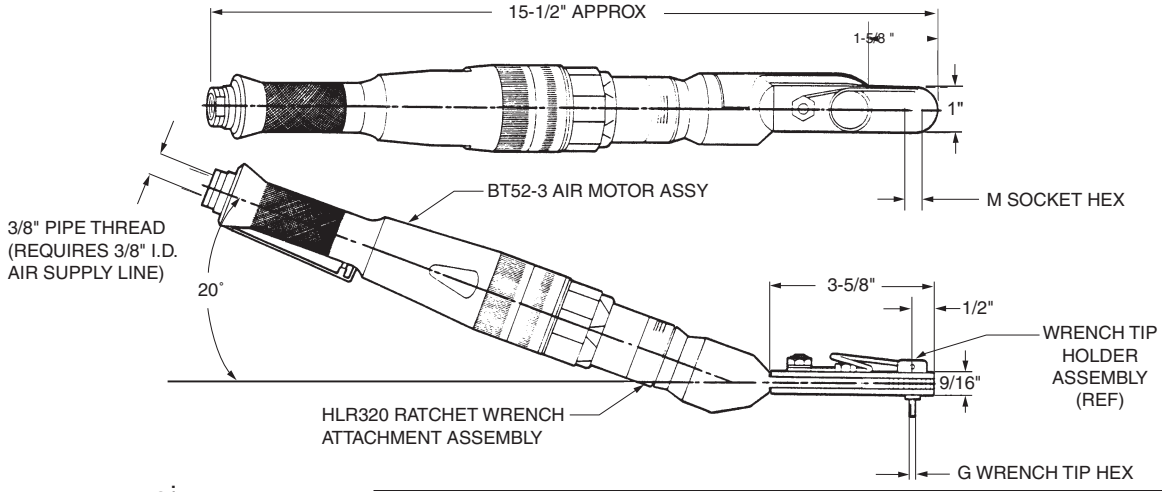


DRIVER BASIC PART NO. — SOCKET HEX REF. TABLE 1 OR 2 — G WRENCH TIP HEX REF. TABLE 1 OR 2.

**HLA3020 - 437- 156T**

Example 1: complete driver assy. part no.

### ORDERING INFORMATION

1. Determine collar driving hex dimensions of the fasteners to be installed.
2. See table 1 for "M" socket hex to match collar driving hex dimensions. Determine complete tool assembly part no. See example 1.
3. See table 2 for complete tool assembly part no.s to obtain an Offset Adaptor Assembly featuring a thru-hex socket, less finder pin and leaf spring.
4. See example 2.

**TABLE 2**

| "M" SOCKET HEX (Matches Collar Driving Hex) | COMPLETE TOOL ASSY. PART NO. | RATCHET WRENCH ATTACHMENT ASSY. PART NO. (Ref.) |
|---|---|---|
| 3/8 | HLA3020H-375 | HLRA320H-375 |
| 7/16 | HLA3020H-437 | HLRA320H-437 |
| 1/2 | HLA3020H-500 | HLRA320H-500 |
| 9/16 | HLA3020H-562 | HLRA320H-562 |
| 5/8 | HLA3020H-625 | HLRA320H-625 |

**TECHNICAL DATA**

| | |
|---|---|
| Operating Pressure ..... 90 PSIA | Horsepower Rating ..... 0.70 |
| **MAX. TORQUE RATING** ..... 300 in. lb (Motor) @90 PSIA | Air Consumption ..... 22 SCFM |
| Socket Speed ..... 250 RPM | Weight ..... 3.8 lb |

**TABLE 1**

| "M" SOCKET HEX (Matches Collar Driving Hex) | "G" WRENCH TIP HEX (Matches Pin Recess Hex) | COMPLETE TOOL ASSY. PART NO. | RATCHET WRENCH ATTACHMENT ASSY. PART NO. (Ref.) |
|---|---|---|---|
| 3/8 | 1/8 | HLA3020-375-125T | HLRA320-375-125T |
| 7/16 | | HLA3020-437-125T | HLRA320-437-125T |
| 1/2 | | HLA3020-500-125T | HLRA320-500-125T |
| 9/16 | | HLA3020-562-125T | HLRA320-562-125T |
| 7/16 | 5/32 | HLA3020-437-156T | HLRA320-437-156T |
| 1/2 | | HLA3020-500-156T | HLRA320-500-156T |
| 9/16 | | HLA3020-562-156T | HLRA320-562-156T |
| 5/8 | | HLA3020-625-156T | HLRA320-625-156T |

# Hi-Lok Montagewerkzeuge
# HI-LOK INSTALLATION TOOLS

**INSTALLATION TOOLING**

## HLA3502

**Large Straight Ratchet Wrench Tool Assembly with Extended Socket**

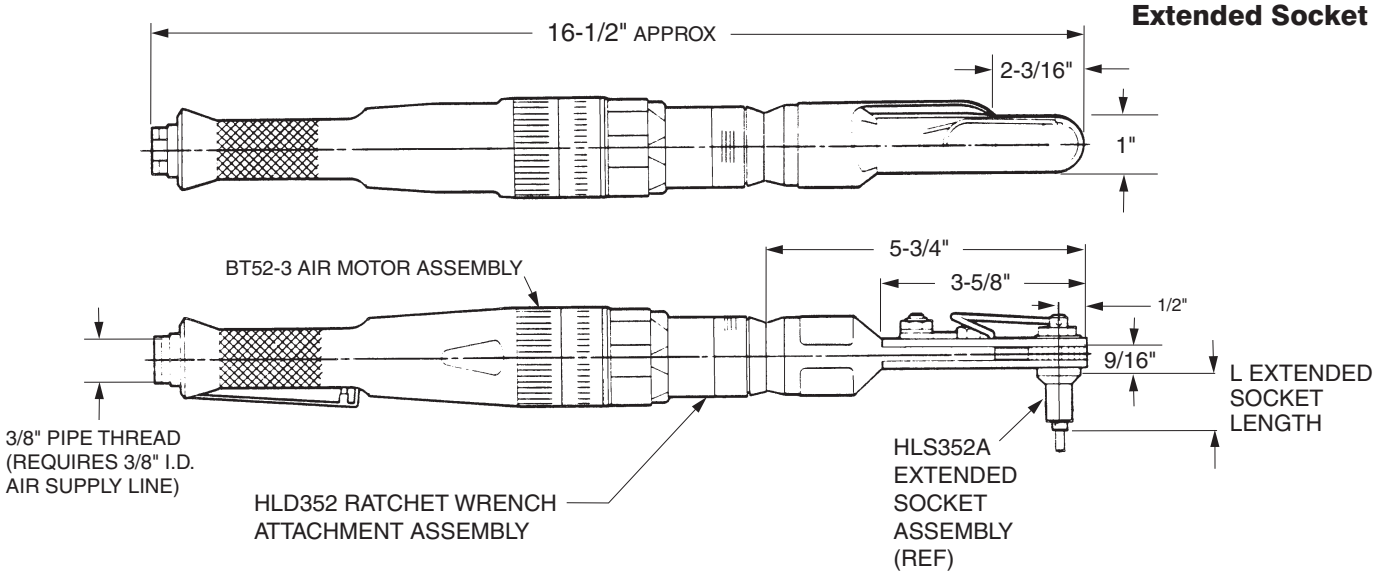


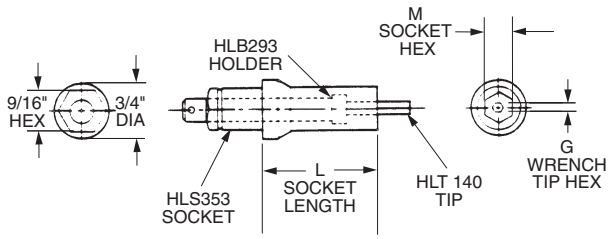


HLS352A EXTENDED SOCKET ASSY

DRIVER BASIC PART NO. | SOCKET HEX REF. TABLE 1 | SOCKET LENGTH (REF TABLE 2) | SUPER-KEY HEX REF. TABLE 1. | SUPER-KEY (T-SERIES)

**HLA3502 - 437 (C) - 156 T**

Example: complete driver assy. part no.

### ORDERING INFORMATION

1. Match pin and collar hexes with Super-Key Hex and Socket Hex.
2. See table 1 for corresponding complete driver assy part no.

### TECHNICAL DATA

| | | | |
|---|---|---|---|
| Operating Pressure | 90 PSIA | Horsepower Rating | 0.50 |
| **MAX. TORQUE RATING** (Motor) | 300 in. lb @90 PSIA | Air Consumption | 22 SCFM |
| Socket Speed | 250 RPM | Weight | 2 lb |

### TABLE 1

| COLLAR DRIVING HEX (Matches Socket Hex) | PIN RECESS HEX (Matches Super-Key Hex) | COMPLETE DRIVER ASSY. PART NO. | OFFSET ADAPTOR & SOCKET ASSY. PART NO. | EXTENDED SOCKET ASSY. PART NO. |
|---|---|---|---|---|
| 7/16 | 1/8 | HLA3502-437( )-125T | HLD352-437( )-125T | HLS352A-437( )-125T |
| 1/2 | | HLA3502-500( )-125T | HLD352-500( )-125T | HLS352A-500( )-125T |
| 9/16 | | HLA3502-562( )-125T | HLD352-562( )-125T | HLS352A-562( )-125T |
| 5/8 | | HLA3502-625( )-125T | HLD352-625( )-125T | HLS352A-625( )-125T |
| 11/16 | | HLA3502-687( )-125T | HLD352-687( )-125T | HLS352A-687( )-125T |
| 7/16 | 5/32 | HLA3502-437( )-156T | HLD352-437( )-156T | HLS352A-437( )-156T |
| 1/2 | | HLA3502-500( )-156T | HLD352-500( )-156T | HLS352A-500( )-156T |
| 9/16 | | HLA3502-562( )-156T | HLD352-562( )-156T | HLS352A-562( )-156T |
| 5/8 | | HLA3502-625( )-156T | HLD352-625( )-156T | HLS352A-625( )-156T |
| 11/16 | | HLA3502-687( )-156T | HLD352-687( )-156T | HLS352A-687( )-156T |

### TABLE 2

| | |
|---|---|
| A = 0.50 | E = 0.75 |
| B = 1.00 | F = 1.75 |
| C = 1.50 | X = 4.00 |
| D = 2.00 | |

# Hi-Lok Montagewerkzeuge
# HI-LOK INSTALLATION TOOLS

**HLS352A EXTENDED SOCKET ASSY.**

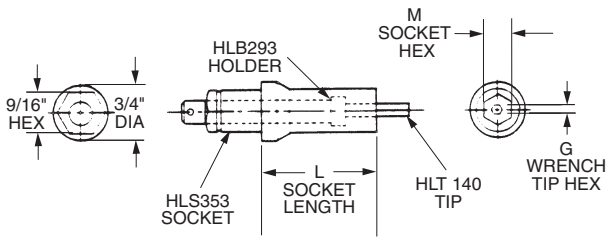


**TABLE 2 - SOCKET LENGTH**

| | |
|---|---|
| A = 0.50 | E = 0.75 |
| B = 1.00 | F = 1.75 |
| C = 1.50 | X = 4.00 |
| D = 2.00 | |

**INSTALLATION TOOLING**

# HLA3522

**Large 20° Offset Ratchet Wrench Tool Assembly with Extended Socket and Super-Key™ (T-Series)**

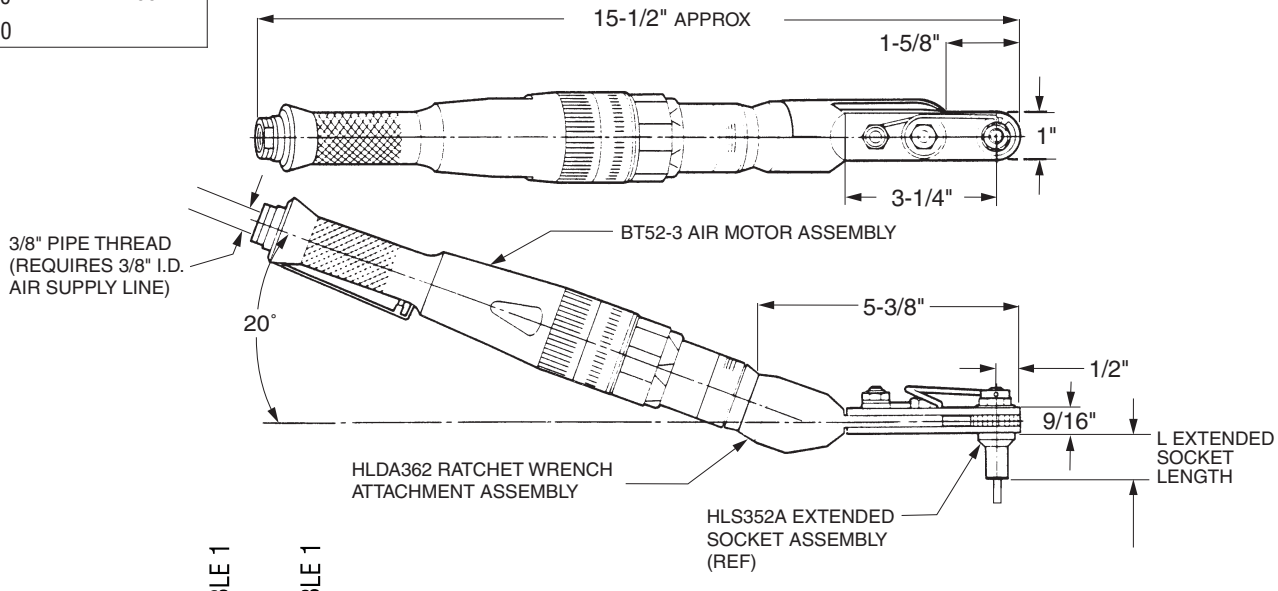


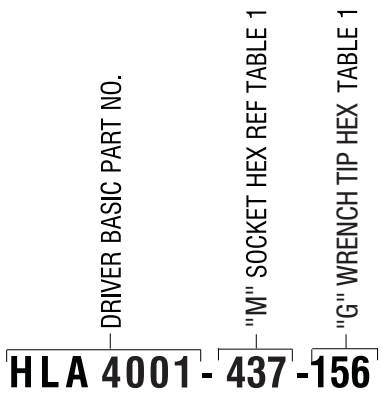


Example 1: complete driver assy. part no.

**ORDERING INFORMATION**

1. Determine collar driving hex dimensions of the fasteners to be installed.
2. See table 1 for "M" socket hex to match collar driving hex dimensions. Determine complete tool assembly part no. See example 1.
3. See table 2 for complete tool assembly part nos. to obtain an Offset Adaptor Assembly featuring a thru-hex socket, less finder pin and leaf spring.
4. See example 2.

**TECHNICAL DATA**

| | |
|---|---|
| Operating Pressure ..... 90 PSIA | Horsepower Rating ..... 0.50 |
| **MAX. TORQUE RATING** ..... 300 in. lb (Motor) @90 PSIA | Air Consumption ..... 22 SCFM |
| Socket Speed ..... 250 RPM | Weight ..... 2 lb |

**TABLE 1**

| "M" SOCKET HEX (Matches Collar Driving Hex) | COMPLETE TOOL ASSY. | RATCHET WRENCH ATTACHMENT ASSY. | EXTENDED SOCKET ASSY. |
|---|---|---|---|
| 7/16 | HLA3522-437( )-125T | HLDA362-437( )-125T | HLS352A-437( )-125T |
| 1/2 | HLA3522-500( )-125T | HLDA362-500( )-125T | HLS352A-500( )-125T |
| 9/16 | HLA3522-562( )-125T | HLDA362-562( )-125T | HLS352A-562( )-125T |
| 5/8 | HLA3522-625( )-125T | HLDA362-625( )-125T | HLS352A-625( )-125T |
| 11/16 | HLA3522-687( )-125T | HLDA362-687( )-125T | HLS352A-687( )-125T |
| 7/16 | HLA3522-437( )-156T | HLDA362-437( )-156T | HLS352A-437( )-156T |
| 1/2 | HLA3522-500( )-156T | HLDA362-500( )-156T | HLS352A-500( )-156T |
| 9/16 | HLA3522-562( )-156T | HLDA362-562( )-156T | HLS352A-562( )-156T |
| 5/8 | HLA3522-625( )-156T | HLDA362-625( )-156T | HLS352A-625( )-156T |
| 11/16 | HLA3522-687( )-156T | HLDA362-687( )-156T | HLS352A-687( )-156T |

# Hi-Lok Montagewerkzeuge
# HI-LOK INSTALLATION TOOLS

**INSTALLATION TOOLING**

## HLA4001

**Large Straight Heavy Duty Ratchet Wrench Tool Assembly with Flush Socket**

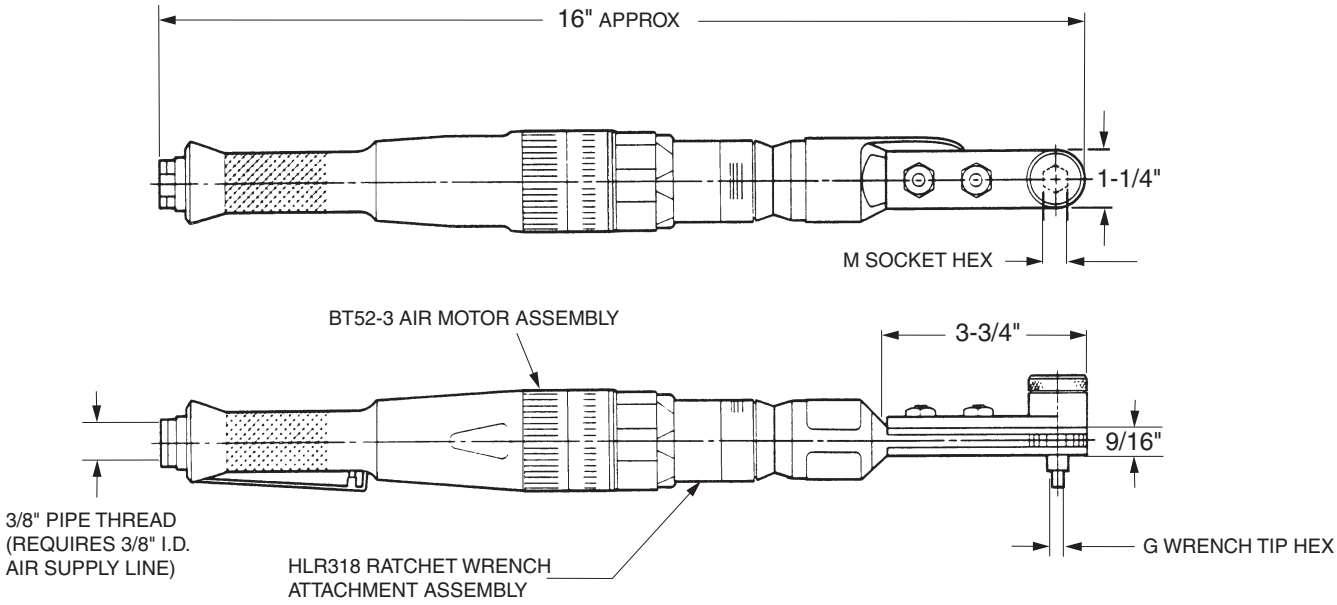


DRIVER BASIC PART NO. — "M" SOCKET HEX REF TABLE 1 — "G" WRENCH TIP HEX TABLE 1

**HLA 4001 - 437 -156**

Example 1: complete driver assy. part no.

**ORDERING INFORMATION**

1. Determine collar driving hex and pin recess hex dimensions of the fasteners to be installed.
2. See table 1 for "M" socket hex & "G" wrench tip combo to match collar and pin dimensions. Determine complete tool assembly part no.

**TECHNICAL DATA**

| | |
|---|---|
| Operating Pressure ..... 90 PSIA | Horsepower Rating ..... 0.65 |
| **MAX. TORQUE RATING** ..... 400 in. lb (Motor) @90 PSIA | Air Consumption ..... 30 CFM |
| Socket Speed ..... 170 RPM | Weight ..... 4.2 lb |

**TABLE 1**

| "M" SOCKET HEX (Matches Socket Hex) | "G" WRENCH TIP HEX (Matches Super-Key Hex) | COMPLETE TOOL ASSY. PART NO. | RATCHET WRENCH ATTACHMENT ASSY. PART NO. (REF) |
|---|---|---|---|
| 7/16 | 1/8 | HLA4001-437-125 | HLR318-437-125 |
| 1/2 | | HLA4001-500-125 | HLR318-500-125 |
| 9/16 | | HLA4001-562-125 | HLR318-562-125 |
| 5/8 | | HLA4001-625-125 | HLR318-625-125 |
| 11/16 | | HLA4001-687-125 | HLR318-687-125 |
| 7/16 | 5/32 | HLA4001-437-156 | HLR318-437-156 |
| 1/2 | | HLA4001-500-156 | HLR318-500-156 |
| 9/16 | | HLA4001-562-156 | HLR318-562-156 |
| 5/8 | | HLA4001-625-156 | HLR318-625-156 |
| 11/16 | | HLA4001-687-156 | HLR318-687-156 |
| 9/16 | 3/16 | HLA4001-562-187 | HLR318-562-187 |
| 3/4 | | HLA4001-750-187 | HLR318-750-187 |
| 11/16 | 7/32 | HLA4001-687-218 | HLR318-687-218 |

# Hi-Lok Montagewerkzeuge
# HI-LOK INSTALLATION TOOLS

**INSTALLATION TOOLING**

## HLA4007

**Large Straight Heavy Duty Ratchet Wrench Tool Assembly with "Quick Change" Extended Socket**

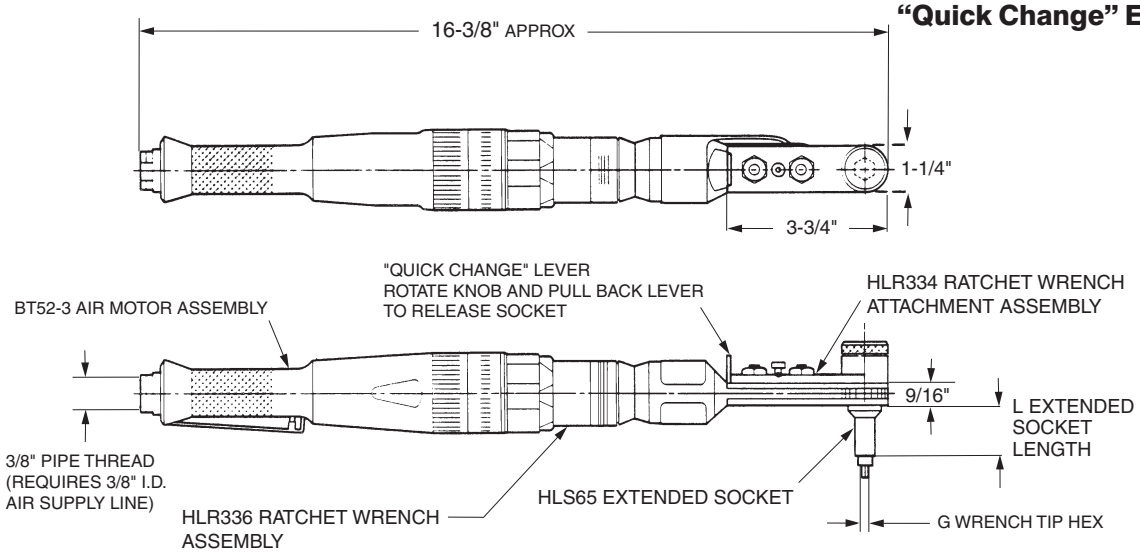


U.S. Patent 4,924,734

DRIVER BASIC PART NO. — "M" SOCKET HEX REF. TABLE 1 — "L" EXTENDED SOCKET LENGTH (REF TABLE 2) — "G" WRENCHTIP HEX REF. TABLE 1.

**HLA4007 - 437 (F) - 156**

Example: complete driver assy. part no.

### ORDERING INFORMATION

1. Determine collar driving hex and pin recess hex dimensions of the fasteners to be installed.
2. See table 1 for "M" socket hex & "G" wrench tip combo to match collar and pin dimensions. Determine complete tool assembly part no.
3. See table 2 for "L" extended socket length

**TABLE 2**

| | |
|---|---|
| A = 0.50 | E = 0.75 |
| B = 1.00 | F = 1.75 |
| C = 1.50 | X = 4.00 |
| D = 2.00 | |

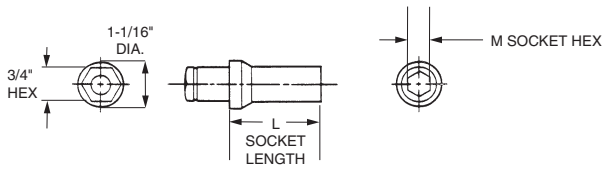


HLS65 EXTENDED SOCKET

### TECHNICAL DATA

Operating Pressure ..... 90 PSIA
**MAX. TORQUE RATING** ..... 400 in. lb @90 PSIA (Motor)
Socket Speed ..... 170 RPM
Horsepower Rating ..... 0.65
Air Consumption ..... 30 CFM
Weight ..... 4.2 lb

**TABLE 1**

| "M" SOCKET HEX (Matches Collar Driving Hex) | "G" WRENCH TIP HEX (Matches Pin Recess Hex) | COMPLETE TOOL ASSY. PART NO. | RATCHET WRENCH ATTACHMENT ASSY. PART NO. (REF.) | EXTENEDED SOCKET ASSY. PART NO. |
|---|---|---|---|---|
| 7/16 | 1/8 | HLA4007-437( )-125 | HLR336-437( )-125 | HLS65-437( ) |
| 1/2 | | HLA4007-500( )-125 | HLR336-500( )-125 | HLS65-500( ) |
| 9/16 | | HLA4007-562( )-125 | HLR336-562( )-125 | HLS65-562( ) |
| 5/8 | | HLA4007-625( )-125 | HLR336-625( )-125 | HLS65-625( ) |
| 11/16 | | HLA4007-687( )-125 | HLR336-687( )-125 | HLS65-687( ) |
| 7/16 | 5/32 | HLA4007-437( )-156 | HLR336-437( )-156 | HLS65-437( ) |
| 1/2 | | HLA4007-500( )-156 | HLR336-500( )-156 | HLS65-500( ) |
| 9/16 | | HLA4007-562( )-156 | HLR336-562( )-156 | HLS65-562( ) |
| 5/8 | | HLA4007-625( )-156 | HLR336-625( )-156 | HLS65-625( ) |
| 11/16 | | HLA4007-687( )-156 | HLR336-687( )-156 | HLS65-687( ) |
| 9/16 | 3/16 | HLA4007-562( )-187 | HLR336-562( )-187 | HLS65-562( ) |
| 3/4 | | HLA4007-750( )-187 | HLR336-750( )-187 | HLS65-750( ) |
| 11/16 | 7/32 | HLA4007-687( )-218 | HLR336-687( )-218 | HLS65-687( ) |

# Hi-Lok Montagewerkzeuge
# HI-LOK INSTALLATION TOOLS

INSTALLATION TOOLING

## HLA4008

**Large 20° Offset Heavy Duty Ratchet Wrench Tool Assembly with "Quick Change" Extended Socket**

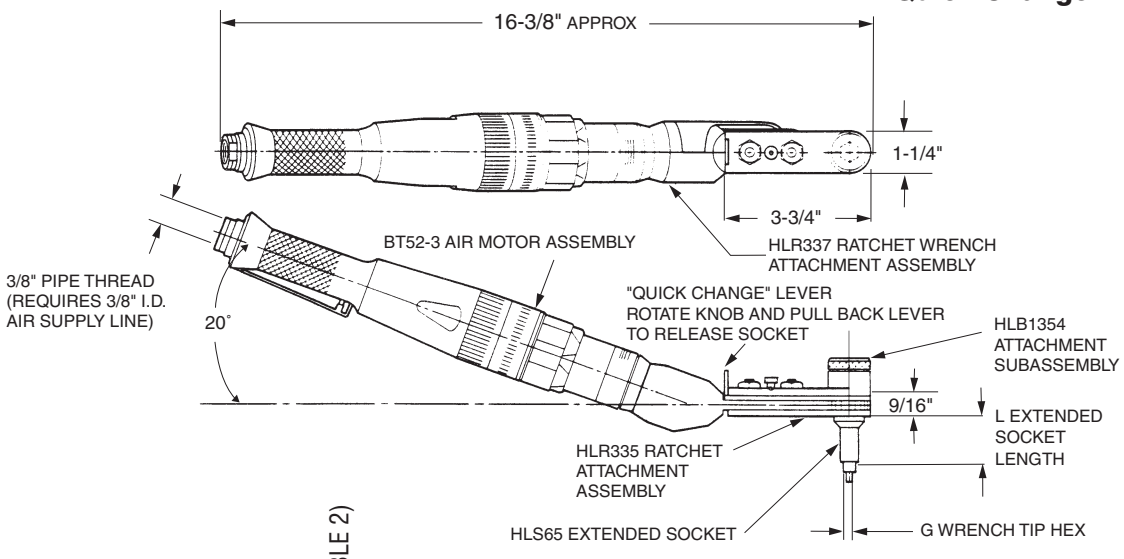


U.S. Patent 4,924,734

DRIVER BASIC PART NO. | "M" SOCKET HEX REF. TABLE 1 | "L" EXTENDED SOCKET LENGTH (REF TABLE 2) | "G" WRENCH TIP HEX REF. TABLE 1.

**HLA4008 - 500 (E) - 156**

Example: complete driver assy. part no.

### ORDERING INFORMATION

1. Determine collar driving hex and pin recess hex dimensions of the fasteners to be installed.
2. See table 1 for "M" socket hex & "G" wrench tip combo to match collar and pin dimensions. Determine complete tool assembly part no.
3. See table 2 for "L" extended socket length

**TABLE 2**

| | |
|---|---|
| A = 0.50 | E = 0.75 |
| B = 1.00 | F = 1.75 |
| C = 1.50 | X = 4.00 |
| D = 2.00 | |

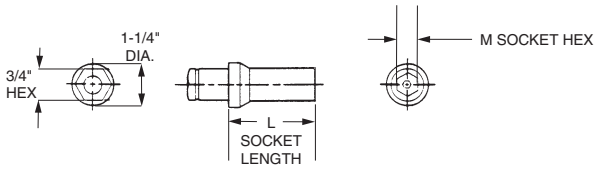


HLS65 EXTENDED SOCKET

**TECHNICAL DATA**

| | | | |
|---|---|---|---|
| Operating Pressure | 90 PSIA | Horsepower Rating | 0.65 |
| **MAX. TORQUE RATING** (Motor) | 400 in. lb @90 PSIA | Air Consumption | 30 CFM |
| Socket Speed | 170 RPM | Weight | 4.2 lb |

**TABLE 1**

| "M" SOCKET HEX (Matches Collar Driving Hex) | "G" WRENCH TIP HEX (Matches Pin Recess Hex) | COMPLETE TOOL ASSY. PART NO. | RATCHET WRENCH ATTACHMENT ASSY. PART NO. (REF.) | EXTENEDED SOCKET ASSY. PART NO. |
|---|---|---|---|---|
| 7/16 | 1/8 | HLA4008-437( )-125 | HLR337-437( )-125 | HLS65-437( ) |
| 1/2 | | HLA4008-500( )-125 | HLR337-500( )-125 | HLS65-500( ) |
| 9/16 | | HLA4008-562( )-125 | HLR337-562( )-125 | HLS65-562( ) |
| 5/8 | | HLA4008-625( )-125 | HLR337-625( )-125 | HLS65-625( ) |
| 11/16 | | HLA4008-687( )-125 | HLR337-687( )-125 | HLS65-687( ) |
| 7/16 | 5/32 | HLA4008-437( )-156 | HLR337-437( )-156 | HLS65-437( ) |
| 1/2 | | HLA4008-500( )-156 | HLR337-500( )-156 | HLS65-500( ) |
| 9/16 | | HLA4008-562( )-156 | HLR337-562( )-156 | HLS65-562( ) |
| 5/8 | | HLA4008-625( )-156 | HLR337-625( )-156 | HLS65-625( ) |
| 11/16 | | HLA4008-687( )-156 | HLR337-687( )-156 | HLS65-687( ) |
| 9/16 | 3/16 | HLA4008-562( )-187 | HLR337-562( )-187 | HLS65-562( ) |
| 3/4 | | HLA4008-750( )-187 | HLR337-750( )-187 | HLS65-750( ) |
| 11/16 | 7/32 | HLA4008-687( )-218 | HLR337-687( )-218 | HLS65-687( ) |

# Hi-Lok Montagewerkzeuge
# HI-LOK INSTALLATION TOOLS

**INSTALLATION TOOLING**

## HLA4020

**Large 20° Offset Heavy Duty Ratchet Wrench Tool Assembly with Flush Socket**

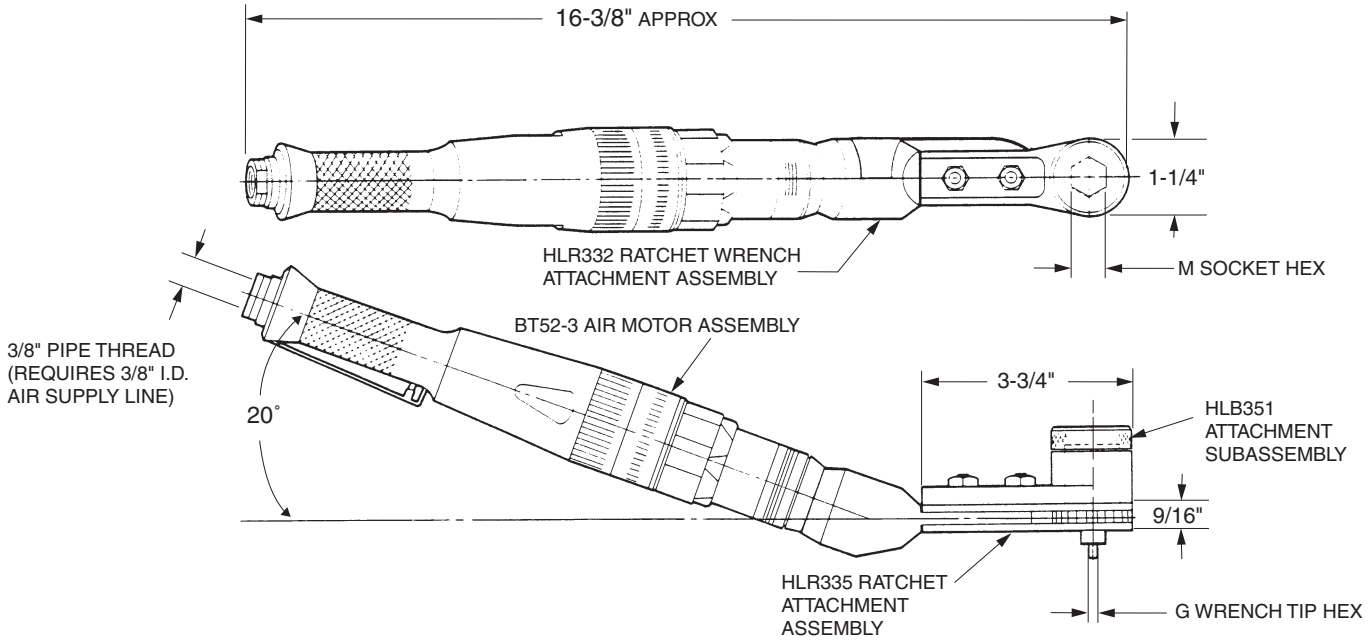


**TECHNICAL DATA**

| | | | |
|---|---|---|---|
| Operating Pressure | 90 PSIA | Horsepower Rating | 0.65 |
| **MAX. TORQUE RATING** (Motor) | 400 in. lb @90 PSIA | Air Consumption | 30 CFM |
| Socket Speed | 170 RPM | Weight | 4.2 lb |

**TABLE 1**

| "M" SOCKET HEX (Matches Socket Hex) | "G" WRENCH HEX (Matches Super-Key Hex) | COMPLETE TOOL ASSY. PART NO. | OFFSET ADAPTOR & SOCKET ASSY. PART NO. | EXTENDED SOCKET ASSY. PART NO. (REF.) | RATCHET ATTACHMENT ASSY. PART NO. (REF.) |
|---|---|---|---|---|---|
| 7/16 | 1/8 | HLA4020-437-125 | HLR332-437-125 | HLB351-437-125 | HLR335-437 |
| 1/2 | | HLA4020-500-125 | HLR332-500-125 | HLB351-500-125 | HLR335-500 |
| 9/16 | | HLA4020-562-125 | HLR332-562-125 | HLB351-562-125 | HLR335-562 |
| 5/8 | | HLA4020-625-125 | HLR332-625-125 | HLB351-625-125 | HLR335-625 |
| 11/16 | | HLA4020-687-125 | HLR332-687-125 | HLB351-687-125 | HLR335-687 |
| 7/16 | 5/32 | HLA4020-437-156 | HLR332-437-156 | HLB351-437-156 | HLR335-437 |
| 1/2 | | HLA4020-500-156 | HLR332-500-156 | HLB351-500-156 | HLR335-500 |
| 9/16 | | HLA4020-562-156 | HLR332-562-156 | HLB351-562-156 | HLR335-562 |
| 5/8 | | HLA4020-625-156 | HLR332-625-156 | HLB351-625-156 | HLR335-625 |
| 11/16 | | HLA4020-687-156 | HLR332-687-156 | HLB351-687-156 | HLR335-687 |
| 9/16 | 3/16 | HLA4020-562-187 | HLR332-562-187 | HLB351-562-187 | HLR335-562 |
| 3/4 | | HLA4020-750-187 | HLR332-750-187 | HLB351-750-187 | HLR335-750 |
| 11/16 | 7/32 | HLA4020-687-218 | HLR332-687-218 | HLB351-687-218 | HLR335-687 |

DRIVER BASIC PART NO. — "M" SOCKET HEX REF. TABLE 1 — "G" WRENCHTIP HEX REF. TABLE 1.

**HLA4020 - 437 - 156**

Example: complete driver assy. part no.

### ORDERING INFORMATION

1. Determine collar driving hex and pin recess hex dimensions of the fasteners to be installed.
2. See table 1 for "M" socket hex & "G" wrench tip combo to match collar and pin dimensions. Determine complete tool assembly part no.

# Hi-Lok Montagewerkzeuge
# HI-LOK INSTALLATION TOOLS

**INSTALLATION TOOLING**

## HLA7000

**Large Straight Heavy Duty Ratchet Wrench Tool Assembly with Flush Socket**

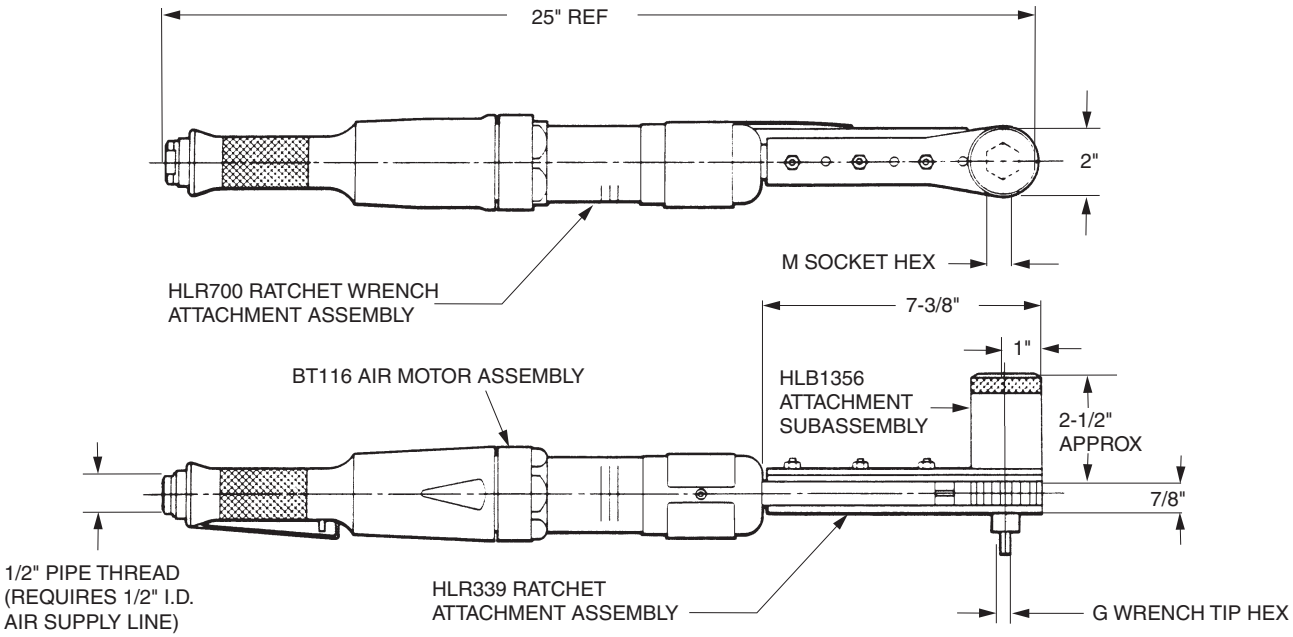


DRIVER BASIC PART NO. — "M" SOCKET HEX REF. TABLE 1 — "G" WRENCH TIP HEX REF. TABLE 1

**HLA7000 - 625 - 156**

Example: complete driver assy. part no.

### ORDERING INFORMATION

1. Determine collar driving hex and pin recess hex dimensions of the fasteners to be installed.
2. See table 1 for "M" socket hex & "G" wrench tip combo to match collar and pin dimensions. Determine complete tool assembly part no.

### TECHNICAL DATA

| | | | |
|---|---|---|---|
| Operating Pressure | 90 PSIA | Horsepower Rating | 2.70 |
| **MAX. TORQUE RATING** (Motor) | 185 ft. lb @90 PSIA | Air Consumption | 55 CFM |
| Socket Speed | 75 RPM | Weight | 15 lb |

### TABLE 1

| "M" SOCKET HEX (Matches Collar Driving Hex) | "G" WRENCH TIP HEX (Matches Pin Recess Hex) | COMPLETE TOOL ASSY. PART NO. | RATCHET WRENCH ATTACHMENT ASSY. PART NO. (REF.) | ATTACHMENT SUB-ASSY. PART NO. (REF.) |
|---|---|---|---|---|
| 1/2 | 5/32 | HLA7000-500-156 | HLR700-500-156 | HLB1356-500-156 |
| 5/8 | | HLA7000-625-156 | HLR700-625-156 | HLB1356-625-156 |
| 3/4 | 3/16 | HLA7000-750-187 | HLR700-750-187 | HLB1356-750-187 |
| 7/8 | 7/32 | HLA7000-875-218 | HLR700-875-218 | HLB1356-875-218 |
| 1 | 1/4 | HLA7000-1000-250 | HLR700-1000-250 | HLB1356-1000-250 |
| 1-1/8 | 5/16 | HLA7000-1125-312 | HLR700-1125-312 | HLB1356-1125-312 |

# Hi-Lok Montagewerkzeuge
# HI-LOK INSTALLATION TOOLS

**INSTALLATION TOOLING**

## HLA7020

**Large Straight Heavy Duty Ratchet Wrench Tool Assembly with Extended Socket**

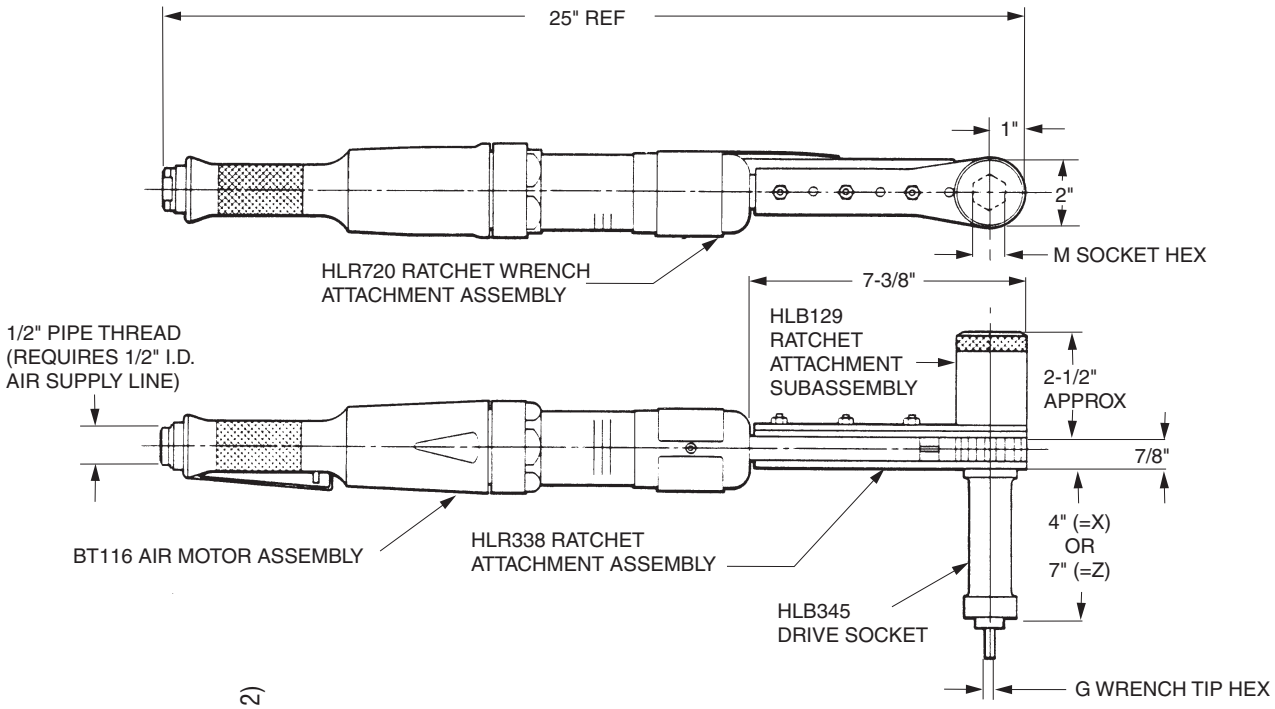


DRIVER BASIC PART NO. | "M" SOCKET HEX REF. TABLE 1 | EXTENDED SOCKET LENGTH (REF TABLE 2) | "G" WRENCH TIP HEX REF. TABLE 1

**HLA7020 - 625 (X) - 156**

Example: complete driver assy. part no.

### ORDERING INFORMATION

1. Determine collar driving hex and pin recess hex dimensions of the fasteners to be installed.
2. See table 1 for "M" socket hex & "G" wrench tip combo to match collar and pin dimensions. Determine complete tool assembly part no.
3. See table 2 for "L" extended socket length

### TECHNICAL DATA

| | | | |
|---|---|---|---|
| Operating Pressure | 90 PSIA | Horsepower Rating | 2.70 |
| **MAX. TORQUE RATING** (Motor) | 185 ft. lb @90 PSIA | Air Consumption | 55 CFM |
| Socket Speed | 75 RPM | Weight | 15 lb |

### TABLE 1

| "M" SOCKET DRIVING HEX (Matches Socket Hex) | "G" WRENCH RECESS HEX (Matches Super-Key Hex) | COMPLETE TOOL ASSY. PART NO. | RATCHET WRENCH ATTACHMENT ASSY. PPART NO. (REF.) | EXTENDED SOCKET PART NO. | ATTACHMENT ASSY. PART NO. (REF.) | SOCKET LENGTH inches |
|---|---|---|---|---|---|---|
| 1/2 | 5/32 | HLA7020-500X-156 | HLR720-500X-156 | HLB345-500X | HLB129-500X-156 | |
| 5/8 | | HLA7020-625X-156 | HLR720-625X-156 | HLB345-625X | HLB129-625X-156 | |
| 9/16 | 3/16 | HLA7020-562X-187 | HLR720-562X-187 | HLB345-562X | HLB129-562X-187 | |
| 3/4 | | HLA7020-750X-187 | HLR720-750X-187 | HLB345-750X | HLB129-750X-187 | 4 |
| 11/16 | 7/32 | HLA7020-687X-218 | HLR720-687X-218 | HLB345-687X | HLB129-687X-218 | |
| 7/8 | | HLA7020-875X-218 | HLR720-875X-218 | HLB345-875X | HLB129-875X-218 | |
| 7/8 | 1/4 | HLA7020-875X-250 | HLR720-875X-250 | HLB345-875X | HLB129-875X-250 | |
| 1/2 | 5/32 | HLA7020-500Z-156 | HLR720-500Z-156 | HLB345-500Z | HLB129-500Z-156 | |
| 3/4 | 3/16 | HLA7020-750Z-187 | HLR720-750Z-187 | HLB345-750Z | HLB129-750Z-187 | |
| 7/8 | 7/32 | HLA7020-875Z-218 | HLR720-875Z-218 | HLB345-875Z | HLB129-875Z-218 | |
| 7/8 | 1/4 | HLA7020-875Z-250 | HLR720-875Z-250 | HLB345-875Z | HLB129-875Z-250 | 7 |
| 1.0 | | HLA7020-1000Z-250 | HLR720-1000Z-250 | HLB345-1000Z | HLB129-1000Z-250 | |
| 1-1/8 | 5/16 | HLA7020-1125Z-312 | HLR720-1125Z-312 | HLB345-1125Z | HLB129-1125Z-312 | |

# Hi-Lok Montagewerkzeuge
# HI-LOK INSTALLATION TOOLS

**INSTALLATION TOOLING**

## HLA1008

**Automatic Feed Driver Assembly**

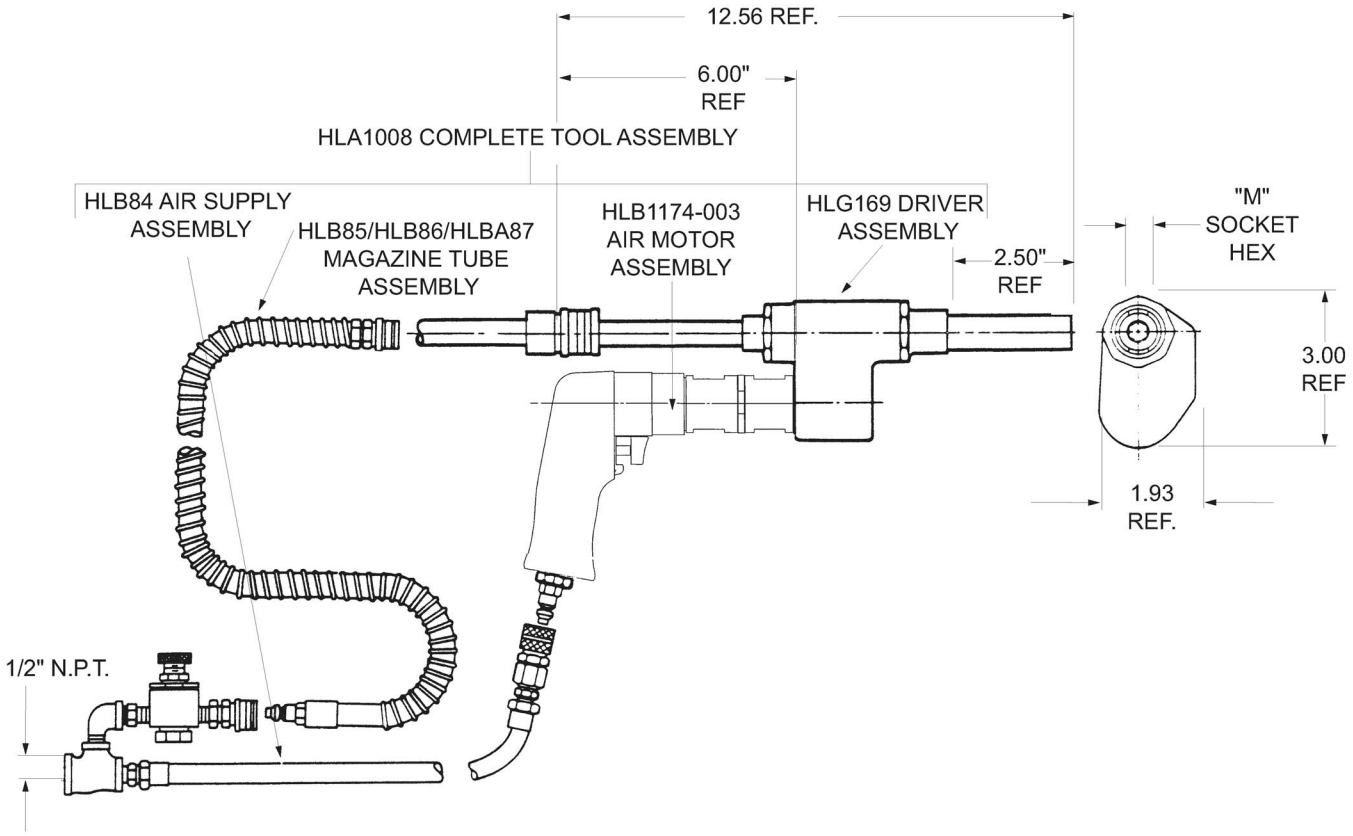


BASIC PART NO. — "M" SOCKET HEX (REF TABLE 1)

**HLA1008-312**

Example 1: complete tool assy. part no.

### ORDERING INFORMATION

1. Determine collar driving hex of the fasteners to be installed.
2. See table 1 for "M" socket hex to match collar driving hex dimensions. Determine complete tool assembly part number.

### TECHNICAL DATA

| | |
|---|---|
| Operating Pressure ..... 90 PSIA | Horsepower Rating ..... 0.75 |
| **MAX. TORQUE RATING** ..... 270 in. lb (Motor) @90 PSIA | Air Consumption ..... 25 CFM |
| Socket Speed .....312 RPM | Weight ..... 3 lb |

### TABLE 1

| "M" SOCKET HEX (Matches Collar Driving Hex) | COMPLETE TOOL ASSEMBLY Part No. | RATCHET WRENCH ATTACHMENT ASSY. Part No. (Ref.) |
|---|---|---|
| 5/16 | HLA1008-312 | HLG171-312 |
| 11/32 | HLA1008-343 | HLG171-343 |
| 7/16 | HLA1008-437 | HLG171-437 |

# INSTALLATION SYSTEMS FOR AEROSPACE BLIND RIVETS AND LOCKBOLTS

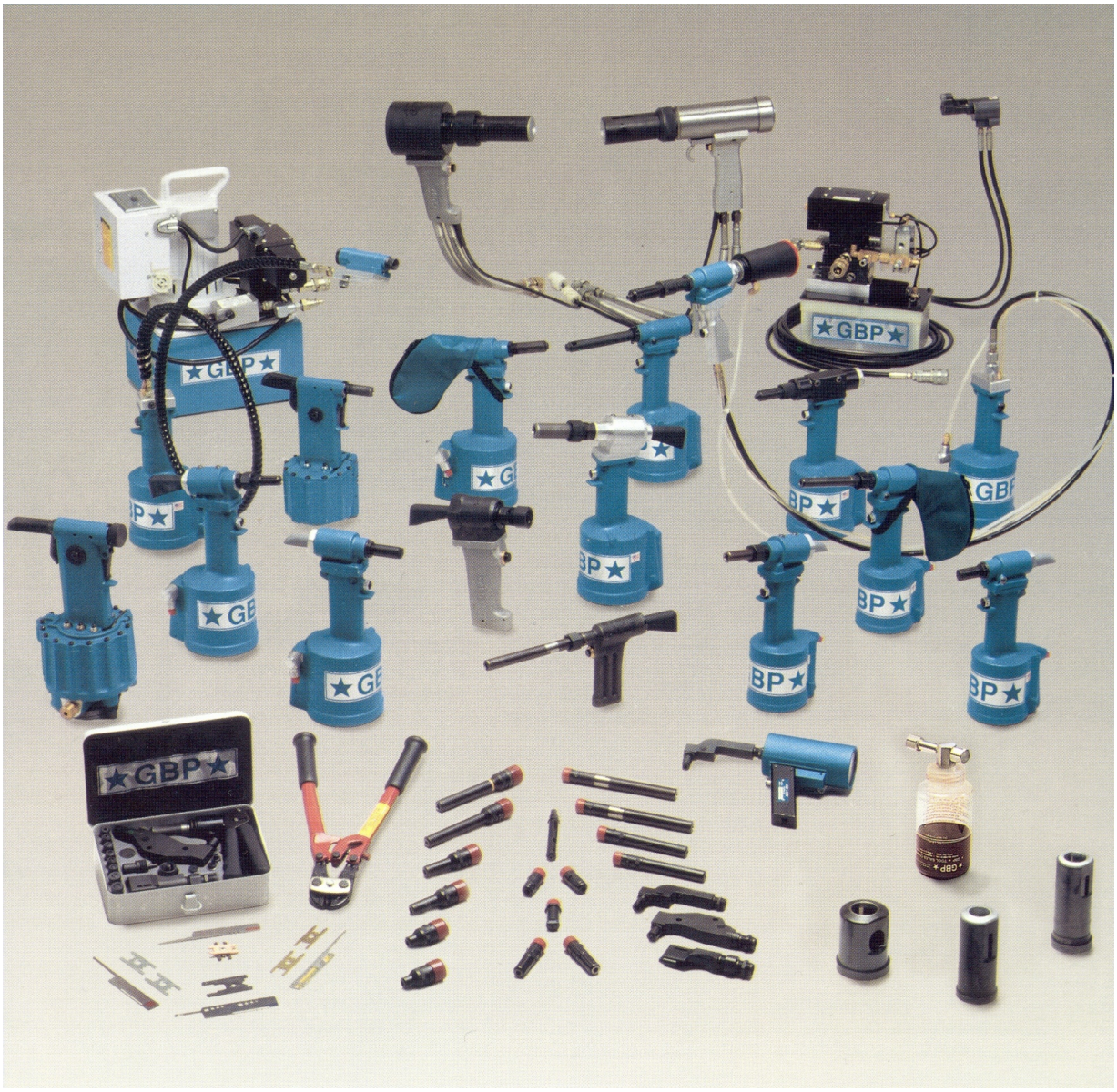


Auf den nachfolgenden Seiten können wir leider nicht alle lieferbaren Werkzeuge für die Verarbeitung von Blindnieten & Lockbolts darstellen.
Weitere Informationen, oder Datenblätter erhalten Sie auf Anfrage.

On the following pages we can not show all available tools for the installation of Blind Fasteners & Lockbolts.
Please contact us if you need more informations or data sheets.

| Split-Riveter<br>Split-Handle-Riveter<br>Riveter Kits | Nietwerkzeuge<br>RIVET TOOLING |
|---|---|



GBP745B/204



GBP703BSR



GBP734SHV



GBP704RK-1



GBP722TCK



GBP585MFK



GBP713BBK-1



GBP731NASK-1



GBP713BBK-1



GBP745-568NAS-1



GBP731LGPK-1

Weitere Informationen über lieferbare Split-Nietgeräte und Nietgerät-Werkzeugsätze erhalten Sie auf Anfrage

Please contact us if you need more informations of Split-Riveter & Riveter-Kits

| Zubehör / ACCESSORIES | **Nietwerkzeuge / RIVET TOOLING** |
|---|---|

## Klemmlängen-Lehren / GRIP GAGES



**269C3**

Empfohlen für / recommend for:

**CherryMax® & CherryLock®**



**GBP 105093**

Seite 1 / SIDE 1 (schwarz / black):
- NAS Tension Lockbolts
- MS21140 & MS21141 Blind Fasteners
- MS90353 & MS90354 Blind Fasteners

Seite 2 / SIDE 2 (rot / red):
- NAS Shear, GP®, LGP® Lockbolts
- NAS1919 & NAS1921 Blind Fasteners
- MS20600/MS20601 & MS20604/MS20605 Blind Fasteners
- CHERRYMAX® (M7885) Blindniete / Blind Fasteners
- CHERRYLOCK® (NAS1398/NAS1399 & NAS1738/NAS1739) Blind Fasteners
- NAS1398A/NAS1399A & NAS1738A/NAS1739A 'A' Code Blind Fasteners

## Steckschlüssel mit 1/4"-Vierkant-Antrieb für ASP® Blindniete
## DRIVER WITH 1/4" SQUARE-DRIVER FOR ASP® FASTENER



| Nietdurchmesser<br>RIVET DIAMETER | Artikel Nr.<br>PART NO. |
|---|---|
| 11/64 | ASP05 |
| 13/64 | ASP06 |
| 17/64 | ASP08 |
| 21/64 | ASP10 |

## Einstell-/Prüflehre / SHIFT SETTING GAGE



Cherry® **680A159** Gage Bilt **784159**

Empfohlen für / recommend for:

**CherryLock® Installation Tool**
**G784 & GBP784B**

## Lehrdorne / RIVET HOLE SIZE GAGES "GO/NO-GO"



Empfohlen für / recommend for:
**CherryMax® & CherryLock®**

| **CHERRYMAX®** | | | **CHERRYLOCK®** | | |
|---|---|---|---|---|---|
| Nietdurchmesser<br>RIVET DIAMETER | Artikel Nr.<br>PART NO. | Artikel Nr.<br>PART NO. | Nietdurchmesser<br>RIVET DIAMETER | Artikel Nr.<br>PART NO. | Artikel Nr.<br>PART NO. |
| | **Nominal** | **Oversize** | | **Standard** | **Bulbed** |
| 3/32" (2,4 mm) | --- | --- | 3/32" (2,4 mm) | T172-3 | --- |
| 1/8" (3,2 mm) | T172-4 | T172-400 | 1/8" (3,2 mm) | T172-4 | T172-400 |
| 5/32" (4,0 mm) | T172-5 | T172-500 | 5/32" (4,0 mm) | T172-5 | T172-500 |
| 3/16" (4,8 mm) | T172-6 | T172-600 | 3/16" (4,8 mm) | T172-6 | T172-600 |
| 1/4" (6,4 mm) | T172-8 | T172-800 | 1/4" (6,4 mm) | T172-8 | --- |

## Entlüfter für pneum./hydr. Nietgeräte
## AIR BLEEDER FOR PNEUM./HYDR. RIVETERS



Cherry® **700A77**



Gage Bilt **704153**

## Stiftauffangbeutel
## STEM CATCHER BAG



Cherry® **670A20**



Gage Bilt **704214**

# Cherry Hand-Nietgeräte / **CHERRY HAND-RIVETER**

## CherryMAX

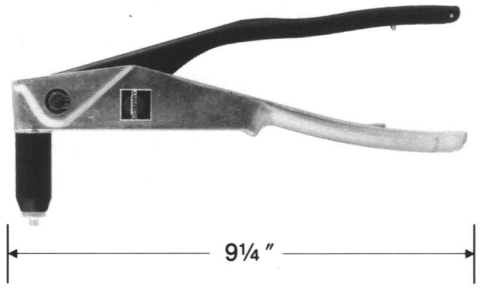


**G 27**

| | | |
|---|---|---|
| Gewicht / **WEIGHT** | 13 oz. | (0,37 kg) |
| max. Nietdurchmesser / **MAX. RIVET DIAMETER** | 1/8" | (3,2 mm) |
| Länge / **LENGTH** | 9.25" | (235 mm) |

Das Gerät wird mit einem Mundstück **(728A9-4)** für 3,2 mm Niete geliefert.

THE RIVETER COMES EQUIPPED WITH A NOSE PIECE **(728A9-4)** FOR 1/8" RIVETS.

## Nutplate Rivets

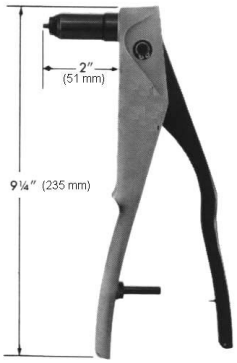


**G 29**

| | | |
|---|---|---|
| Gewicht / **WEIGHT** | 13 oz. | (0,37 kg) |
| max. Nietdurchmesser / **MAX. RIVET DIAMETER** | 1/8" | (3,2 mm) |
| Länge / **LENGTH** | 9.25" | (235 mm) |

Das Gerät wird mit je einem Mundstück für 2,4 mm **(728A9-3)** und 3,2 mm **(728A9-104)** Niete geliefert.

THE RIVETER COMES WITH 2 NOSE PIECES FOR 3/32" **(728A9-3)** AND 1/8" **(728A9-104)** RIVETS.

## CherryLOCK "A"

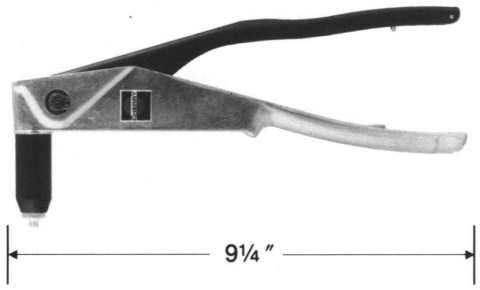


**G 30**

| | | |
|---|---|---|
| Gewicht / **WEIGHT** | 13 oz. | (0,37 kg) |
| max. Nietdurchmesser / **MAX. RIVET DIAMETER** | 1/8" | (3,2 mm) |
| Länge / **LENGTH** | 9.25" | (235 mm) |

Das Gerät wird mit einem Mundstück für 2,4 mm **(728-33)** Niete geliefert.

THE RIVETER COMES EQUIPPED WITH A NOSE PIECE **(728-33)** FOR 3/32" RIVETS.

## Akku-Blindnietgerät
## CORDLESS BLIND RIVETER




**PT-4500 / PT-4500H**

**18VDC Li-Ion Battery mit Ladeanzeige** / WITH FUEL GAGE

**Ladegerät verfügbar in 120V oder 220V** / CHARGER AVAILABLE IN 120V OR 220V

**Pulling Force:**
**4496 lbs. (19,99 kN)**

**Stroke:**
**.984" (25 mm)**

**Dimensions:**
11.5"H x 12"L x 3.25"W
292.1mm x 304.8mm x 82.55mm

**Power Source:**
18 VDC, 2.1 Ah, **Li-Ion**

**Charger Source:**
120 volt, 60 Hz
or 220 volt, 50 Hz

**Charger Cycle Time:**
40 min. (40 Minuten)

**Operating Temp. Range (ambient):**
-23°F to 131°F (-5°C to 55°C)

### PT-4500

**Typical Fasteners Installed with the PT-4500:**

- CherryMax & Blind Bolts

### PT-4500H

**Standardaufnahme für HUCK Zugköpfe der Serie 352**
CONFIGURATION FOR HUCK 352 STYLE PULLING HEADS

**Typical Fasteners Installed with the PT-4500H:**

- NAS & GP Lockbolts
- MS Blind Bolts
- LGLP & MLGP Lockbolts



**NAS & GP Lockbolts**



**MS Blind Bolts**



**LGLP & MLGP Lockbolts**

## PT-4500 (optional) Configurations

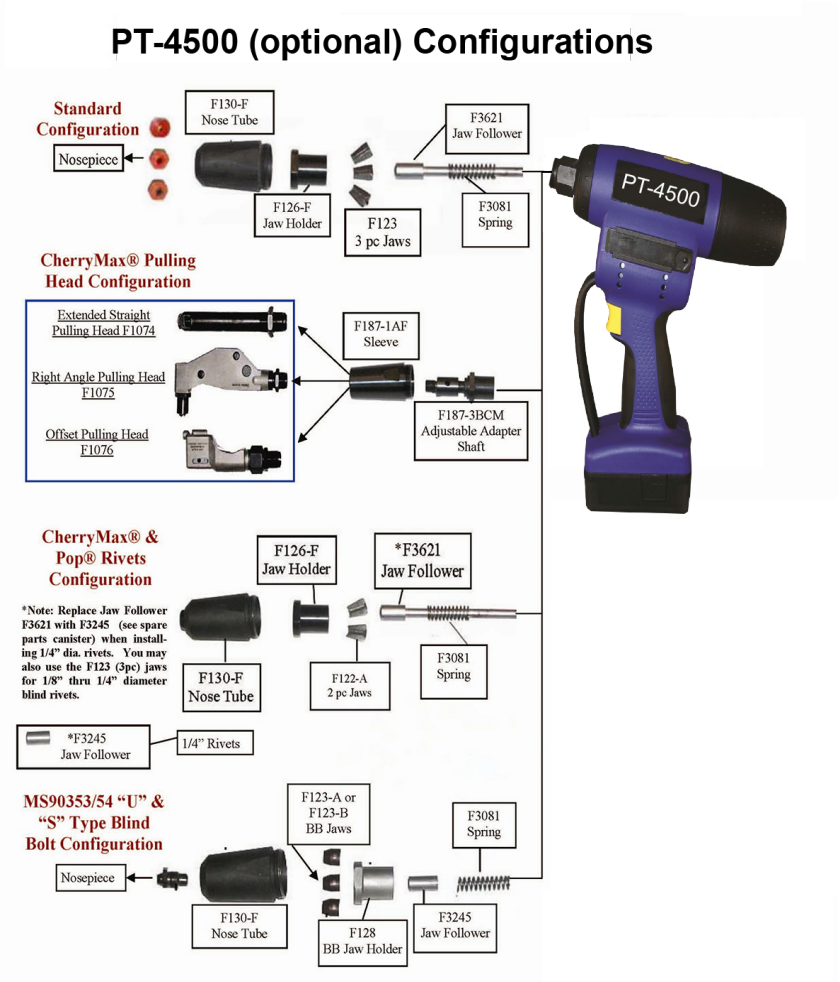


### Niettypen / Fasteners

**Blind.Rivets**
Capacity: max. 1/4"

**CherryMax® (M7885)**
Avdel® Monobolt
Cherry Monobolts®
Cherry Interlock®
Huck MagnaLok®
and
Pop type rivets

**Blind Bolts ***
Capacity: max. 3/16"

**MS90353S & U**
**MS90354S & U**

* Besondere Zubehörteile, wie Spannbacken, Spanbackengehäuse, Mundstücke, Führungshülsen usw. sind ggf. erforderlich.

* Special Pulling Head parts as jaws, jaw holder, nosepieces or followers are necessary.

# Commercial & Aerospace Blind Rivets

## Akku-Blindnietgeräte Sätze CORDLESS BLIND RIVETER KITS




**PT-4000-MIL-1**

**Inhalt / Contents**

| Qty | Part No. | Description |
|---|---|---|
| 1 | PT-4000 | Blind Cordless Riveter |
| 1 | F-3000 | Battery Charger |
| 2 | F-3001 | 12 V Battery Pack |
| 1 | F187-1A * | Adapter Sleeve(Flats) |
| 1 | F187-2A * | Adapter Puller Shaft |
| 1 | F687-1A | Adapter Sleeve, Olympic Lok |
| 1 | F687-2A | Adapter Shaft, Olympic Lok |
| 1 | F143 | Nosepiece, 5/32-3/16 CherryMax |
| 1 | F142 | Nosepiece, 1/4 CherryMax |
| 1 | F169 | Nosepiece, 1/4 Monobolt |
| 1 | F505-MB | 5/32 Maxibolt Nose (Shift Cap) |
| 1 | F506-MB | 3/16 Maxibolt Nose (Shift Cap) |
| 1 | F505 5/32 | MS 90353/54-S/U, BB |
| 1 | F506 3/16 | MS 90353/54-S/U, BB |
| 1 | F123-A | Jaw Set, 3 pc, 5/32 Blind Bolt |
| 1 | F123-B | Jaw Set, 3 pc, 3/16 Blind Bolt |
| 1 | F128 | Jaw Holder, Blind Bolts |
| 1 | F3245 | Jaw Follower, Blind Bolts/CM |
| 1 | F3123 | Jaw Set, 3 pc, Cherry Max |
| 1 | F702 | Spare Parts Canister |
| 1 | F3602 | Metal Carrying Case |

***F187-1A and F187-2A sold as an assembly F187**

**Note: Replacement jaws for riveter, 2pc - F122-A**




**PT-4000-MIL-2**

**Inhalt / Contents**

| Qty | Part No. | Description |
|---|---|---|
| 1 | PT-4000 | Cordless Riveter |
| 1 | F-3000 | Battery Charger |
| 2 | F-3001 | 12V Battery Pack |
| 1 | F187-1AF | Adapter Sleeve (Flats) |
| 1 | F187-2BCM | Adapter Shaft Assembly-CherryMax |
| 1 | F687-1A | Adapter Sleeve, Olympic Lok |
| 1 | F687-2A | Adapter Shaft, Olympic Lok |
| 1 | F3123 | Jaws (Set) Alum. CherryMax |
| 1 | F3245 | Jaw Follower, Blind Bolts & 1/4 CM |
| 1 | F142 | Nosepiece, 1/4" CherryMax/Interlock |
| 1 | F169 | Nosepiece, 1/4" Monobolt |
| 1 | F143 | Nosepiece, 5/32-3/16 CherryMax |
| 1 | F505 | Nosepiece, 5/32 MS90353/54-S/U, B |
| 1 | F506 | Nosepiece, 3/16 MS 90353/54-S/U, BB |
| 1 | F505-MB | Nosepiece, 5/32 Maxibolt |
| 1 | F506-MB | Nosepiece, 3/16 Maxibolt |
| 1 | F123-A | Jaws Set, 3 pc, 5/32 Blind Bolt |
| 1 | F123-B | Jaws Set, 3 pc, 3/16 Blind Bolt |
| 1 | F128 | Jaw Holder, Blind Bolts |
| 1 | F1074 | Ex. Straight Hd, CherryMax |
| 1 | F1075 | Rt. Angle Hd, CherryMax |
| 1 | F1076 | Offset Hd, CherryMax |
| 1 | F702 | Spare Parts Canister |
| 1 | F3602 | Metal Carrying Case |

**NOTE: Replacement jaws for riveter, 2pc - F122-A (5120-01-430-5378).**

# Commercial & Aerospace Blind Rivets & Blind Nuts

## Blindnietgeräte Satz BLIND RIVETER KIT




The **D-9000-MIL-1 Kit** contains the pull-up studs and driving anvils used in conjunction with the hand hydraulic D-700-VM combination riveter/nutsetter, which allows installation of blind nuts (NAS1329/30 MS27130/31) and AVK, TSN® and Nutsert® style inserts. The D-700-VM provides 4,800lbs of pulling force and because of its unique two-stage valve system, wrist effort is reduced as the pull force increases. The D-700-VM VariMax® feature also allows the pull force to be adjusted when installing Rivnuts®. This minimizes the chance of thread failure from excessive pull force or improper installation due to inadequate upset loads.

A blind nut stroke gage and blind rivet grip gage are also included to help insure proper fastener selection and installation. The kit is housed in a weather tight metal
box and comes with a built in fastener and tooling selection chart permanently affixed to the inside lid. Operating instructions are provided in both a written manual and CD-ROM format to help insure proper care and use.

**For Rivet Type:**

- Cherry MS, Olympic MS MS20600-20605
- Huck SMLS NAS 1919 S/U NAS 1921
- Blind Bolt, Maxibolt MS 90353 S/U MS 90354 S/U
- Cherrylock “A”
- Code Olympic-Lok NAS 1398/1399 Single Action
- Monobolt IFI-134
- Magnabulb / Hemlock
- Olympic Bulb-Tite
- Automotive Split Rivet
- POP Rivets MIL-R-24243
- AVEX Multi-Grip
- MagnaLok, Interlock, Mega-Grip M7885/10 IFI-134
- Nutserts
- Thin Sheet Nutserts
- AVK Inserts
- Rivnuts/Plusnuts NAS 1329/1330, MS 27130/27131

## D-9000-MIL-1

**Inhalt / Contents:**

| QTY | PART NO. | DESCRIPTION |
|---|---|---|
| 1 EA | **D-700C** | **HAND HYDRAULIC RIVETER,** PRESSURE VALVE |
| 1 EA | **PT-100M** | **AIR HYDRAULIC RIVETER** |
| 1 EA | **PT-4000** | **CORDLESS RIVETER** |
| 1 EA | **D-28** | **HAND RIVETER** |
| 1 EA | F-4000A | BATTERY CHARGER, SMART |
| 2 EA | F-3001A | BATTERY PACK, Ni-MH (12v, 3.2AH) |
| 1 EA | F156 | 3/32-1/8 NOSEPIECE |
| 1 EA | F159 | 1/8 NOSEPIECE |
| 4 EA | F143 | 1/8-3/16 NOSEPIECE |
| 1 EA | F142 | 1/4 NOSEPIECE |
| 1 EA | F168 | 3/16 MONOBOLT NOSEPIECE |
| 1 EA | F169 | 1/4 MONOBOLT NOSEPIECE |
| 1 EA | F580 | 3/16 MS NOSEPIECE |
| 1 EA | F396 | 3/16 BULBTITE NOSEPIECE |
| 1 EA | F398 | 1/4 BULBTITE NOSEPIECE |
| 1 EA | F155 | 1/4 “T” RIVET NOSEPIECE |
| 1 EA | F390 | 3/32 NAS 1400A NOSEPIECE |
| 1 EA | F391 | 1/8 NAS 1400A NOSEPIECE |
| 1 EA | F392 | 5/32 NAS 1400A NOSEPIECE |
| 1 EA | F393 | 3/16 NAS 1400A NOSEPIECE |
| 1 EA | F501 | 1/8 NAS 1900S NOSEPIECE |
| 1 EA | F502 | 5/32 NAS 1900S NOSEPIECE |
| 1 EA | F503 | 3/16 NAS 1900S NOSEPIECE |
| 1 EA | F505U | 5/32 MS90353/54-S/U NOSEPIECE |
| 1 EA | F506 | 3/16 MS90353/54-S/U NOSEPIECE |
| 1 EA | F360 | 6-32 PULL-UP STUD |
| 1 EA | F367 | NO. 6 ANVIL |
| 1 EA | F361 | 8-32 PULL-UP STUD |
| 1 EA | F364 | NO. 8 ANVIL |
| 1 EA | F372 | 10-24 PULL-UP STUD |
| 1 EA | F176 | NO. 10 TSN ANVIL |
| 1 EA | F362 | 10-32 PULL-UP STUD |
| 1 EA | F365 | NO. 10 ANVIL |
| 1 EA | F373 | 1/4-20 PULL-UP STUD |
| 1 EA | F177 | NO. 1/4 TSN ANVIL |
| 1 EA | F363 | 1/4-28 PULL-UP STUD |
| 1 EA | F366 | NO. 1/4 ANVIL |

| QTY | PART NO. | DESCRIPTION |
|---|---|---|
| 1 EA | F374 | 5/16-18 PULL-UP STUD |
| 2 EA | F378 | NO. 5/16 ANVIL |
| 1 EA | F377 | 5/16-24 PULL-UP STUD |
| 1 EA | F375 | 3/8-16 PULL-UP STUD |
| 1 EA | F379 | 3/8 ANVIL |
| 1 EA | F384 | 5 MM PULL-UP STUD |
| 1 EA | F365M | 5 MM ANVIL |
| 1 EA | F380 | 6 MM PULL-UP STUD |
| 1 EA | F366M | 6 MM ANVIL |
| 1 EA | F386 | 8 MM PULL-UP STUD |
| 1 EA | F378M | 8 MM ANVIL |
| 1 EA | F387 | 10 MM PULL-UP STUD |
| 1 EA | F379M | 10 MM ANVIL |
| 1 EA | F170-A | MASTERSHAFT |
| 1 EA | F171 | TURN NUT |
| 1 EA | F187-3BCM | ADAPTER SHAFT, COMPENSATING |
| 1 EA | F187-3ACM | ADAPTER SHAFT, THROUGH HOLE |
| 1 EA | F187-1AR | ADAPTER SLEEVE, ROTATING |
| 1 EA | F687-1AF | ADAPTER SLEEVE, FLATS |
| 1 EA | F687-2A | ADAPTER SHAFT, MS STYLE |
| 3 EA | F702 | SPARE PARTS CANISTER |
| 6 EA | F122-A | 2 PIECE CAST JAW SET |
| 3 EA | F123 | 3 PIECE CAST JAW SET |
| 1 EA | F123-A | 3 PIECE JAW SET/ BB 5/32 |
| 1 EA | F123-B | 3 PIECE JAW SET/ BB 3/16 |
| 1 EA | F128 | JAW HOLDER, BLIND BOLTS |
| 1 EA | F758 | JAW PUSHER BB, D-700 |
| 1 EA | F958 | JAW PUSHER. PT-100 |
| 1 EA | F990 | JAW PUSHER SPRING, PT-100 |
| 1 EA | F3245 | 1/4 JAW FOLLOWER |
| 1 EA | F3081-A | JAW PUSHER SPRING |
| 1 EA | F101 | RIVET NUT STROKE GAGE |
| 1 EA | F269C3 | RIVET GRIP GAGE |
| 1 EA | F609A | METAL WEATHER TIGHT CASE |
| 1 EA | F701-D9 | CD-ROM, USER MANUAL |
| 1 EA | F755-D9000 | LAMINATED TOOL ASSY CARDS |

# Commercial & Aerospace Blind Rivets & Blind Nuts

## Blindnietgeräte Satz BLIND RIVETER KIT




**D-9000-MIL-2**

The **D-9000-MIL-2 Kit** contains the pull-up studs and driving anvils used in conjunction with the hand hydraulic D-700-VM combination riveter/nutsetter, which allows installation of blind nuts (NAS1329/30 MS27130/31) and AVK, TSN® and Nutsert® style inserts. The D-700-VM provides 5,000lbs of pulling force and because of ist unique two-stage valve system, wrist effort is reduced as the pull force increases. The D-700-VM VariMax® feature also allows the pull force to be adjusted when installing Rivnuts®. This minimizes the chance of thread failure from excessive pull force or improper installation due to inadequate upset loads.

A blind nut stroke gage and blind rivet grip gage are also included to help insure proper fastener selection and installation. The kit is housed in a weather tight metal box and comes with a built in fastener and tooling selection chart permanently affixed to the inside lid. Operating instructions are provided in both a written manual and CD-ROM format to help insure proper care and use. This kit has been approved for use in the U.S. Army's Standard Automotive Tool Set ("SATS") and is currently being used by all U.S. Military service branches

**For Rivet Type:**

- CherryMax, Huck Clinch, Allmax M7885/NAS 9300
- Cherry MS, Olympic MS MS20600-20605
- Huck SMLS NAS 1919 S/U NAS 1921
- Blind Bolt, Maxibolt MS 90353 S/U MS 90354 S/U
- Cherrylock "A" Code Olympic-Lok NAS 1398/1399 Single Action
- Monobolt IFI-134
- Magnabulb / Hemlock
- Olympic Bulb-Tite
- Automotive Split Rivet
- POP Rivets MIL-R-24243
- AVEX Multi-Grip
- MagnaLok, Interlock, Mega-Grip M7885/10 IFI-134
- Nutserts
- Thin Sheet Nutserts
- AVK Inserts
- Rivnuts/Plusnuts NAS 1329/1330, MS 27130/27131

**Inhalt / Contents:**

| QTY | PART NO. | DESCRIPTION |
|---|---|---|
| 1 EA | **D-700C** | **HAND HYDRAULIC RIVETER**, PRESSURE VALVE |
| 1 EA | **PT-100M** | **AIR HYDRAULIC RIVETER** |
| 1 EA | **PT-4000** | **CORDLESS RIVETER** |
| 1 EA | **D-28** | **HAND RIVETER** |
| 1 EA | F-4000A | BATTERY CHARGER, SMART |
| 2 EA | F-3001A | BATTERY PACK, Ni-MH (12v, 3.2AH) |
| 1 EA | F156 | 3/32-1/8 NOSEPIECE |
| 1 EA | F159 | 1/8 NOSEPIECE |
| 4 EA | F143 | 1/8-3/16 NOSEPIECE |
| 1 EA | F142 | 1/4 NOSEPIECE |
| 1 EA | F168 | 3/16 MONOBOLT NOSEPIECE |
| 1 EA | F169 | 1/4 MONOBOLT NOSEPIECE |
| 1 EA | F580 | 3/16 MS NOSEPIECE |
| 1 EA | F396 | 3/16 BULBTITE NOSEPIECE |
| 1 EA | F398 | 1/4 BULBTITE NOSEPIECE |
| 1 EA | F155 | 1/4 "T" RIVET NOSEPIECE |
| 1 EA | F390 | 3/32 NAS 1400A NOSEPIECE |
| 1 EA | F391 | 1/8 NAS 1400A NOSEPIECE |
| 1 EA | F392 | 5/32 NAS 1400A NOSEPIECE |
| 1 EA | F393 | 3/16 NAS 1400A NOSEPIECE |
| 1 EA | F501 | 1/8 NAS 1900S NOSEPIECE |
| 1 EA | F502 | 5/32 NAS 1900S NOSEPIECE |
| 1 EA | F503 | 3/16 NAS 1900S NOSEPIECE |
| 1 EA | F505U | 5/32 MS90353/54-S/U NOSEPIECE |
| 1 EA | F506 | 3/16 MS90353/54-S/U NOSEPIECE |
| 1 EA | F360 | 6-32 PULL-UP STUD |
| 1 EA | F367 | NO. 6 ANVIL |
| 1 EA | F361 | 8-32 PULL-UP STUD |
| 1 EA | F364 | NO. 8 ANVIL |
| 1 EA | F372 | 10-24 PULL-UP STUD |
| 1 EA | F176 | NO. 10 TSN ANVIL |
| 1 EA | F362 | 10-32 PULL-UP STUD |
| 1 EA | F365 | NO. 10 ANVIL |
| 1 EA | F373 | 1/4-20 PULL-UP STUD |
| 1 EA | F177 | NO. 1/4 TSN ANVIL |
| 1 EA | F363 | 1/4-28 PULL-UP STUD |
| 1 EA | F366 | NO. 1/4 ANVIL |

| QTY | PART NO. | DESCRIPTION |
|---|---|---|
| 2 EA | F378 | NO. 5/16 ANVIL |
| 1 EA | F377 | 5/16-24 PULL-UP STUD |
| 1 EA | F375 | 3/8-16 PULL-UP STUD |
| 1 EA | F379 | 3/8 ANVIL |
| 1 EA | F384 | 5 MM PULL-UP STUD |
| 1 EA | F365M | 5 MM ANVIL |
| 1 EA | F380 | 6 MM PULL-UP STUD |
| 1 EA | F366M | 6 MM ANVIL |
| 1 EA | F386 | 8 MM PULL-UP STUD |
| 1 EA | F378M | 8 MM ANVIL |
| 1 EA | F387 | 10 MM PULL-UP STUD |
| 1 EA | F379M | 10 MM ANVIL |
| 1 EA | F170-A | MASTERSHAFT |
| 1 EA | F171 | TURN NUT |
| 1 EA | F187-3BCM | ADAPTER SHAFT, COMPENSATING |
| 1 EA | F187-3ACM | ADAPTER SHAFT, THROUGH HOLE |
| 1 EA | F187-1AR | ADAPTER SLEEVE, ROTATING |
| 1 EA | F687-1AF | ADAPTER SLEEVE, FLATS |
| 1 EA | F687-2A | ADAPTER SHAFT, MS STYLE |
| 1 EA | **F1074** | **EXT STR PULLING HD** |
| 1 EA | **F1075** | **RIGHT ANGLE PULLING HD** |
| 1 EA | **F1076** | **OFFSET PULLING HD** |
| 3 EA | F702 | SPARE PARTS CANISTER |
| 6 EA | F122-A | 2 PIECE CAST JAW SET |
| 3 EA | F123 | 3 PIECE CAST JAW SET |
| 1 EA | F123-A | 3 PIECE JAW SET/ BB 5/32 |
| 1 EA | F123-B | 3 PIECE JAW SET/ BB 3/16 |
| 1 EA | F128 | JAW HOLDER, BLIND BOLTS |
| 1 EA | F758 | JAW PUSHER BB, D-700 |
| 1 EA | F958 | JAW PUSHER. PT-100 |
| 1 EA | F990 | JAW PUSHER SPRING, PT-100 |
| 1 EA | F3245 | 1/4 JAW FOLLOWER |
| 1 EA | F3081-A | JAW PUSHER SPRING |
| 1 EA | F101 | RIVET NUT STROKE GAGE |
| 1 EA | F269C3 | RIVET GRIP GAGE |
| 1 EA | F609A | METAL WEATHER TIGHT CASE |
| 1 EA | F701-D9 | CD-ROM, USER MANUAL |

# Cherry - Hydraulisches Hand-Nietgerät
# CHERRY - HYDRAULIC HAND-RIVETER



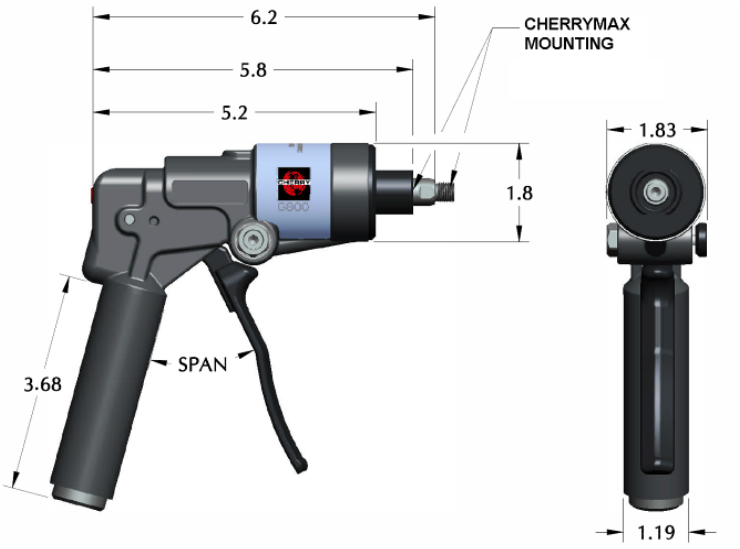


## G800

| | |
|---|---|
| Max. Zugkraft (einstellbar) **/ MAX. PULLING FORCE (adjustable)** | Bis zu / Up to **6000 lbs.** |
| max. Nietdurchmesser / **MAX. RIVET DIAMETER** | **1/4"** (6,4 mm) |
| Abmessungen Gerät (ohne Zugkopf) / **RIVETER DIMENSIONS (without Pulling Head)** | siehe oben / see above |
| Abmessungen Zugkopf) / **DIMENSIONS (without Pulling Head)** | siehe unten / see below |
| Gewicht (ohne Zugkopf) **/ WEIGHT (without Pulling Head)** | 1.7 lbs (0,77 kg) |

Das Gerät **G800** wird mit einem geradem Zugkopf **H800** geliefert.
THE RIVETER **G800** COMES EQUIPPED WITH A STRAIGHT PULLING HEAD **H800**

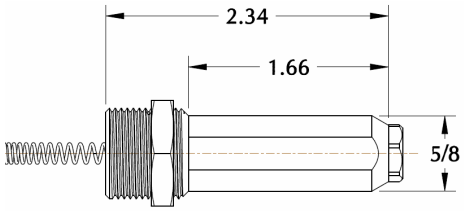


Zugkopf / PULLING HEAD **H800**

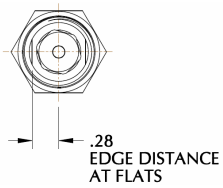


**Der Zugkopf H800 wird empfohlen für die Verarbeitung folgender Blindniete**:
THE PULLING HEAD H800 IS RECOMMEND FOR THE INSTALLATION OF FOLLOWING BLIND-RIVETS:

| | |
|---|---|
| CherryMAX & CherryMAX AB | -4, -5, -6 ( außer/except -6 Aluminium) |
| Blindbolt "S" type (with Shifting Anvil) | -04 & -05 |
| MBC Lock Creator | -4, -5, -6 |
| NAS1900 "U" type (with Shifting Anvil) | -4 & -5 |

Optional sind auch Winkel & Offset-Zugköpfe lieferbar, sowie Zugköpfe für andere Blindniet-Typen

OPTIONAL ARE AVAILABLE RIGHT ANGLE & OFFSET PULLING HEADS
AND ALSO PULLING HEADS FOR OTHER RIVET TYPES.

# Cherry - Hydr. Hand-Nietgerät mit Zubehör im Koffer
# CHERRY - HYDR. HAND RIVETER KIT



## G800-CMR

**Lieferumfang / CONTENS:**

| Beschreibung / DESCRIPTION: | Artikel-Nr. / PART NO. |
|---|---|
| 1 Aufbewahrungskasten / CASE | P1485 |
| 1 Nietgerät / RIVETER (mit Zugkopf H800 / WITH PULLING HEAD H800) | G800 |
| 1 Offset Zugkopf / OFFSET PULLING HEAD | H782 |
| 1 Winkel-Zugkopf / RIGHT ANGLE PULLING HEAD | H753A-456 |
| 1 Mundstück / NOSE TIP | 782-5BB |
| 1 Mundstück / NOSE TIP | 886-003 |
| 1 Klemmlängen-Lehre / GRIP GAUGE | 269C3 |
| 1 Klemmlängen-Lehre / GRIP GAUGE | 269B12 |

**Dokumentation / Manuals& Tool Sheets**

1 Pocket Card, MaxiBolt
1 Pocket Card, CherryMax
1 Cherry Process Manual
1 Manual G800
1 Manual H782
1 Manual H53A-456

**G800-CMR wird für die Verarbeitung folgender Niettypen empfohlen:**
G800-CMR IS RECOMMEND FOR THE INSTALLATION OF FOLLOWING RIVET TYPES:

| | |
|---|---|
| CherryMAX & CherryMAX AB | -4, -5, -6 ( außer/except -6 Aluminium) |
| Blindbolt "S" type (with Shifting Anvil) | -04 & -05 |
| Blindbolt "U" type (mit Mundstück / with Nose Tip 782-5BB) | -05 |
| MBC Lock Creator | -4, -5, -6 |
| NAS1900 "U" type (with Shifting Anvil) | -4 & -5 |
| CherryLOCK "A" Code (mit Mundstück / with Nose Tip 886-003) | -6 |

# Cherry Zugköpfe empfohlen für Hand-Nietgerät G800

# CHERRY PULLING HEADS FOR HAND RIVETER G800

| MODEL NUMBER | JAW P/N | JAW FOLLOWER | NOSE PIECE | INSTALLS THE FOLLOWING PRODUCTS |
|---|---|---|---|---|
|  H800 | *701B18 | *753A14A | *782-456 | CherryMAX, CherryMAX AB: -4, -5, -6 (except 6 Alum)<br>Blindbolt "S" type: -04 & -05<br>MBC Lock Creator: -4, -5, -6<br>NAS1900 "U" type: -4 & -5 |
| | | | 886-003 | CherryLOCK "A" Code: -3 |
| | | | 886-004 | CherryLOCK "A" Code: -4 |
| | | | 886-005 | CherryLOCK "A" Code: -5 |
|  **RIGHT ANGLE: H753A-456**<br>INSTALLS NAS1400 & 1722 RIVETS<br>UP TO -04 GRIP | 782-010 | 886-002 | 886-006 | CherryLOCK "A" Code: -6 |
| | *701B18 | *753A14A | 782-5BB | Blindbolt "U" Type: -05 |
| | | | 782-4MBC | Standard MBC: -4 |
| | | | 782-5MBC | Standard MBC: -5 |
| | 782-010 | 886-002 | 782-6MBC | Standard MBC: -6 |
| | | | 782 -6AL | CherryMAX "AB" -6 Alum, NAS1900 -4, -5, -6 |
| | *701B18 | *753A14A | 782-3 | 3/32" SPR & -3 pull thru NP Rivets |
| | | | 782-4NAS | NAS1900, -4 (no shift washer) |
| | | | 782-5NAS | NAS1900, -5 (no shift washer) |
| | 782-010 | 886-002 | 782-6NAS | NAS1900, -6 (no shift washer) |

| MODEL NUMBER | JAW P/N | NOSE PIECE | INSTALLS THE FOLLOWING PRODUCTS |
|---|---|---|---|
|  **Offset: H782** | *701B18 | *782-456 | CherryMAX & CherryMAX AB: -4, -5 & -6 (except -6 Alum)<br>Blindbolt "S" type: -04 & -05<br>MBC Lock Creator: -4, -5, -6<br>NAS1900 "U" type: -4 & -5 |
| | | 886-003 | CherryLOCK "A" Code: -3 |
| | | 886-004 | CherryLOCK "A" Code: -4 |
| | | 886-005 | CherryLOCK "A" Code: -5 |
| | 782-010 | 886-006 | CherryLOCK "A" Code: -6 |
| | *701B18 | 782-5BB | Blindbolt "U" Type: -05 |
| | | 782-4MBC | Standard MBC: -4 |
| | | 782-5MBC | Standard MBC: -5 |
| | 782-010 | 782-6MBC | Standard MBC: -6 |
| | | 782 -6AL | CherryMAX "AB" -6 Al; NAS1900 -4, -5 & -6 |
| | *701B18 | 782-3 | 3/32" SPR & -3 pull thru NP Rivets |
| | | 782-4NAS | NAS1900, -4 (no shift washer) |
| | | 782-5NAS | NAS1900, -5 (no shift washer) |
| | 782-010 | 782-6NAS | NAS1900, -6 (no shift washer) |

| *MODEL NUMBER* | JAW P/N | NOSE PIECE P/N | INSTALLS THE FOLLOWING PRODUCTS |
|---|---|---|---|
|  **HEAVY DUTY: HD800-8** | *652-043 | *652-024 | CherryMax, "A" Code, "AB" -8 (all materials) |
| | | 652-065 | Maxibolt Plus -5, 6, 8 |
| | 865C25 | 652-035 | Maxibolt -8 "S" type |
| | | 652-065 | Maxibolt -8 "U" type |
| | 744C76 | 652-038 | Maxibolt -6 "S" type |
| | | 652-067 | Maxibolt -6 "U" type |

Bemerkung: Positionen mit einem Stern **(*)** sind Standard-Zubehör und gehören zum Lieferumfang des Zugkopfes.

Notes: Items marked with an asteriks **(*)** are standard components provided with the pulling heads.

# CHERRYMAX

**CherryLock A**
**CherryMax A**
**Intermax**
**Nutplate Rivets**
**MS**

# Nietwerkzeuge
# RIVET TOOLING

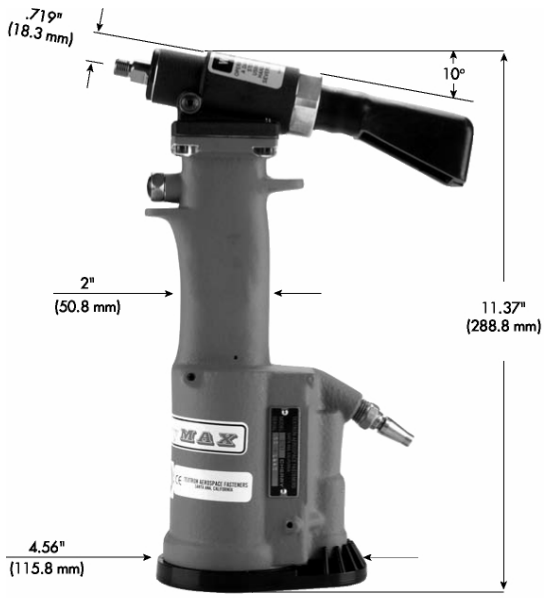


## G 747

AIR PRESSURE 90 PSI (6.2 bar) Min. / 110 PSI (7.6 bar) Max.

STROKE **0.437 inch (11.1 mm)**

PULLING FORCE **2100 Pounds (9.34 kN)** @ 90 PSI (6.2 bar)

CYCLE TIME Approximately One Second

WEIGHT 3.5 Pounds (1.59 kg)

NOISE LEVEL 71 dB (A)

VIBRATION less than 2.5 m/s2

AIR CONSUMPTION 0.09 SCF/cycle (2.55 L/cycle)

**Zugköpfe gehören nicht zum Lieferumfang.**
**Bitte extra bestellen !**

NOSE ASSEMBLIES ARE NOT FURNISHED WITH THE RIVETER AND MUST BE ORDERED SEPARATELY !

## G747 Zugköpfe / PULLING HEADS

| Pulling Head | Type | Adapter | Rivet | Rivet Diameters | Maximum Grip [1] |
|---|---|---|---|---|---|
| **H701 B-456** | Straight | - | CherryMAX® Bulb | 1/8, 5/32, 3/16 [2 3] | All |
| | | | CherryMAX® "A" | 1/8, 5/32, 3/16 [3] | -3 [1] |
| | | | InterMAX | 1/8, 5/32, 3/16 | -3 [1] |
| **H747-3NPR** | Straight | - | Nut-plate | 3/32 | All |
| **H753A-456** | Right Angle | - | CherryMAX® Bulb | 1/8, 5/32, 3/16 [2 3] | All |
| | | | CherryMAX® "A" | 1/8, 5/32, 3/16 [3] | -3 [1] |
| | | | InterMAX | 1/8, 5/32, 3/16 | -3 [1] |
| **H781-456** | Offset | - | CherryMAX® Bulb | 1/8, 5/32, 3/16 [2 3] | All |
| | | | CherryMAX® "A" | 1/8, 5/32, 3/16 [3] | -3 [1] |
| | | | InterMAX | 1/8, 5/32, 3/16 | -3 [1] |
| **H9015-3C** | Straight | 704A9 | MS [4] | 3/32 | All |
| **H9015-4C** | | | | 1/8 | All |
| **H9015-5C** | | | | 5/32 | All |
| **H9015-6C** | | | | 3/16 | All |
| **H955-3** | Straight | - | CherryLock® "A" | 3/32 | -3 [1] |
| **H955-4** | | | | 1/8 | -3 [1] |
| **H955-5** | | | | 5/32 | -3 [1] |
| **H955-6** | | | | 3/16 | -3 [1] |

[1] Nach dem erstem Hub / **On the first stroke.**

[2] Nominal und Übergröße / **Nominal and oversize.**

[3] Kein 3/16" Aluminium, nur legierter Stahl und Monel / **No 3/16" Aluminum, Alloy steel and Monel only.**

[4] Nur geriffelte Stifte / **Serrated stems only.**

# CHERRYMAX

**CherryLock A**
**CherryMax A**
**Intermax**
**MS**

# Nietwerkzeuge
# RIVET TOOLING

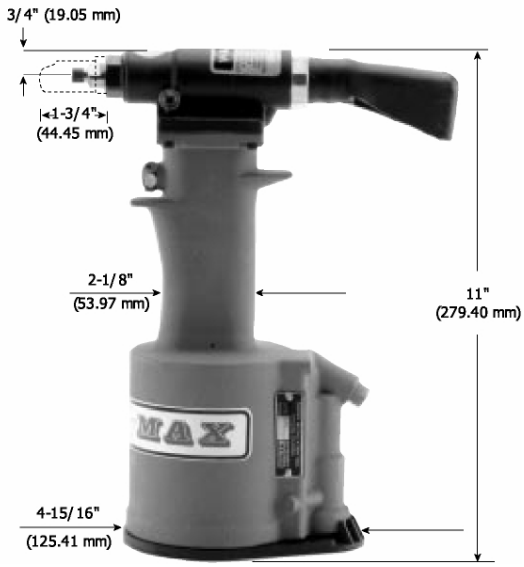


AIR PRESSURE 90 PSI (6.2 bar) Min. / 110 PSI (7.6 bar) Max.

STROKE **.875 inch (22.23 mm)**

PULLING FORCE **1850 Pounds (8.23 kN)** @ 90 PSI (6.2 bar)

CYCLE TIME Approximately one second

WEIGHT 4 1/4 Pounds (1.93 kg)

NOISE LEVEL 72 dB (A)

VIBRATION <2.5 m/s2

AIR CONSUMPTION 3.9 CFM (110.5 liters/M) at 20 Cycles per Minute

**Zugköpfe gehören nicht zum Lieferumfang.**
**Bitte extra bestellen !**

NOSE ASSEMBLIES ARE NOT FURNISHED WITH THE RIVETER AND MUST BE ORDERED SEPARATELY !

# G 746A

## G746A Zugköpfe / PULLING HEADS

| Pulling Head | Type | Adapter | Rivet | Rivet Diameters | Maximum Grip [1] |
|---|---|---|---|---|---|
| **H701 B-456** | Straight | - | CherryMAX® Bulb<br>CherryMAX® "A"<br>InterMAX | 1/8, 5/32, 3/16 [2 3]<br>1/8, 5/32, 3/16 [3]<br>1/8, 5/32, 3/16 | All<br>-9 [1]<br>-9 [1] |
| **H753A-456** | Right Angle | - | CherryMAX® Bulb<br>CherryMAX® "A"<br>InterMAX | 1/8, 5/32, 3/16 [2 3]<br>1/8, 5/32, 3/16 [3]<br>1/8, 5/32, 3/16 | All<br>-4 [1]<br>-4 [1] |
| **H781-456** | Offset | - | CherryMAX® Bulb<br>CherryMAX® "A"<br>InterMAX | 1/8, 5/32, 3/16 [2 3]<br>1/8, 5/32, 3/16 [3]<br>1/8, 5/32, 3/16 | All<br>-4 [1]<br>-4 [1] |
| **H9015-3C**<br>**H9015-4C**<br>**H9015-5C**<br>**H9015-6C** | Straight | 704A9 | MS [4] | 3/32<br>1/8<br>5/32<br>3/16 | All<br>All<br>All<br>All |
| **H955-3**<br>**H955-4**<br>**H955-5**<br>**H955-6** | Straight | - | CherryLock® "A" | 3/32<br>1/8<br>5/32<br>3/16 | -9 [1]<br>-9 [1]<br>-9 [1]<br>-9 [1] |

[1] Nach dem erstem Hub / **On the first stroke.**

[2] Nominal und Übergröße / **Nominal and oversize.**

[3] Kein 3/16" Aluminium, nur legierter Stahl und Monel / **No 3/16" Aluminum, Alloy steel and Monel only.**

[4] Nur geriffelte Stifte / **Serrated stems only.**

| CHERRYMAX<br>Blind Rivets | Nietwerkzeuge<br>RIVET TOOLING |
|---|---|



# GB704

**Pneudraulisches Nietgerät**
**PNEUDRAULIC RIVETER**

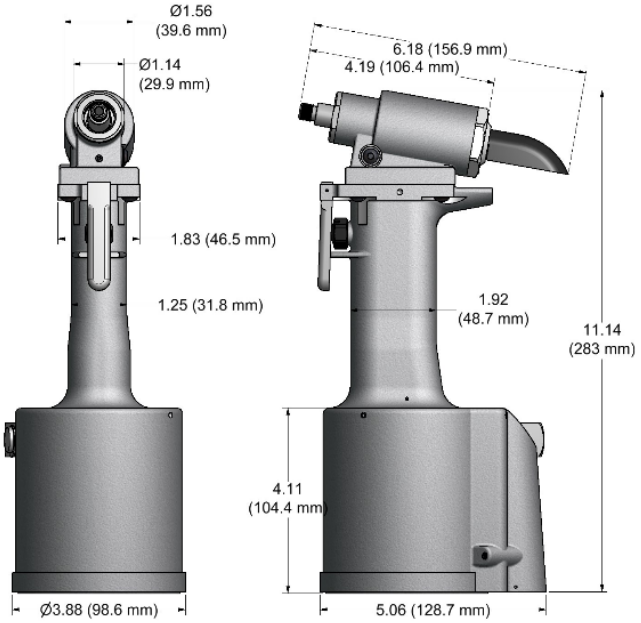


**SPEZIFIKATIONEN / SPECIFICATIONS**

| | | |
|---|---|---|
| Gewicht | Weight | 4.30 lbs. (1.95 kg) |
| Hub | Setting stroke | **.540" (13.7 mm)** |
| Leistung | Rated Pull load | **3300 lbs. @ 90 psi (14,68 kN @ 6,2 bar)** |

## GB704 - SELECTION CHART

| FASTENER | DIA | STRAIGHT | RIGHT ANGLE 3 | OFFSET |
|---|---|---|---|---|
| CHERRYMAX®<br>CHERRYMAX 'AB'<br>NAS1919U<br>NAS1921U<br>MIL-R-7885<br>NAS9301-9312<br>BACR15FR/FP<br>BACR15GF/GK | 1/8<br>5/32<br>3/16 | 456MAX-701-17 2<br>456MAX-704-35 2<br>456MAX-749-35 4,2 | 456MAX-753A-54 2 | 456MAX-704-43OS 2 |
| NUT PLATE RIVETS<br>MS20600 SERIES<br>CCR244/264/274<br>MS/9SP/PT<br>BACR15CC/CF/DA/DR | 3/32<br>1/8<br>5/32<br>3/16 | 3C-704A-16<br>4C-704A-16<br>5C-704A-16<br>6C-704A-16 | 3C-704-54RA<br>4C-704-54RA<br>5C-704-54RA<br>6C-704-54RA | 3C-704-40OS<br>4C-704-40OS<br>5C-704-40OS<br>6C-704-40OS |
| 'A' CODE<br>NAS1398A<br>NAS1399A | 3/32<br>1/8<br>5/32<br>3/16 | 3A-704A-16<br>4A-704A-16<br>5A-704A-16<br>6A-704A-16 | 3A-704-54RA<br>4A-704-54RA<br>5A-704-54RA<br>6A-704-54RA | 3A-704-40OS<br>4A-704-40OS<br>5A-704-40OS<br>6A-704-40OS |
| GROUND STUD<br>M83454<br>BACS53B1EA1/2 | 8/32 | GS8-704-56 | GS8-704-54RA | GS8-715-40OS 1 |

| | |
|---|---|
| 1) 715 SERIES NOSE ASSEMBLIES REQUIRE 704001 ADAPTER. | NOTE: THE LAST 2 DIGITS OF THE NOSE ASSEMBLY REPRESENTS THE LENGTH THE NOSE EXTENDS FROM THE TOOL I.E. -20 = 2.0 INCHES |
| 2) INSTALLS 1/8", 5/32", AND 3/16" DIAMETERS | |
| 3) RIGHT ANGLE NOSE ASSEMBLIES MAY REQUIRE MORE THAN ONE PULL | |
| 4) FRONT END EJECTING NOSE ASSEMBLY. | |

| CHERRYMAX<br>Blind Rivets | Nietwerkzeuge<br>RIVET TOOLING |
|---|---|




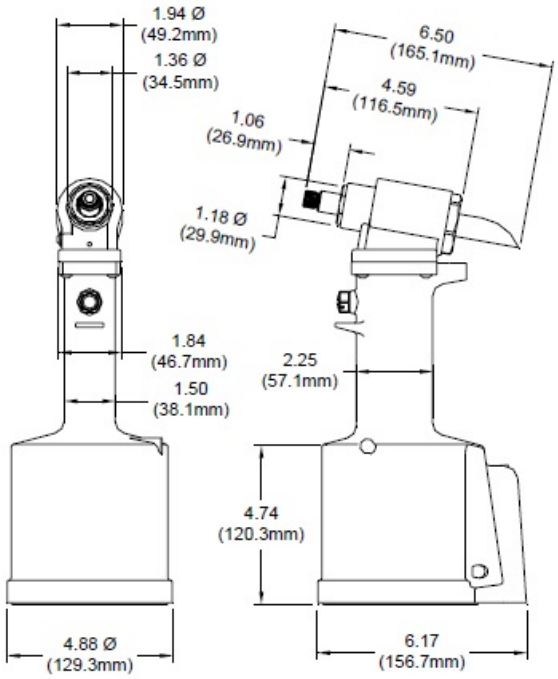


# GB744

**Pneudraulisches Nietgerät**
**PNEUDRAULIC RIVETER**

**SPEZIFIKATIONEN / SPECIFICATIONS**

| | | |
|---|---|---|
| Gewicht | Weight | 7.00 lbs. (3,17 kg) |
| Hub | Setting stroke | **.580" (14,7 mm)** |
| Leistung | Rated Pull load | **3800 lbs @ 90 psi (16,91 kN @ 6,2 bar)** |

## GB744 - SELECTION CHART

| FASTENER | DIA | STRAIGHT | RIGHT ANGLE 2,1 | OFFSET 1 |
|---|---|---|---|---|
| CHERRYMAX® | 1/8 | 456MAX-701-17 1,2 | 456MAX-753A-54 1,2 | 456MAX-704-43OS 1,2 |
| ALLMAX® | 5/32 | 456MAX-744-20 1 | | 456MAX-744-50OS 1 |
| HUCKMAX® | 3/16 | 456MAX-749-35 1,2,3 | | |
| HUCK-CLINCH®<br>MIL-R-7885<br>NAS9301-9312<br>BACR15FR/FR<br>BACR15GJ/GK | 1/4 | 08MAX-744-20 | | 08MAX-744-50OS |

1) ALL THREE DIAMETERS CAN BE INSTALLED WITH ONE NOSE ASSEMBLY.

2) NOSE ASSEMBLIES REQUIRE THE 744704 ADAPTER.

3) FRONT END EJECTING NOSE ASSEMBLY.

4) RIGHT ANGLE NOSE ASSEMBLY MAY REQUIRE MORE THAN 1 PULL.

NOTE: THE LAST 2 DIGITS OF THE NOSE ASSEMBLY REPRESENTS

THE LENGTH THE NOSE EXTENDS FROM THE TOOL I.E. -20 = 2.0 INCHES

# CHERRYLOCK "A" BLIND RIVETS

## Nietwerkzeuge RIVET TOOLING




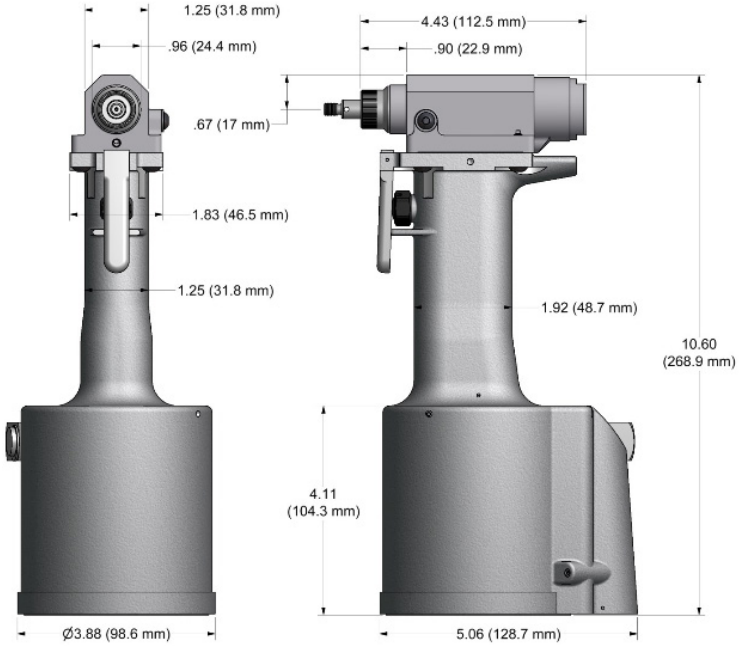


## GB715

**Pneudraulisches Nietgerät**
**PNEUDRAULIC RIVETER**

Accepts Gage Bilt 715 and 51 series nose assemblies
Accepts all Olympic® screw-on nose assemblies
Accepts Cherry® 9015 & 9055 series nose assemblies

**SPEZIFIKATIONEN / SPECIFICATIONS**

| | | |
|---|---|---|
| Gewicht | Weight | 3.80 lbs. (1,72 kg) |
| Hub | Setting stroke | **1.20" (30,5 mm)** |
| Leistung | Rated Pull load | **1400 lbs @ 90 psi (6,23 kN @ 6,2 bar)** |

## GB715 - SELECTION CHART

| FASTENER | DIA | STRAIGHT | RIGHT ANGLE | OFFSET |
|---|---|---|---|---|
| MS20600 SERIES<br>MS/9SP/PT<br>BACR15CC/CF/DA | 3/32<br>1/8<br>5/32 3<br>3/16 3 | 3C-715B-43<br>4C-715B-43<br>5C-715B-43<br>6C-715B-43 | 3C-715-54RA<br>4C-715-54RA<br>5C-715-54RA<br>6C-715-54RA | 3C-715-40OS<br>4C-715-40OS<br>5C-715-40OS<br>6C-715-40OS |
| A' CODE<br>NAS1398A<br>NAS1399A | 3/32<br>1/8<br>5/32 3<br>3/16 4 | 3A-715B-43<br>4A-715B-43<br>5A-715B-43<br>6A-715B-43 | 3A-715-54RA<br>4A-715-54RA<br>5A-715-54RA<br>6A-715-54RA | 3A-715-40OS<br>4A-715-40OS<br>5A-715-40OS<br>6A-715-40OS |
| BLIND RIVET (SINGLE ACTION)<br>WITH OR W/OUT DRIVE WASHER<br>NAS1900 S & U SERIES | 1/8<br>5/32 3<br>3/16 3 | SMLS04-715B-43<br>SMLS05-715B-43<br>SMLS06-715B-43 | SMLS04-715-54RA<br>SMLS05-715-54RA<br>SMLS06-715-54RA | SMLS04-715A-40OS<br>SMLS05-715A-40OS<br>SMLS06-715A-40OS |
| CHERRYMAX®,<br>CHERRYMAX® 'AB',<br>MBC® LOCK CREATOR<br>BACR15FR/FP, BACR15GF/GK,<br>NAS1900 S & U SERIES BLIND RIVET<br>WITH DRIVE WASHER | 1/8<br>5/32 3<br>3/16 3 | 456MAX-715-43 2 | 456MAX-715A-54RA 2 | 456MAX-715A-40OS 2 |
| GROUND STUD | 8/32<br>1/32 | GS8-715B-43<br>GS10-715B-43 | | |
| FASTACK®<br>AF5055 | 3/32<br>1/8<br>5/32<br>3/16 | 3C-715B-43<br>4C-715B-43<br>5C-715B-43<br>6C-715B-43 | 3C-715A-54RA<br>4C-715A-54RA<br>5C-715A-54RA<br>6C-715A-54RA | 3C-715-40OS<br>4C-715-40OS<br>5C-715-40OS<br>6C-715-40OS6 |
| SUPERTACK®<br>AF5075, AF5076<br>S149A020 | 1/8<br>5/32<br>3/16 | 3A-715B-43<br>4A-715B-43<br>5A-715B-43 | 3A-715A-54RA<br>4A-715A-54RA<br>5A-715A-54RA | 3A-715-40OS<br>4A-715-40OS<br>5A-715-40OS |

**ALL COUNTERSUNK 'C' NOSE ASSEMBLIES MAY USED TO INSTALL BOTH UNIVERSAL AND COUNTERSUNK HEAD RIVETS.

1) RIGHT ANGLE NOSE ASSEMBLIES MAY REQUIRE MORE THAN ONE PULL

2) INSTALLS 1/8, 5/32 & 3/16 DIAMETERS

3) ALUMINUM ONLY.

4) SELF-PLUGGING ALUMINUM ONLY.

NOTE: THE LAST 2 DIGITS OF THE NOSE ASSEMBLY REPRESENTS THE LENGTH THE NOSE EXTENDS FROM THE TOOL I.E. -20 = 2.0 INCHES

| CHERRYLOCK "A"<br>BLIND RIVETS | Nietwerkzeuge<br>RIVET TOOLING |
|---|---|




## GB740

**Pneudraulisches Nietgerät**
**PNEUDRAULIC RIVETER**

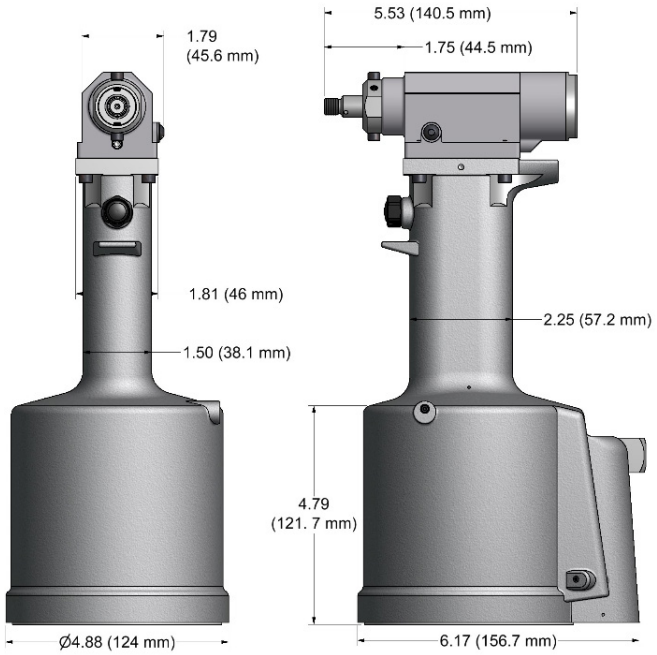


**SPEZIFIKATIONEN / SPECIFICATIONS**

| | | |
|---|---|---|
| Gewicht | Weight | 6.50 lbs. (2,94 kg) |
| Hub | Setting stroke | **1.25" (31,7 mm)** |
| Leistung | Rated Pull load | **2400 lbs @ 90 psi (10,68 kN @ 6,2 bar)** |

**GB740 - SELECTION CHART**

| FASTENER | DIA | STRAIGHT | RIGHT ANGLE 2,1 | OFFSET 1 |
|---|---|---|---|---|
| MS20600 SERIES<br>MS/9SP/PT<br>NUT PLATE<br>BACR15CC/CF/DA/DR | 1/8<br>5/32<br>3/16<br>1/4 | 4C-740B-52<br>5C-740B-52<br>6C-740B-52<br>8C-740B-52 | 4C-715-54R<br>5C-715-54R<br>6C-715-54R | 4C-715-40OS<br>5C-715-40OS<br>6C-715-40OS |
| OLYMPIC LOK<br>BULB LOK<br>NAS1398A, NAS1399A<br>NAS1738A. NAS1739A<br>CHERRYLOCK® 'A' | 1/8<br>5/32<br>3/16<br>1/4 | 4A-740B-52<br>5A-740B-52<br>6A-740B-52<br>8A-740B-52 | 4A-715A-54R<br>5A-715A-54R<br>6A-715A-54R | 4A-715-40OS<br>5A-715-40OS<br>6A-715-40OS |
| CHERRYLOCK®<br>NAS 1398, NAS 1399 3<br>NAS 1738, NAS 1739 4 | 1/8<br>5/32<br>3/16<br>1/4 | 4C-640-64<br>5C-640-64<br>6C-640-64<br>8C-640-64 | | 4C-640A-50<br>5C-640A-50<br>6C-640A-50<br>8C-640A-50 |
| GROUND STUD<br>M83454<br>BACS53B1EA1/2 | # 8-32 | GS8-715B-43 1 | GS8-715-54RA | GS8-715-40OS |

1) THESE NOSE ASSEMBLIES REQUIRE 740715 ADAPTER.

2) RIGHT ANGLE NOSE ASSEMBLIES MAY REQUIRE MORE THAN 1 PULL.

3) ALUMINUM & MONEL ONLY IN 1/4 DIAMETER.

4) THRU 3/16 DIAMETER ONLY.

NOTE: COUNTERSUNK 'C' NOSE ASSEMBLIES MAY BE USED TO INSTALL BOTH UNIVERSAL AND COUNTERSUNK HEAD RIVETS.

NOTE: THE LAST 2 DIGITS OF THE NOSE ASSEMBLIES REPRESENTS THE LENGTH THE NOSE ASSEMBLY EXTENDS FROM TOOL i.e - 52 = 5.2 inches.

| CHERRYLOCK | Nietwerkzeuge<br>RIVET TOOLING |
|---|---|




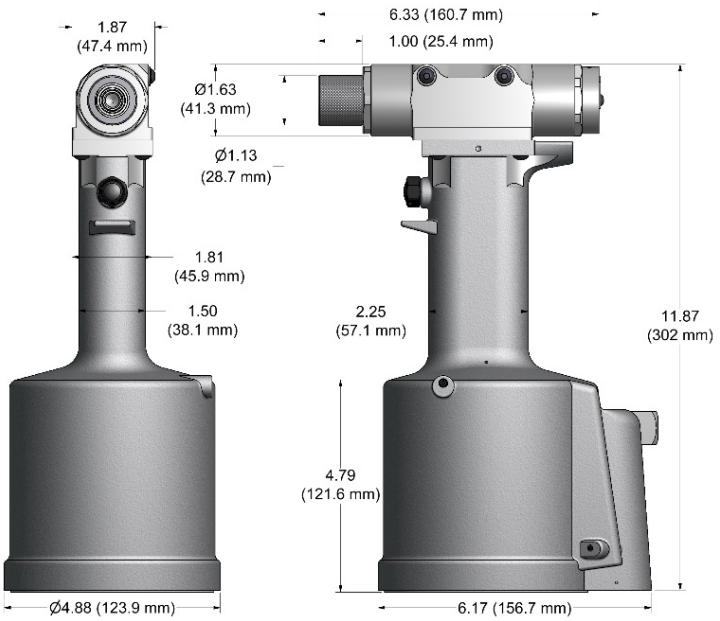


## GB784

**Pneudraulisches Nietgerät**
**PNEUDRAULIC RIVETER**

**SPEZIFIKATIONEN / SPECIFICATIONS**

| | | |
|---|---|---|
| Gewicht | Weight | 6.25 lbs. (2,83 kg) |
| Hub | Setting stroke | **.940" (23,9 mm)** |
| Leistung | Rated Pull load | **2650 lbs. @ 90 psi (11,79 kN @ 6,2 bar)** |

## **Gerader Zugkopf /** STRAIGHT PULLING HEAD

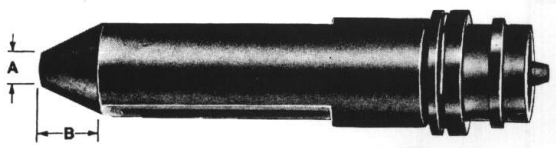


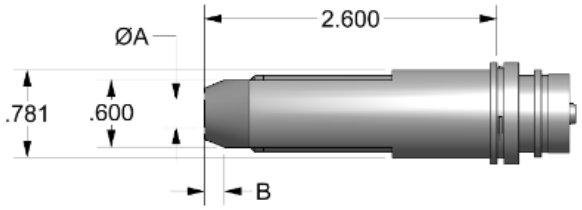


Empfohlenes Nietgerät / **RECOMMEND RIVETER:** **GB784**, G784

**Für Senkkopf- und Universal-Rundkopf Niete**
FOR COUNTERSUNK HEAD AND UNIVERSAL HEAD

**(NAS1398, NAS1399, NAS1738, NAS1739)**

| **Artikel-Nr.**<br>PART NO. | **Nietdurchmesser**<br>RIVET SIZE | **A** | **B** |
|---|---|---|---|
| **3C-681-25** | **3/32"** (2,4 mm) | **.163** (4.14 mm) | **.332** (8,43 mm) |
| **4C-681-25** | **1/8"** (3,2 mm) | **.208** (5,28 mm) | **.341** (8,66 mm) |
| **5C-681-25** | **5/32"** (4,0 mm) | **.269** (6,83 mm) | **.352** (8,94 mm) |
| **6C-681-25** | **3/16"** (4,8 mm) | **.335** (8,51 mm) | **.386** (9,80 mm) |
| **8C-681-25** | **1/4"** (6,4 mm) | **.458** (11,63 mm) | **.398** (10,11 mm) |

# Commercial Blind Rivets
## Nutplate Rivets

**Nietwerkzeuge**
**RIVET TOOLING**




## GB703

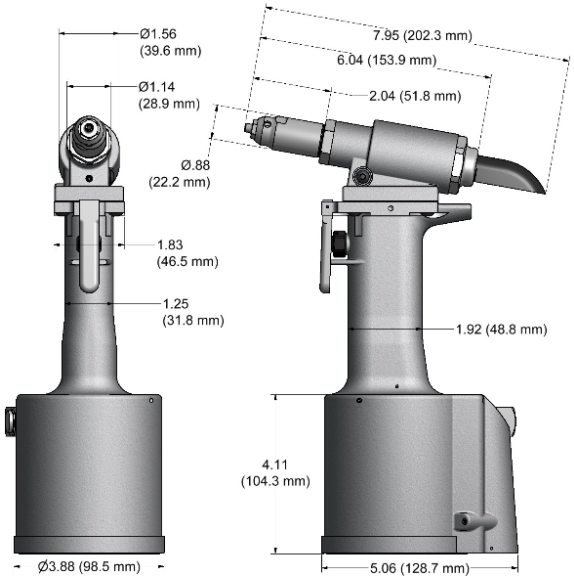


**Pneudraulisches Nietgerät**
**PNEUDRAULIC RIVETER**
Accepts Cherry® H703 & H743 nose assemblies

**SPEZIFIKATIONEN / SPECIFICATIONS**

| | | |
|---|---|---|
| Gewicht | Weight | 4.50 lbs. (2,04 kg) |
| Hub | Setting stroke | **.780" (19,8 mm)** |
| Leistung | Rated Pull load | **2200 lbs. @ 90 psi (9,79 kN @ 6,2 bar)** |

## GB703 - SELECTION CHART

| RIVET | DIA | NOSE ASSEMBLY | NOSE TIP 1 | JAW | FOLLOWER | DESIGNATION |
|---|---|---|---|---|---|---|
| AVEX® (1624 PROTRUDING HEAD) | 3/16 | AV6-743A-18 1 | 10141 | 30617 | 40605 | AV6 |
| AVEX (1624 COUNTERSUNKHEAD) | 3/16 | 6C-743A-18 1 | 10141-1 | 30617 | 40605 | 6C |
| KLAMP-TITE® (STRUCTURAL) | 3/16 | 6KT-703-18 1 | 10263 | 30617 | 40605 | 6KT |
| RIVET | 1/4 | 8KT-743A-2 2 | - | - | - | 8KT |
| MACHINE SCREW RIVET | 5MM | MS5M-703-18 1 | 10332 | 30617 | 40605 | 5MM |
| NAS1719, NAS1720, NAS1721 | 1/8 | MBC04-703-18 1 | 10251 | 30617 | 40307 | MBC04 |
| MBC® | 5/32 | MBC05-703-18 1 | 10252 | 30617 | 40605 | MBC05 |
| | 3/16 | MBC06-703-18 1 | 10253 | 30617 | 40605 | MBC06 |
| MILLIMETER SEAL PLUG | 4MM | 5N-703-18 1 | 10203 | 30617 | 40605 | 5N |
| | 5MM | 6N-703-18 1 | 10204 | 30617 | 40605 | 6N |
| MONOBOLT® RIVET | 3/16 | MB06-734A-20 2,5 | - | - | - | MB06 |
| | 1/4 3 | MB08-734A-20 2,5 | - | - | - | MB08 |
| NUTPLATE RIVET | | | | | | |
| CCR244/264/274 | 3/32 | 3NP-703-18 1 | 10231 | 30617 | 40307 | 3NP |
| BACR15DR | 1/8 | 5N-703-18 1 | 10203 | 30617 | 40605 | 5N |
| MS20600 | | | | | | |
| POP® OPEN END | 3/32 | 3N-703-18 1 | 10201 | 30617 | 40307 | 3N |
| NAIL RIVET | 1/8 | 4N-703-18 1 | 10202 | 30617 | 40307 | 4N |
| | 5/32 | 5N-703-18 1 | 10203 | 30617 | 40605 | 5N |
| | 3/16 | 6N-703-18 1 | 10204 | 30617 | 40605 | 6N |
| | 1/4 3 | 8N-743A-24 2 | - | - | - | 8N |
| PLASTIC SPLIT RIVET | 3/32 | 3P-703-18 1 | 10247-1 | 30617 | 40307 | 3P |
| | 1/8 | 4P-703-18 1 | 10202-4 | 30617 | 40307 | 4P |
| | 5/32 | 5P-703-18 1 | 10203-2 | 30617 | 40605 | 5P |
| | 3/16 | 6P-703-18 1 | 10167 | 30617 | 40605 | 6P |
| | 1/4 | 8P-743A-24 2 | - | - | - | 8P |
| SCREW RIVET | 3/16 | 6SR-703-18 1 | 13506 | 30617 | 40605 | 6SR |
| T RIVET® | 3/16 | 6T-703-18 1 | 10209 | 30617 | 40605 | 6T |
| | 1/4 3 | 8T-743A-24 2 | - | - | - | 8T |
| TLR® RIVET | 1/4 | 8TLR-743A-24 2 | - | - | - | 8TLR |
| **COUNTERSUNK HEAD** | 3/16 | C6-734A-20 2,5 | - | - | - | C6 |
| MAGNA-LOK® & SERRATED STEM | 1/4 4 | C8-734A-20 2,5 | - | - | - | C8 |
| STRUCTURAL RIVETS | | | | | | |
| **PROTRUDING HEAD** | 3/16 | PH6-734A-20 2,5 | - | - | - | PH6 |
| MAGNA-LOK® & SERRATED STEM | 1/4 4 | PH8-734A-20 2,3,5 | - | - | - | PH8 |
| STRUCTURAL RIVETS | | | | | | |

**1) YOU CAN CHANGE THE 703-18 NOSE ASSEMBLY (INCLUDED WITH TOOL) TO INSTALL OTHER FASTENERS BY PURCHASING NOSE TIP SHOWN AND USING APPROPRIATE FOLLOWER SHOWN.**

2) NOSE ASSEMBLIES WITH A 743A-24 AND 734A-20 DESIGNATION, I.E. 8N-743A-24, MUST BE ORDERED AS COMPLETE NOSE ASSEMBLY.

3) ALUMINUM RIVET STEEL MANDREL ONLY (100 PSI REQUIRED FOR ALL 1/4" STEEL RIVETS).

4) 1/4" ALUMINUM ONLY.

5) NOSE ASSEMBLIES WITH A 734A DESIGNATION, I.E. PH6-734A-20, ARE FOR SERRATED STEM RIVETS ONLY. IF YOU ARE PULLING BOTH SMOOTH AND SERRATED STEM RIVETS YOU MUST ORDER THE NOSE ASSEMBLY WITH A 743A DESIGNATION, I.E. MGL06-743A-24.

NOTE: THE LAST 2 DIGITS OF THE NOSE ASSEMBLY REPRESENTS THE LENGTH THE NOSE EXTENDS FROM THE TOOL I.E. -20 = 2.0 INCHES

# Commercial & Aerospace Blind Rivets

## Nietwerkzeuge RIVET TOOLING



## GB751

**Pneudraulisches Nietgerät**
**PNEUDRAULIC RIVETER**
Accepts 3/4" dia. Gage Bilt & Huck® noses

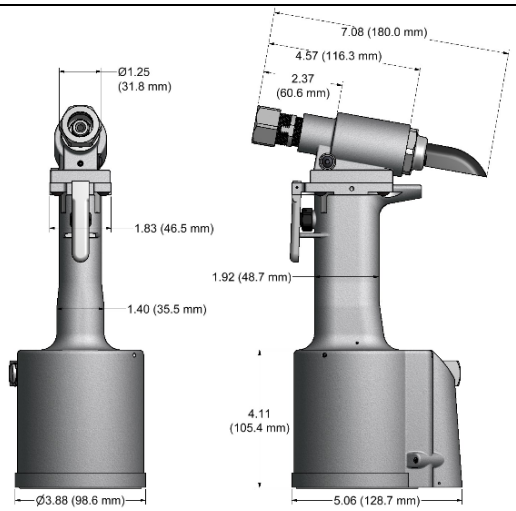


**SPEZIFIKATIONEN / SPECIFICATIONS**

| | | |
|---|---|---|
| Gewicht | Weight | 4.50 lbs. (2,04 kg) |
| Hub | Setting stroke | **.780" (19,8 mm)** |
| Leistung | Rated Pull load | **2200 lbs. @ 90 psi (9,79 kN @ 6,2 bar)** |

## GB751 - SELECTION CHART

| FASTENER | DIA | STRAIGHT | | RIGHT ANGLE 1 | OFFSET |
|---|---|---|---|---|---|
| **BLIND BOLT (SINGLE ACTION) WITH OR W/OUT DRIVE WASHER** MS90353S & U / MS90354S & U MS21140S & U / MS21141S & U MAXIBOLT®, BACB30YY, YU, & YT HS519 | 1/8 | SB04-752C-20 SB04-752C80 | SB04-752C-45 | SB04-751B-54R | SB04-752A-43OS |
| | 5/32 | SB05-752C-20 SB05-752C-80 | SB05-752C-45 | SB05-751B-54RA | SB05-752A-43OS |
| **BLIND BOLT (SINGLE ACTION) WITH DRIVE WASHER** MS90353S & U / MS90354S & U MS21140S & U / MS21141S & U MAXIBOLT®, BACB30YY, YU, & YT HS5192 | 1/8 | UBB04-752C-20 UBB04-752C-80 | UBB04-752C-45 | UBB04-715B-54R | UBB04-752A-43OS |
| | 5/32 | UBB05-752C-20 UBB05-752C-80 | UBB05-752C-45 | UBB05-715B-54R | UBB04-752A-43OS |
| EN6122 & UAB130-EU EN6127 & UAB6127-EU EN6128 & UAB100-EU EN6129 & UABP-EU MAXIBOLT® PLUS | 5/32 3/16 1/4 3 | UAB568-713-21 4 | UAB568-713-61 4 | | |
| **UNIMATIC® BLIND RIVET (SINGLE ACTION) WITH OR W/OUT DRIVE WASHER** NAS1900 S & U SERIES | 1/8 | SMLS04-752C-20 | SMLS04-752C-45 | SMLS04-751B-54RA | SMLS04-752A-43OS |
| | 5/32 | SMLS05-752C-20 | SMLS05-752C-45 | SMLS05-751B-54RA | SMLS05-752A-43OS |
| | 3/16 | SMLS06-752C-20 | SMLS06-752C-45 | SMLS06-751B-54RA | SMLS06-752A-43OS |
| | 1/4 3 | SMLS08-713-20 | SMLS08-713-45 | SMLS08-751B-54RA 6 | SMLS08-752A-43OS 3 |
| **UNIMATIC® BLIND RIVET (SINGLE ACTION) WITH DRIVE WASHER** NAS1900 S & U SERIES | 1/8 5/32 3/16 | 456UBR-751A-21 2 | 456UBR-751A-61 2 | 456UBR-751D-54RA 2 | 456MAX-731-43OS 2 |
| | 1/4 3 | UBR08-713-20 | UBR08-713-45 | UBR08-751B-54R | UBR08-204D-27OS UBR08-204D-37OS |
| "A" CODE NAS1398A & NAS1399A | 3/32 | 3A-352B-25 | | 3A-751C-54RA | 3A-752A-43OS |
| | 1/8 | 4A-752C-20 | 4A-752C-45 | 4A-751C-54RA | 4A-752A-43OS |
| | 5/32 | 5A-752C-20 | 5A-752C-45 | 5A-751C-54RA | 5A-752A-43OS |
| | 3/16 | 6A-752B-20 | 6A-752B-45 | 6A-751C-54RA | 6A-752A-43OS |
| NUT PLATE RIVETS CCR244/264/274 BACR15DR MS20600 | 3/32 | 3NP-352-21 | 3NP-352-61 | 3NP-751B-54RA | 3NP-751-43OS |
| | 1/8 | 5N-352-21 | 5N-352-61 | 45N-751B-54RA | 5N-751-43OS |
| CHERRYMAX®, CHERRYMAX® 'AB', MBC® LOCK CREATOR BACR15FR/FP, BACR15GF/GK, NAS1900 S & U SERIES BLIND RIVET WITH DRIVE WASHER | 1/8 5/32 3/16 | 456MAX-751-21 2 | 456MAX-751A-61 2 | 456MAX-751D-54RA 2 | 456MAX-752A-42OS 2 |
| ASP® ASP 2, ASP PF, ASP 4 FF, ASP 2 F, ASP 2 LC | 13/64 | ASP06-752B-20 | ASP06-752B-45 | ASP06-751B-54RA | ASP06-752A-43OS |
| NAS1719, NAS1720 NAS1721 | 1/8 | MBC04-752C-20 | MBC04-752C-45 | MBC04-751C-54RA | MBC04-752A-43OS |
| | 5/32 | MBC05-752C-20 | MBC05-752C-45 | MBC05-751C-54RA | MBC05-752A-43OS |
| | 3/16 | MBC06-752B-20 | MBC06-752B-45 | MBC06-751C-54RA | MBC06-752A-43OS |
| GROUND STUD, M83454 & BACS53B | 8/32 | GS8-752C-20 | GS8-752C-45 | GS8-751B-54RA | GS8-752A-43OS |
| | 10/32 | GS10-752C-20 | GS10-752C-45 | GS10-752A-54RA | GS10-752A-43OS |
| POP® OPEN END NAIL RIVET | 3/32 | 3N-751-23 | 3N-352-61 | 3N-751B-54RA | 3N-751-43OS |
| | 1/8 | 4N-751-23 | 4N-352-61 | 45N-751B-54RA | 4N-751-43OS |
| | 5/32 | 5N-751-23 | 5N-352-61 | 45N-751B-54RA | 5N-751-43OS |
| | 3/16 | 6N-751-23 | 6N-352-61 | 6N-751C-54RA | 6N-751-43OS |

1) RIGHT ANGLE NOSE ASSEMBLIES MAY REQUIRE MORE THAN ONE PULL.
2) INSTALLS 1/8", 5/32" & 3/16" DIAMETERS.
3) ALUMINUM ONLY.
4) INSTALLS 5/32", 3/16" & 1/4" DIAMETERS.
5) BACS53B -10 ONLY

NOTE: THE LAST 2 DIGITS OF THE NOSE ASSEMBLY REPRESENTS THE LENGTH THE NOSE EXTENDS FROM THE TOOL I.E. -20 = 2.0 INCHES

6) THESE NOSES FOR LIGHT DUTY / REPAIR ONLY. CONSULT GAGE BILT FOR HIGH PRODUCTION APPLICATIONS.

# Commercial & Aerospace Blind Rivets

# Nietwerkzeuge RIVET TOOLING



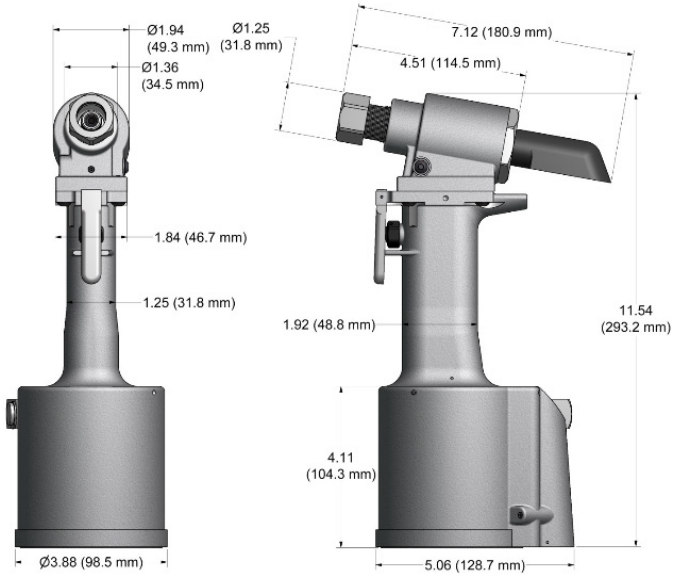


## GB752

**Pneudraulisches Nietgerät**
**PNEUDRAULIC RIVETER**
Accepts 3/4" dia. Gage Bilt & Huck® noses

**SPEZIFIKATIONEN / SPECIFICATIONS**

| | | |
|---|---|---|
| Gewicht | Weight | 4.30 lbs. (1,95 kg) |
| Hub | Setting stroke | **.500" (12,7 mm)** |
| Leistung | Rated Pull load | **3800 lbs @ 90 psi (16,91 kN @ 6,2 bar)** |

## GB752 - SELECTION CHART

| FASTENER | DIA | STRAIGHT | | *RIGHT ANGLE 1 | **OFFSET | |
|---|---|---|---|---|---|---|
| COMMERCIAL LOCKBOLTS | 3/16<br>1/4 | LB06-722-20<br>LB08-722-20 | LB06-722-60<br>LB08-722-60 | | | |
| MULTI-GRIP LOCKBOLTS | 3/16<br>1/4 5 | MG06-722-20<br>MG08-722-20 | MG06-722-60<br>MG08-722-60 | | | |
| **BLIND BOLT (SINGLE ACTION) WITH OR W/OUT DRIVE WASHER** MS90353S & U / MS90354S & U MS21140S & U / MS21141S & U MAXIBOLT®, BACB30YY, YU, & YT | 1/8<br>5/32<br>3/16 | SB04-752C-20<br>SB05-752C-20<br>SB05-752C-80<br>SB06-752B-20<br>SB06-752B-80 | SB04-752C-45<br>SB05-752C-45<br>SB06-752B-45 | SB04-751B-54RA<br>SB05-751B-54RA<br>SB06-751B-54RA 6 | SB04-752A-43OS<br>SB05-752A-43OS<br>SB06-204D-27OS | |
| **BLIND BOLT (SINGLE ACTION) WITH DRIVE WASHER** MS90353S & U / MS90354S & U MS21140S & U / MS21141S & U MAXIBOLT®, BACB30YY, YU, & YT | 1/8<br>5/32<br>3/16 | UBB04-752C-20<br>UBB05-752C-20<br>UBB05-752C-80<br>UBB06-752B-20<br>UBB06-752B-80 | UBB04-752C-45<br>UBB05-752C-45<br>UBB06-752B-45 | UBB04-751B-54RA<br>UBB05-751B-54RA<br>UBB06-751B-54RA | UBB04-752A-43OS<br>UBB05-752A-43OS<br>UBB06-204D-27OS | |
| EN6122 & UAB130-EU EN6127 & UAB6127-EU EN6128 & UAB100-EU EN6129 & UABP-EU MAXIBOLT® PLUS | 5/32<br>3/16 | UBB05-752C-20<br>UAB06-752B-20 | UBB05-752C-45<br>UAB06-752B-45 | UBB05-751B-54RA<br>UAB06-751B-54RA 6 | UBB05-752A-43OS<br>UAB06-752A-43OS | |
| **UNIMATIC® BLIND RIVET (SINGLE ACTION) WITH OR W/OUT DRIVE WASHER** NAS1900 S & U SERIES | 1/8<br>5/32<br>3/16<br>1/4 | SMLS04-752C-20<br>SMLS05-752C-20<br>SMLS06-752B-20<br>SMLS08-713-20 | SMLS04-752C-45<br>SMLS05-752C-45<br>SMLS06-752B-45<br>SMLS08-713-45 | SMLS04-751B-54RA<br>SMLS05-751B-54RA<br>SMLS06-751B-54RA<br>SMLS08-751B-54RA 6 | SMLS04-752A-43OS<br>SMLS05-752A-43OS<br>SMLS06-752A-43OS<br>SMLS08-204D-27OS | |
| **UNIMATIC® BLIND RIVET (SINGLE ACTION) WITH DRIVE WASHER** NAS1900 S & U SERIES | 1/8<br>5/32<br>3/16<br>1/4 | 456UBR-751A-21 2<br>UBR08-713-20 | 456UBR-751A-61 2<br>UBR08-713-45 | 456UBR-751D-54RA 2<br>UBR08-751B-54RA | 456MAX-731-43OS 2<br>UBR08-204D-247OS | UBR08-204D-37OS |
| "A" CODE NAS1398A & NAS1399A | 3/32<br>1/8<br>5/32<br>3/16<br>1/4 | 3A-352B-25<br>4A-752C-20<br>5A-752C-20<br>6A-752B-20<br>SMLS08-713-20 | 4A-752C-45<br>5A-752C-45<br>6A-752B-45 | 3A-751B-54RA<br>4A-751B-54RA<br>5A-751B-54RA<br>6A-751B-54RA | 4A-752A-43OS<br>5A-752A-43OS<br>6A-752A-43OS<br>SMLS08-204D-27OS | |
| CHERRYMAX®, CHERRYMAX® 'AB', MBC® LOCK CREATOR BACR15FR/FP, BACR15GF/GK | 1/8<br>5/32<br>3/16<br>1/4 | 456MAX-751-23 2<br>08MAX-752B-20 | 456MAX-751A-61 2<br>08MAX-752B-45 | 456MAX-751D-54RA 2 | 456MAX-731-43OS 2<br>**08MAX-204D-27OS | **08MAX-204D-37OS |
| *ASP*® ASP 2, ASP PF, ASP 4 FF, ASP 2 F, ASP 2 LC | 13/64<br>17/64 | ASP06-752B-20<br>ASP08-752B-20 | ASP06-752B-45<br>ASP08-752B-45 | ASP06-751B-54RA | ASP06-752A-43OS<br>ASP08-752A-43OS | |
| NAS1719, NAS1720 NAS1721 | 1/8<br>5/32<br>3/16 | MBC04-752C-20<br>MBC05-752C-20<br>MBC06-752B-20 | MBC04-752C-45<br>MBC05-752C-45<br>MBC06-752B-45 | MBC04-751C-54RA<br>MBC05-751C-54RA<br>MBC06-751C-54RA | MBC04-752A-43OS<br>MBC05-752A-43OS<br>MBC06-752A-43OS | |
| GROUND STUD, M83454 & BACS53B 4 | 8/32<br>10/32 | GS8-752B-20<br>GS10-752B-20 | GS8-752B-45<br>GS10-752B-45 | GS8-751B-54RA<br>GS10-752A-54RA | GS8-752A-43OS<br>GS10-752A-43OS | |

*ALL RIGHT ANGLE NOSES REQUIRE 752142 STROKE LIMITER.
**ALL OFFSET 204 SERIES NOSES REQUIRE 751204 ADAPTER.
1) RIGHT ANGLE NOSE ASSEMBLY'S MAY REQUIRE MORE THAN ONE PULL.
2) INSTALLS 1/8, 5/32 & 3/16 DIAMETERS
3) INSTALLS 5/32 & 3/16 DIAMETERS
4) BACS53B -10 ONLY
5) TWO PULLS MAY BE REQUIRED FOR 1/4" DIAMETER MULTI-GRIP LOCKBOLTS
6) THESE NOSES FOR LIGHT DUTY / REPAIR ONLY. CONSULT GAGE BILT FOR HIGH PRODUCTION APPLICATIONS

NOTE: THE LAST 2 DIGITS OF THE NOSE ASSEMBLY REPRESENTS THE LENGTH THE NOSE EXTENDS FROM THE TOOL I.E. -20 = 2.0 INCHES

# Commercial & Aerospace Blind Rivets

## Nietwerkzeuge RIVET TOOLING




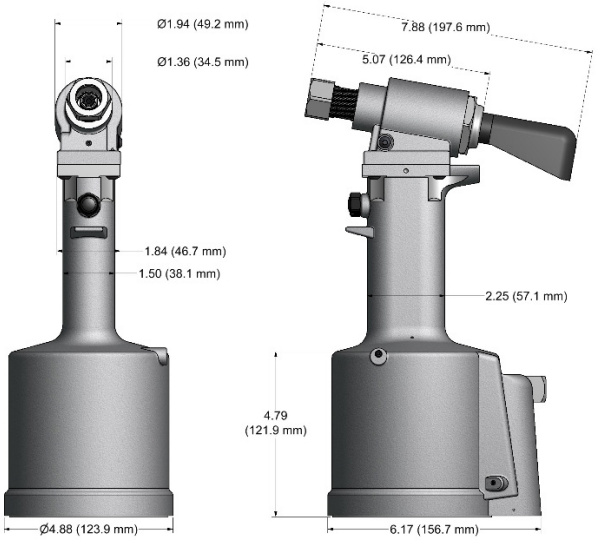


## GB713

**Pneudraulisches Nietgerät**
**PNEUDRAULIC RIVETER**
Accepts 3/4" diameter Gage Bilt & Huck® noses

**SPEZIFIKATIONEN / SPECIFICATIONS**

| | | |
|---|---|---|
| Gewicht | Weight | 6.50 lbs. (2,94 kg) |
| Hub | Setting stroke | **.760" (19,3 mm)** |
| Leistung | Rated Pull load | **4500 lbs. @ 90 psi (20,02 kN @ 6,2 bar)** |

## GB713 - SELECTION CHART

| FASTENER | DIA. | STRAIGHT | | * RIGHT ANGLE | * OFFSET | |
|---|---|---|---|---|---|---|
| C6L® LOCKBOLTS | 3/16<br>1/4 | LB06-722-20<br>LB08-722-20 | LB06-722-60<br>LB08-722-60 | | | |
| MAGNA-GRIP® LOCKBOLTS | 3/16<br>1/4 | MG06-722-20<br>MG08-722-20 | MG06-722-60<br>MG08-722-60 | | | |
| **BLIND BOLT (SINGLE ACTION) WITH OR W/OUT DRIVE WASHER** MS90353S & U / MS90354S & U MS21140S & U / MS21141S & U CR7000 SERIES, BACB30YY, YU, & YT | 1/8<br>5/32<br>3/16<br>1/4 | SB04-752C-20<br>SB05-752C-20<br>SB05-752C-80<br>SB06-752B-20<br>SB06-752B-80<br>SB08-713-20 [3] | SB04-752C-45<br>SB05-752C-45<br>SB06-752B-45<br>SB08-713-45 [3] | SB04-751B-54RA [4]<br>SB05-751B-54RA [4]<br>SB06-751B-54RA [4]<br>SB08-713A-58RA [3] | SB04-752A-43OS<br>SB05-752A-43OS<br>SB06-204D-27OS [3]<br>SB08-204D-27OS [3] | <br><br>SB06-204D-37OS [3]<br>SB08-204D-37OS [3] |
| **BLIND BOLT (SINGLE ACTION) WITH DRIVE WASHER** MS90353S & U / MS90354S & U MS21140S & U / MS21141S & U CR7000 SERIES, BACB30YY, YU, & YT | 1/8<br>5/32<br>3/16<br>1/4 | UBB04-752C-20<br>UBB05-752C-20<br>UBB05-752C-80<br>UBB06-752B-20<br>UBB06-752B-80<br>UBB08-713-20 [3] | UBB04-752C-45<br>UBB05-752C-45<br>UBB06-752B-45<br>UBB08-713-45 [3] | UBB05-751B-54RA<br>UBB04-751B-54RA<br>UBB06-751B-54RA<br>UBB08-713A-58RA [3] | UBB04-752A-43OS<br>UBB05-752A-43OS<br>UBB06-204D-27OS<br>UBB08-204D-27OS [3] | <br><br>UBB06-204D-37OS [3]<br>UBB08-204D-37OS [3] |
| EN6122 & UAB130-EU EN6127 & UAB6127-EU EN6128 & UAB100-EU EN6129 & UABP-EU | 5/32<br>3/16<br>1/4 | UAB568-713-21 [5] | UAB568-713-61 [5] | UAB06-751B-54RA [4] | UAB06-752A-43OS<br>UAB08-204D-27OS | <br>UAB08-204D-37OS |
| **BLIND RIVET (SINGLE ACTION) WITH OR W/OUT DRIVE WASHER** NAS1900 S & U SERIES | 1/8<br>5/32<br>3/16<br>1/4 | SMLS04-752C-20<br>SMLS05-752C-20<br>SMLS06-752B-20<br>SMLS08-713-20 | SMLS04-752C-45<br>SMLS05-752C-45<br>SMLS06-752B-45 | SMLS06-751B-54RA [4]<br>SMLS04-751B-54RA [4]<br>SMLS05-751B-54RA [4]<br>SMLS08-713B-58RA | SMLS04-752A-43OS<br>SMLS05-752A-43OS<br>SMLS06-752A-43OS<br>SMLS08-752A-43OS [2] | |
| "A" CODE NAS1398A & NAS1399A | 3/32<br>1/8<br>5/32<br>3/16<br>1/4 | 3A-352B-25<br>4A-752C-20<br>5A-752C-20<br>6A-752B-20<br>SMLS08-713-20 | 4A-752C-45<br>5A-752C-45<br>6A-752B-45 | 3A-751B-54RA [4]<br>4A-751B-54RA [4]<br>5A-751B-54RA [4]<br>6A-751B-54RA [4] | 4A-752A-43OS<br>5A-752A-43OS<br>6A-752A-43OS<br>SMLS08-204D-27OS | |
| T RIVET® | 3/16<br>1/4 | 6T-352-21<br>8T-352-21 | 6T-352-61<br>8T-352-61 | | | |
| PROTRUDING HEAD, MULTI-GRIP BLIND RIVETS | 3/16<br>1/4 | MGL06-752A-21<br>MGL08-752A-21 | MGL06-752A-61<br>MGL08-752A-61 | MGL08-713B-58RA<br>MGL06-713B-58RA | | |
| MONOBOLT® | 3/16<br>1/4 | MB06-752A-21<br>MB08-752A-21 | MB06-752A-61<br>MB08-752A-61 | | | |
| CHERRYMAX®, CHERRYMAX® 'AB', MBC® LOCK CREATOR BACR15FR/FP, BACR15GF/GK, **NAS1900 S & U SERIES BLIND RIVET WITH DRIVE WASHER** | 1/8<br>5/32<br>3/16<br>1/4 | 456MAX-751A-21 [1]<br>08MAX-752B-20 | 456MAX-751A-61 [1]<br>08MAX-752B-45 | 456MAX-751D-54RA [1,4]<br>08MAX-713A-58RA | 456MAX-731-43OS [1]<br>08MAX-204D-27OS | <br>08MAX-204D-37OS |
| ASP® ASP 2 , ASP PF, ASP 4 FF, ASP 2 F, ASP 2 LC | 13/64<br>17/64<br>21/64 | ASP06-752B-20<br>ASP08-752B-20<br>ASP10-713-20 | ASP06-752B-45<br>ASP08-752B-45<br>ASP10-713-45 | ASP06-751B-54RA [4] | ASP06-752A-43OS<br>ASP08-752A-43OS<br>ASP10-204D-27OS | <br><br>ASP10-204D-37OS |
| NAS1719 NAS1720 NAS1721 | 1/8<br>5/32<br>3/16 | MBC04-752C-20<br>MBC05-752C-20<br>MBC06-752B-20 | MBC04-752C-45<br>MBC05-752C-45<br>MBC06-752B-45 | MBC04-751A-54RA [4]<br>MBC05-751A-54RA [4]<br>MBC06-751A-54RA [4] | MBC04-752A-43OS<br>MBC05-752A-43OS<br>MBC06-752A-43OS | |
| GROUND STUD, M83454, BACS53B | 8/32<br>10/32 | GS8-752C-20<br>GS10-752C-20 | GS8-752C-45<br>GS10-752C-45 | GS8-751B-54RA [4]<br>GS10-752A-54RA [4] | GS8-752A-43OS<br>GS10-752A-43OS | |

*ALL OFFSET 204 SERIES NOSES REQUIRE 751204 ADAPTER & 713152 STROKE LIMITER.
1) INSTALLS 1/8", 5/32" AND 3/16" DIAMETERS.
2) ALUMINUM ONLY.
3) 105 P.S.I. REQUIRED FOR MS90353 & MS90354.
4) THESE NOSES REQUIRE 713153 STROKE LIMITER.
5) INSTALLS 5/32", 3/16", AND 1/4"

NOTE:

THE LAST2DIGITS OF THE NOSE ASSEMBLY REPRESENTS THE LENGTH THE NOSE EXTENDS FROM THE TOOL I.E. -20 = 2.0 INCHES

# Commercial & Aerospace Blind Rivets

# Nietwerkzeuge RIVET TOOLING



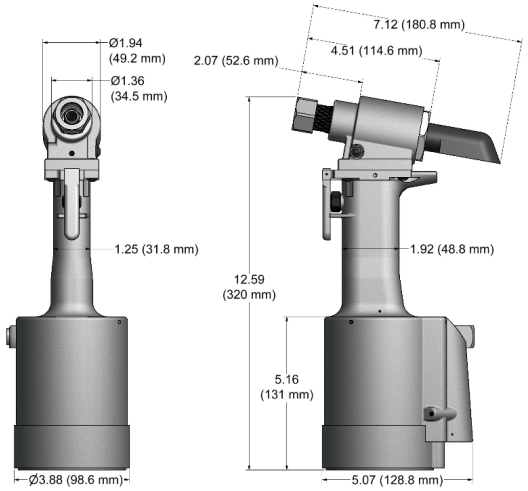


## GB722

**Pneudraulisches Nietgerät**
**PNEUDRAULIC RIVETER**
Accepts 3/4" diameter Gage Bilt & Huck® noses

**SPEZIFIKATIONEN / SPECIFICATIONS**

| | | |
|---|---|---|
| Gewicht | Weight | 5.50 lbs. (2,49 kg) |
| Hub | Setting stroke | **.590" (14,9 mm)** |
| Leistung | Rated Pull load | **4700 lbs @ 90 psi (20,91 kN @ 6,2 bar)** |

## GB722 - SELECTION CHART

| FASTENER | DIA | STRAIGHT | | *RIGHT ANGLE 2 | **OFFSET | |
|---|---|---|---|---|---|---|
| C6L® LOCKBOLTS | 3/16 | LB06-722-20 | LB06-722-60 | | | |
| | 1/4 | LB08-722-20 | LB08-722-60 | | | |
| MAGNA-GRIP® LOCKBOLTS | 3/16 | MG06-722-20 | MG06-722-60 | | | |
| MULIT-GRIP | 1/4 | MG08-722-20 | MG08-722-60 | | | |
| PROTRUDING HEAD, | 3/16 | MGL06-752A-21 | MGL06-752A-61 | MGL06-713B-58RA | | |
| MAGNA-LOK® BLIND RIVETS | 1/4 | MGL08-752A-21 | MGL08-752A-61 | MGL08-713B-58RA | | |
| COUNTERSUNK HEAD, | 3/16 | MGLC06-752A-21 | MGLC06-752A-61 | | | |
| MAGNA-LOK® BLIND RIVETS | 1/4 | MGLC08-752A-21 | MGLC08-752A-61 | | | |
| **BLIND BOLT (SINGLE ACTION)** | 1/8 | SB04-752C-20 | SB04-752C-45 | SB04-751B-54RA | SB05-752A-43OS | |
| **WITH OR W/OUT DRIVE WASHER** | 5/32 | SB05-752C-20 | SB05-752C-45 | SB05-751B-54RA | SB05-752A-43OS | |
| MS90353S & U / MS90354S & U | | SB05-752C-80 | | | | |
| MS21140S & U / MS21141S & U | 3/16 | SB06-752B-20 | SB06-752B-45 | SB06-751B-54RA 5 | SB06-204D-27OS | |
| MAXIBOLT®, BACB30YY, YU, & YT | | SB06-752B-80 | | | | |
| | 1/4 4 | SB08-713-20 4 | SB08-713-45 4 | | SB08-204D-27OS 4 | SB08-204D-37OS 4 |
| **BLIND BOLT (SINGLE ACTION)** | 1/8 | UBB04-752C-20 | UBB04-752C-45 | UBB04-751B-54RA | UBB04-752A-43OS | |
| **WITH DRIVE WASHER** | 5/32 | UBB05-752C-20 | UBB05-752C-45 | UBB05-751B-54RA | UBB05-752A-43OS | |
| MS90353S & U / MS90354S & U | | UBB05-752C-80 | | | | |
| MS21140S & U / MS21141S & U | 3/16 | UBB06-752B-20 | UBB06-752B-45 | UBB06-751B-54RA | UBB06-204D-27OS | |
| MAXIBOLT®, BACB30YY, YU, & YT | | UBB06-752B-80 | | | | |
| | 1/4 4 | UBB08-713-20 | UBB08-713-45 | | UBB08-204D-27OS 4 | UBB08-204D-37OS 4 |
| EN6122 & UAB130-EU | 1/8 | UAB04-752B-20 | UAB04-752B-45 | UAB04-751B-54RA | UAB04-752A-43OS | |
| EN6127 & UAB6127-EU | 5/32 | | | UBB05-751B-54RA | UBB05-752A-43OS | |
| EN6128 & UAB100-EU | 3/16 | UAB568-713-21 3 | UAB568-713-61 3 | UAB06-751B-54RA 5 | UAB06-752A-43OS | |
| EN6129 & UABP-EU | 1/4 | | | | UAB08-204D-27OS | UAB08-204D-37OS |
| **UNIMATIC® BLIND RIVET** | 1/8 | SMLS04-752C-20 | SMLS04-752C-45 | SMLS04-751B-54RA | SMLS04-752A-43OS | |
| **(SINGLE ACTION)** | 5/32 | SMLS05-752C-20 | SMLS05-752C-45 | SMLS05-751B-54RA | SMLS05-752A-43OS | |
| **WITH OR W/OUT DRIVE WASHER** | 3/16 | SMLS06-752B-20 | SMLS06-752B-45 | SMLS06-751B-54RA | SMLS06-752A-43OS | |
| NAS1900 S & U SERIES | 1/4 | SMLS08-713-20 | SMLS08-713-45 | SMLS08-751B-54RA 5 | SMLS08-204D-27OS | SMLS08-204D-37OS |
| **UNIMATIC® BLIND RIVET** | 1/8 | | | | | |
| **(SINGLE ACTION)** | 5/32 | 456UBR-751A-21 1 | 456UBR-751A-61 1 | 456UBR-751D-54RA 1 | 456MAX-731-43OS 1 | |
| **WITH DRIVE WASHER** | 3/16 | | | | | |
| NAS1900 S & U SERIES | 1/4 | UBR08-713-20 | UBR08-713-45 | UBR08-751B-54RA | UBR08-204D-27OS | UBR08-204D-37OS |
| | 3/32 | 3A-352B-25 | | 3A-751B-54RA | | |
| "A" CODE | 1/8 | 4A-752C-20 | 4A-752C-45 | 4A-751B-54RA | 4A-752A-43OS | |
| NAS1398A & NAS1399A | 5/32 | 5A-752C-20 | 5A-752C-45 | 5A-751B-54RA | 5A-752A-43OS | |
| | 3/16 | 6A-752B-20 | 6A-752B-45 | 6A-751B-54RA | 6A-752A-43OS | |
| | 1/4 | SMLS08-713-20 | SMLS08-713-45 | SMLS08-751B-54RA 5 | SMLS08-204D-27OS | SMLS08-204D-37OS |
| MONOBOLT® | 3/16 | MB06-752A-21 6 | MB06-752A-61 6 | MB06-751B-54RA 6 | | |
| | 1/4 | MB08-752A-21 6 | MB08-752A-61 6 | MB08-713-58RA 6 | | |
| BACR15FR/FP, BACR15GF/GK | 1/8 | 456MAX-751A-21 1 | 456MAX-751A-61 1 | 456MAX-751C-54RA 1 | 456MAX-731-43OS 1 | |
| NAS1919 & NAS1921 | 5/32 | | | | | |
| **"U" TYPE BLIND RIVET** | 3/16 | | | | | |
| **WITH DRIVE WASHER** | 1/4 | 08MAX-752B-20 | 08MAX-752B-45 | 08MAX-713-58RA | 08MAX-204D-27OS | 08MAX-204D-37OS |
| NAS9301-9312 | | | | | | |
| ASP® | 13/64 | ASP06-752B-20 | ASP06-752B-45 | ASP06-751B-54RA | ASP06-752A-43OS | |
| ASP 2, ASP PF, ASP 4 FF | 17/64 | ASP08-752B-20 | ASP08-752B-45 | ASP08-751B-54RA | ASP08-752A-43OS | |
| ASP 2 F, ASP 2 LC | 21/64 | ASP10-713-20 | ASP10-713-45 | | ASP10-204D-27OS | ASP10-204D-37OS |
| NAS1719, NAS1720 | 1/8 | MBC04-752C-20 | MBC04-752C-45 | MBC04-751C-54RA | MBC04-752A-43OS | |
| NAS1721 | 5/32 | MBC05-752C-20 | MBC05-752C-45 | MBC05-751C-54RA | MBC05-752A-43OS | |
| | 3/16 | MBC06-752B-20 | MBC06-752B-45 | MBC06-751C-54RA | MBC06-752A-43OS | |
| GROUND STUD | 8/32 | GS8-752C-20 | GS8-752C-45 | GS8-751B-54RA | GS8-752A-43OS | |
| M83454 & BACS53B | 10/32 | GS10-752B-20 | GS10-752B-45 | GS10-752A-54RA | GS10-752A-43OS | |

*ALL RIGHT ANGLE NOSE ASSEMBLIES REQUIRE 722142 STROKE LIMITER.
**ALL OFFSET 204 SERIES NOSES REQUIRE 751204 ADAPTER.
1) INSTALLS 1/8 5/32 & 3/16 DIAMETERS
2) RIGHT ANGLE NOSE ASSEMBLIES MAY REQUIRE MORE THAN ONE PULL.
3) INSTALLS 5/32, 3/16 & 1/4 DIAMETERS.
4) 105 PSI REQUIRED FOR ALLOY STEEL.
5) THESE NOSES FOR LIGHT DUTY / REPAIR ONLY.
6) 2 PULLS REQUIRED FOR MOST APPLICATIONS.

NOTE: THE LAST 2 DIGITS OF THE NOSE ASSEMBLY REPRESENTS THE LENGTH THE NOSE EXTENDS FROM THE TOOL I.E. -20 = 2.0 INCHES

# Lockbolts
## Blind Rivets & Blind Bolts

# Nietwerkzeuge
## RIVET TOOLING




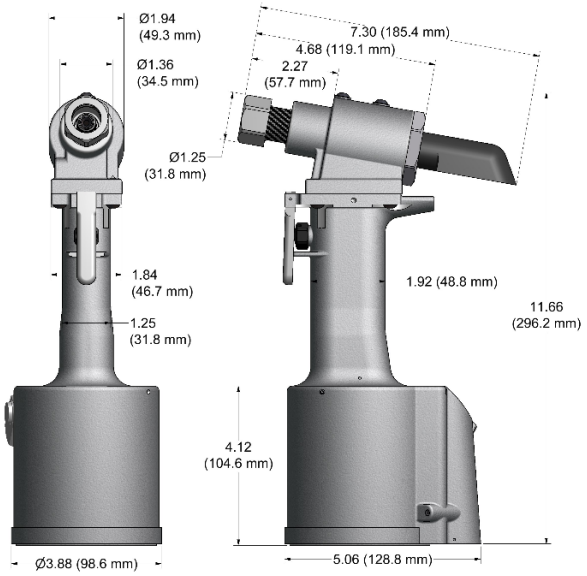


## GB730

**Pneudraulisches Nietgerät**
**PNEUDRAULIC RIVETER**
Accepts 3/4" diameter Gage Bilt and Huck® noses

**SPEZIFIKATIONEN / SPECIFICATIONS**

| | | |
|---|---|---|
| Gewicht | Weight | 4.70 lbs. (2,13 kg) |
| Hub | Setting stroke | **.500" (12.7 mm)** |
| Leistung | Rated Pull load | **4000 lbs @ 90 psi (17,8 kN @ 6,2 bar)** |

## GB730 - SELECTION CHART

| FASTENER | DIA | STRAIGHT | | RIGHT ANGLE 1 | * OFFSET | |
|---|---|---|---|---|---|---|
| 'A' CODE<br>NAS1 398 & NAS1 399 'A' | 3/32 | 3A-352B-25 | | 3A-751B-54RA | | |
| | 1/8 | 4A-752C-20 | 4A-752C-45 | 4A-751B-54RA | 4A-752A-43OS | |
| | 5/32 | 5A-752C-20 | 5A-752C-45 | 5A-751B-54RA | 5A-752A-43OS | |
| | 3/16 | 6A-752C-20 | 6A-752C-45 | 6A-751B-54RA | 6A-752A-43OS | |
| | 1/4 | SMLS08-713-20 | | | SMLS08-752A-43OS 3 | |
| ASP®<br>2 ASP & ASP PF<br>ASP FF & ASP F<br>ASP-LC & MA F | 13/64 | ASP06-752B-20 | ASP06-752B-45 | ASP06-751B-54RA | ASP06-752A-43OS | |
| | 17/64 | ASP08-752B-20 | ASP08-752B-45 | ASP08-751B-54RA | ASP08-752A-43OS | |
| COMMERCIAL LOCKBOLTS<br>C6L® & AVDELOK® | 3/16 | LB06-722-20 | | | NAS06-204C-25OS | NAS06-204C-34OS |
| | 1/4 | LB08-722-20 | | | NAS08-204C-25OS | NAS08-204C-34OS |
| LGP® LOCKBOLT<br>LGPL2SC-V BACB30VM<br>LGPL18SC-V BACB30XT<br>LGPL4SC-V ABS0548<br>LGP2SP-V BACB30VN<br>LGPL4SP-V ASNA2392<br>LGPL8SC-V BACB30WD<br>LGPL9SC-V BACB30WB<br>LGPL9SP-V BACB30VY | 5/32 | LGP05-2480-10 | LGP05-2480-20 | | LGP05-204C-25OS | LGP05-204C-30OS |
| | | LGP05-2480-45 | | | LGP05-204C-34OS | |
| | 3/16 | LGP06-2480-10 | LGP06-2480-20 | | LGP06-204C-25OS | LGP06-204C-30OS |
| | | LGP06-2480-45 | | | LGP06-204C-34OS | |
| | 7/32 | LGP07-31-10 | LGP07-31-20 | | LGP07-204C-25OS | LGP07-204C-30OS |
| | | LGP07-31-45 | | | LGP07-204C-34OS | |
| NAS and GP SHEAR/TENSION LOCKBOLTS<br>BACB30TY BACB30UA<br>BACB30TZ BACB30UB<br>BACB30DY BACB30GX<br>BACB30DX BACB30GP<br>BACB30GO BACB30GY<br>BACB30GW | 5/32 | NASS05-2480-10 | NAST05-2480-10 | | NASS05-204C-25OS | NAST05-204C-20OS |
| | | NASS05-2480-20 | NAST05-2480-20 | | NASS05-204C-30OS | NAST05-204C-30OS |
| | | NASS05-2480-45 | NAST05-2480-45 | | NASS05-204C-34OS | NAST05-204C-34OS |
| | 3/16 | NAS06-2480-10 | NAS06-2480-20 | | NAS06-204C-25OS | NAS06-204C-30OS |
| | | NAS06-2480-45 | | | NAS06-204C-34OS | |
| CHERRYMAX®, CHERRYMAX 'AB',<br>MBC® LOCK CREATOR<br>BACR15FR/FP, BACR15GF/GK,<br>**NAS1900 S & U SERIES BLIND RIVET WITH DRIVE WASHER** | 1/8<br>5/32<br>3/16 | 456MAX-751-21 2 | 456MAX-751A-61 2 | 456MAX-751D-54RA 2 | 456MAX-731-43OS | |
| | 1/4 | 08MAX-752B-20 | 08MAX-752B-45 | 08MAX-713A-58RA | 08MAX-204D-27OS | 08MAX-204D-37OS |
| **BLIND BOLT (SINGLE ACTION) WITH OR W/OUT DRIVE WASHER**<br>MS90353S & U / MS90354S & U<br>MS21140S & U / MS21141S & U<br>MAXI-BOLT®, BACB30YY, YU, & YT | 1/8 | SMLS04-752C-20 | SMLS04-752C-45 | | | |
| | 5/32 | SB05-752C-20 | SB05-752C-45 | SB05-751B-54RA | SB05-752A-43OS | |
| | | SB05-752C-80 | | | | |
| | 3/16 | SB06-752B-20 | SB06-752B-45 | SB06-751B-54RA | SB06-204D-27OS | |
| | | SB06-752B-80 | | | | |
| EN6122 & UAB130-EU<br>EN6127 & UAB6127-EU<br>EN6128 & UAB100-EU<br>EN6129 & UABP-EU | 1/8 | | | UAB04-751B-54RA | UAB04-752A-43OS | |
| | 5/32 | UAB568-713-21 4 | UAB568-713-61 4 | | | |
| | 3/16 | | | UBB06-751B-54RA | UBB06-752A-43OS | |
| | 1/4 | | | | | |
| **BLIND RIVET (SINGLE ACTION) WITH OR W/OUT DRIVE WASHER**<br>NAS1900 S & U SERIES | 1/8 | SMLS04-752C-20 | SMLS04-752C-45 | SMLS04-751B-54RA | SMLS04-752A-43OS | |
| | 5/32 | SMLS05-752C-20 | SMLS05-752C-45 | SMLS05-751B-54RA | SMLS05-752A-43OS | |
| | 3/16 | SMLS06-752B-20 | SMLS06-752B-45 | SMLS06-751B-54RA | SMLS06-752A-43OS | |
| | 1/4 | SMLS08-713-20 | | SMLS08-713A-58RA | SMLS08-752A-43OS 3 | |

*ALL RIGHT ANGLE NOSES REQUIRE 730157 STROKE LIMITER EXCEPT -58RA.
*ALL OFFSET 204 SERIES NOSES REQUIRE 751204 ADAPTER.
1) RIGHT ANGLE NOSE ASSEMBLY'S MAY REQUIRE MORE THAN ONE PULL.
2) INSTALLS 1/8, 5/32 & 3/16 DIAMETERS
3) ALUMINUM ONLY
4) INSTALLS 5/32, 3/16, & 1/4 DIAMETERS

NOTE: THE LAST 2 DIGITS OF THE NOSE ASSEMBLY REPRESENTS THE LENGTH THE NOSE EXTENDS FROM THE TOOL I.E. -20 = 2.0 INCHES

# Lockbolts
## Blind Rivets & Blind Bolts

# Nietwerkzeuge
## RIVET TOOLING



## GB731

**Pneudraulisches Nietgerät**
**PNEUDRAULIC RIVETER**
Accepts diameter 3/4" Gage Bilt & Huck® noses

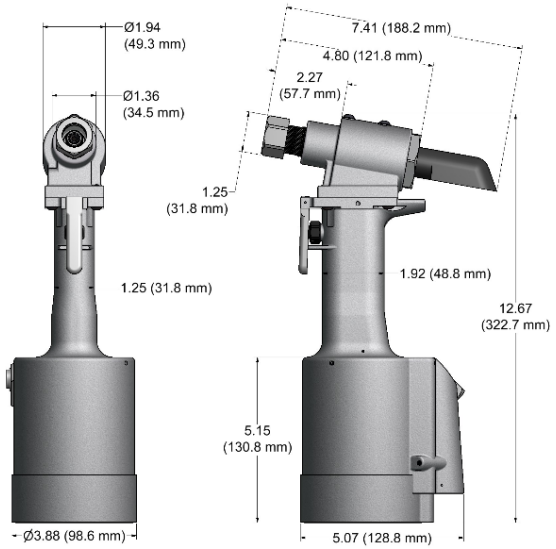


**SPEZIFIKATIONEN / SPECIFICATIONS**

| | | |
|---|---|---|
| Gewicht | Weight | 5.75 lbs. (2,6 kg) |
| Hub | Setting stroke | **.600" (15,2 mm)** |
| Leistung | Rated Pull load | **4800 lbs @ 90 psi (21,36 kN @ 6,2 bar)** |

## GB731 - SELECTION CHART

| FASTENER | DIA | STRAIGHT | | * RIGHT ANGLE 1 | ** OFFSET | |
|---|---|---|---|---|---|---|
| 'A' CODE<br>NAS1398 & NAS1399 'A' | 3/32 | 3A-352B-25 | | 3A-751B-54RA 5 | | |
| | 1/8 | 4A-752C-20 | 4A-752C-45 | 4A-751B-54RA 5 | 4A-752A-43OS | |
| | 5/32 | 5A-752C-20 | 5A-752C-45 | 5A-751B-54RA 5 | 5A-752A-43OS | |
| | 3/16 | 6A-752C-20 | 6A-752C-45 | 6A-751B-54RA 5 | 6A-752A-43OS | |
| | 1/4 | SMLS08-713-20 | SMLS08-713-45 | | SMLS08-752A-43OS | |
| ASP®<br>2 ASP & ASP PF<br>ASP FF & ASP F<br>ASP-LC & MAF | 13/64 | ASP06-752C-20 | ASP06-752C-45 | ASP06-751B-54RA 5 | ASP06-752A-43OS | |
| | 17/64 | ASP08-752B-20 | ASP08-752B-45 | ASP08-751B-54RA 5 | ASP08-752A-43OS | |
| LGP® LOCKBOLT | | | | | | |
| LGPL2SC-V BACB30VM | 5/32 | LGP05-2480-10 | LGP05-2480-20 | | LGP05-204C-25OS | LGP05-204C-30OS |
| LGPL18SC-V BACB30XT | | LGP05-2480-45 | | | LGP05-204C-34OS | |
| LGPL4SC-V ABS0548 | 3/16 | LGP06-2480-10 | LGP06-2480-20 | | LGP06-204C-25OS | LGP06-204C-30OS |
| LGPL2SP-V BACB30VN | | LGP06-2480-45 | | | LGP06-204C-34OS | |
| LGPL4SP-V ASNA2392 | 7/32 | LGP07-731-10 | LGP07-731-20 | | LGP07-204C-25OS | |
| LGPL8SC-V BACB30WD | | LGP07-731-45 | | | LGP07-204C-30OS | |
| LGPL9SC-V BACB30WB | 1/4 | LGP08-2480-10 | LGP082480-20 | | LGP08-204C-25OS | LGP08-204D-30OS |
| LGPL9SP-V BACB30VY | | LGP08-2480-45 | | | LGP08-204C-34OS | |
| NAS and GP® SHEAR/TENSION LOCKBOLTS | 5/32 | NASS05-730B-10 | NAST05-730B-10 | | NASS05-204C-25OS | NAST05-204C-25OS |
| | | NASS05-731-20 | NAST05-731-20 | | NASS05-204C-30OS | NAST05-204C-30OS |
| BACB30TY BACB30UA | | NASS05-731-45 | NAST05-731-45 | | NASS05-204C-34OS | NAST05-204C-34OS |
| BACB30TZ BACB30UB | 3/16 | NAS06-730B-10 | NAS06-731-20 | | NAS06-204C-25OS | NAS06-204D-30OS |
| BACB30DY BACB30GX | | NAS06-731-45 | | | NAS06-204C-34OS | |
| BACB30DX BACB30GP | 1/4 3 | NAS08-730-10 | NAS08-731-20 | | NAS08-204C-25OS | NAS08-204D-30OS |
| BACB30GO BACB3GY BACB30GW | | NAS08-731-45 | | | NAS08-204C-34OS | |
| CHERRYMAX®,<br>CHERRYMAX® 'AB',<br>MBC® LOCK CREATOR<br>BACR15FR/FP, BACR15GF/GK,<br>NAS1900 S & U SERIES BLIND<br>RIVET **WITH DRIVE WASHER** | 1/8<br>5/32<br>3/16<br>1/4 | 456MAX-751-23 2<br><br><br>08MAX-752B-20 | 456MAX-751A-61 2<br><br><br>8MAX-752B-45 | 456MAX-751D-54RA 2,5<br><br><br>08MAX-713A-58RA 5 | 456MAX-731-43OS 2<br><br><br>08MAX-204D-27OS | <br><br><br>08MAX-204D-37OS |
| **BLIND BOLT (SINGLE ACTION)**<br>**WITH OR W/OUT DRIVE WASHER**<br>MS90353S & U / MS90354S & U<br>MS21140S & U / MS21141S & U<br>CR7000 SERIES,<br>BACB30YY, YU, & YT | 1/8 | SMLS04-752C-20 | SMLS04-752C-45 | | | |
| | 5/32 | SB05-752C-20 | SB05-752C-45 | SB05-751B-54RA 5 | SB05-752A-43OS | |
| | | SB05-752C-80 | | | | |
| | 3/16 | SB06-752B-20 | SB06-752B-45 | SB06-751B-54RA 5 | SB06-204D-27OS | |
| | | SB06-752B-80 | | | | |
| | 1/4 | SB08-713-20 6 | SB08-713-45 6 | SB08-713A-58RA 6 | SB08-204D-27OS 6 | SB08-204D-37OS 6 |
| EN6122 & UAB130-EU<br>EN6127 & UAB6127-EU<br>EN6128 & UAB100-EU<br>EN6129 & UABP-EU | 1/8 | | | | UAB04-752A-43OS | |
| | 5/32 | UAB568-713-21 4 | UAB568-713-61 4 | | | |
| | 3/16 | | | UAB06-751B-54RA 5 | UAB06-752A-43OS | |
| | 1/4 | | | | UAB08-204D-27OS | UAB08-204D-37OS |
| **BLIND RIVET (SINGLE ACTION)**<br>**WITH OR W/OUT DRIVEWASHER**<br>NAS1900 S & U SERIES | 1/8 | SMLS04-752C-20 | SMLS04-752C-45 | SMLS04-751B-54RA 5 | SMLS04-752A-43OS | |
| | 5/32 | SMLS05-752C-20 | SMLS05-752C-45 | SMLS05-751C-54RA 5 | SMLS05-752A-43OS | |
| | 3/16 | SMLS06-752B-20 | SMLS06-752B-45 | SMLS06-751C-54RA 5 | SMLS06-752A-43OS | |
| | 1/4 | SMLS08-713-20 | SMLS08-713-45 | SMLS08-713B-58RA | SMLS08-752A-43OS | |

**ALL OFFSET 204 SERIES NOSES REQUIRE 751204 ADAPTER.
1) RIGHT ANGLE NOSE ASSEMBLIES MAY REQUIRE MORE THAN ONE PULL.
2) INSTALLS 1/8, 5/32 & 3/16 DIAMETERS.
3) NOT FOR TENSION ALLOY
4) INSTALLS 5/32, 3/16 & 1/4 DIAMETERS.
5) RIGHT ANGLE NOSE REQUIRES 731154 STROKE LIMITER.
6) 105 P.S.I. REQUIRED FOR MS90353 & MS90354

NOTE: THE LAST 2 DIGITS OF THE NOSE ASSEMBLY REPRESENTS THE LENGTH THE NOSE EXTENDS FROM THE TOOL I.E. -20 = 2.0 INCHES

# Lockbolts
## Blind Rivets & Blind Bolts

# Nietwerkzeuge
## RIVET TOOLING



# GB731OS

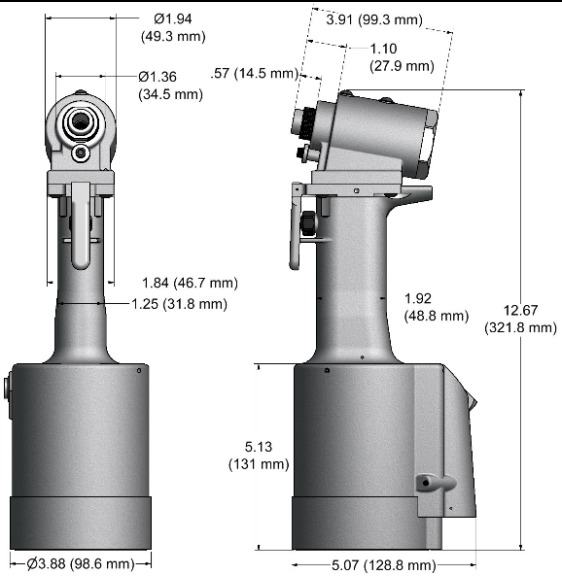


**Pneudraulisches Nietgerät**
**PNEUDRAULIC RIVETER**
Accepts offset Gage Bilt 204 style noses
*Nose Assembly sold separately !*
*Zugköpfe gehören nicht zum Lieferumfang !*

**SPEZIFIKATIONEN / SPECIFICATIONS**

| | | |
|---|---|---|
| Gewicht | Weight | 5.7 lbs. (2,58 kg) |
| Hub | Setting stroke | **.600" (15,2 mm)** |
| Leistung | Rated Pull load | **4800 lbs @ 90 psi (21,36 kN @ 6,2 bar)** |

## GB731OS - SELECTION CHART

| FASTENER | DIA. | STANDARD | STRADDLE NOES (1) | LONG |
|---|---|---|---|---|
| LOCKBOLT,<br>NAS SHEAR PULL TYPE,<br>NAS TENSION PULL TYPE,<br>NASS = SHEAR & GP<br>NAST = TENSION | 5/32"<br><br>3/16"<br><br>1/4" | NAST05-204C-25OS<br>NASS05-204C-25OS<br>NAS06-204C-25OS<br><br>NAS08-204C-25OS | NAST05-204C-30OS<br>NASS05-204C-30OS<br>NAS06-204D-30OS<br><br>NAS08-204D-30OS | NAST05-204C-34OS<br>NASS05-204C-34OS<br>NAS06-204C-34OS<br><br>NAS08-204C-34OS |
| MGP® | 4 mm<br>5 mm | MGP4-204C-25OS<br>MGP5-204C-25OS | MGP4-204C-30OS<br>MGP5-204C-30OS | MGP4-204C-34OS<br>MGP5-204C-34OS |
| LGP®<br>**L**ightweight **G**roove **P**roportion<br>LOCKBOLT | 5/32"<br>3/16"<br>7/32"<br>1/4" | LGP05-204C-25OS<br>LGP06-204C-25OS<br>LGP07-204C-25OS<br>LGP08-204C-25OS | LGP05-204C-30OS<br>LGP06-204C-30OS<br>LGP07-204C-30OS<br>LGP08-204D-30OS | LGP05-204C-34OS<br>LGP06-204C-34OS<br>LGP07-204C-34OS<br>LGP08-204C-34OS |
| MLGP® | 4 mm<br>5 mm | MLGP4-204C-25OS<br>MLGP5-204C-25OS | MLGP4-204C-30OS<br>MLGP5-204C-30OS | MLGP4-204C-34OS<br>MLGP5-204C-34OS |
| **BLIND RIVET (SINGLE ACTION)**<br>**WITH OR W/OUT DRIVE WASHER**<br>NAS1900 S & U SERIES | 1/8"<br>5/32"<br>3/16"<br>1/4" | SMLS04-204D-27OS<br>SMLS05-204D-27OS<br>SMLS06-204D-27OS<br>SMLS08-204D-27OS | | SMLS04-204D-37OS<br>SMLS05-204D-37OS<br>SMLS06-204D-37OS<br>SMLS08-204D-37OS |
| **BLIND BOLT (SINGLE ACTION)**<br>**WITH OR W/OUT DRIVE WASHER**<br>MS90353S & U / MS90354S & U<br>MS21140S & U / MS21141S & U<br>CR7000 SERIES,<br>BACB30YY, YU, & YT | 5/32"<br><br>3/16"<br><br>1/4" | SB05-204D-27OS<br><br>SB06-204D-27OS<br><br>SB08-204D-27OS | | SB05-204D-37OS<br><br>SB06-204D-37OS<br><br>SB08-204D-37OS |
| EN6122 & UAB130-EU<br>EN6127 & UAB6127-EU<br>EN6128 & UAB100-EU<br>EN6129 & UABP-EU | 3/16"<br><br>1/4" | UAB06-204D-27OS<br><br>UAB08-204D-27OS | | UAB06-204D-37OS<br><br>UAB08-204D-37OS |
| BACR15FR/FP, BACR15GF/GK,<br>**NAS1900 S & U SERIES**<br>**BLIND RIVET WITH DRIVE WASHER**<br>NAS9301-9312 | 1/4" | 08MAX-204D-27OS | | 08MAX-204D-37OS |
| "A" CODE<br>NAS1398A & NAS1399A | 1/8"<br>5/32"<br>3/16"<br>1/4" | 4A-204D-27OS<br>5A-204D-27OS<br>6A-204D-27OS<br>SMLS08-204D-27OS | | 4A-204D-37OS<br>5A-204D-37OS<br>6A-204D-37OS<br>SMLS08-204D-37OS |
| ASP® 2, ASP PF, ASP 4 FF,<br>ASP 2 F, ASP 2 LC | 13/64"<br>17/64"<br>21/64" | ASP06-204D-27OS<br>ASP08-204D-27OS<br>ASP10-204D-27OS | | ASP06-204D-37OS<br>ASP08-204D-37OS<br>ASP10-204D-37OS |
| NAS1719, NAS1720,<br>NAS1721 & MBC | 1/8"<br>5/32"<br>3/16" | MBC04-204D-27OS<br>MBC05-204D-27OS<br>MBC06-204D-27OS | | MBC04-204D-37OS<br>MBC05-204D-37OS<br>MBC06-204D-37OS |
| GROUND STUD,<br>BACS53B 2 | 13/64"<br>17/64" | GS8-204D-32OS<br>GS10-204D-32OS | | GS8-204D-42OS<br>GS10-204D-42OS |

1) -30 STRADDLE NOSES ARE DESIGNED TO REACH OVER THE COLLAR
2) BACS53B -10 ONLY
NOTE: THE LAST 2 DIGITS OF THE NOSE ASSEMBLY REPRESENTS THE LENGTH THE NOSE EXTENDS FROM THE TOOL I.E. -20 = 2.0 INCHES

# Lockbolts
## Blind Rivets & Blind Bolts

# Nietwerkzeuge
## RIVET TOOLING



## GB745

**Pneudraulisches Nietgerät**
**PNEUDRAULIC RIVETER**
Accepts 1.1/16" diameter Gage Bilt & Huck® noses

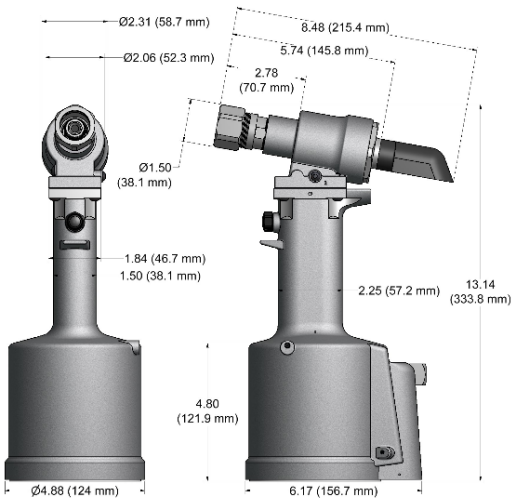


**SPEZIFIKATIONEN**
**SPECIFICATIONS**

| | |
|---|---|
| Weight<br>Gewicht | 7.20 lbs.<br>3,26 kg |
| Setting stroke<br>Hub | **.620"**<br>**15,75 mm** |
| Rated Pull load<br>Leistung | **6300 lbs @ 90 psi**<br>**28,03 kN @ 6,2 bar** |

## GB745 - SELECTION CHART

| FASTENER | DIA | STRAIGHT | | * OFFSET | |
|---|---|---|---|---|---|
| A' CODE<br>NAS1395 & NAS1399 'A' | 1/8<br>5/32<br>3/16<br>1/4 | 4A-745C-23<br>5A-745C-23<br>6A-745B-23<br>SMLS08-755-23 | 4A-745C-48<br>5A-745C-48<br>6A-745B-48<br>SMLS08-755-48 | 4A-752A-43OS 6<br>5A-752A-43OS 6<br>6A-752A-43OS 6<br>SMLS08-204D-27OS | |
| 2 ASP & ASP PF<br>ASP FF & ASP F<br>ASP-LC & MAF | 13/64<br>17/64<br>21/64 | ASP06-745B-23<br>ASP08-745B-23<br>ASP10-755-23 | ASP06-745C-48<br>ASP08-745C-48<br>ASP10-755-48 | ASP06-752A-43OS 6<br>ASP08-752A-43OS 6<br>ASP10-204D-37OS | |
| BOM & AVBOLT | 1/4 | BOM08-755-23 | | | |
| COMMERCIAL LOCKBOLTS<br>C6L<br>ADVELOK | 3/16<br><br><br>1/4<br><br><br>5/16 1<br>3/8 3 | NAS06-745B-12<br>NAS06-755-23<br><br>NAS08-745B-12<br>NAS08-755-23<br>LB10-745C-26<br>LB12-756-26 | <br>NAS06-755-48<br><br><br>NAS08-755-48<br>NAS10-756-48<br>NAS12-756-48 | NAS06-204C-25OS<br>NAS06-204C-34OS<br><br>NAS08-204C-25OS<br>NAS08-205A-31<br>NAS10-205C-31<br>NAS12-205A-31 | NAS06-204D-30OS<br><br><br>NAS08-204D-30OS<br>NAS08-204C-34OS |
| LGP LOCKBOLT<br><br>LGPL2SC-V BACB30VM<br>LGPL18SC-V BACB30XT<br>LGPL4SC-V ABS0548<br>LGPL2SP-V BACB30VN<br>LGPL4SP-V ASNA2392<br>LGPL8SC-V BACB30WD<br>LGPL9SC-V BACB30WB<br>LGPL9SP-V BACB30VY | 5/32<br><br>3/16<br><br>7/32<br><br>1/4<br><br>5/16 | LGP05-2581-12<br>LGP05-2581-23<br>LGP06-2581-12<br>LGP06-2581-23<br>LGP07-745B-12<br>LGP07-755-23<br>LGP08-2581-12<br>LGP08-2581-23<br>LGP10-745B-12<br>LGP10-2581-23 | <br>LGP05-2581-48<br><br>LGP06-2581-48<br><br>LGP07-755-48<br><br>LGP08-2581-48<br><br>LGP10-2581-48 | LGP05-204C-25OS<br>LGP05-204C-34OS<br>LGP06-204C-25OS<br>LGP06-204C-34OS<br>LGP07-204C-25OS<br>LGP07-204C-34OS<br>LGP08-204C-25OS<br>LGP08-204C-34OS<br><br>LGP10-205A-31 | LGP05-204C-30OS<br><br>LGP06-204C-30OS<br><br>LGP07-204C-30OS<br><br>LGP08-204D-30OS<br>LGP08-205A-31 |
| NAS and GP SHEAR/TENSION<br>LOCKBOLTS<br><br>BACB30TY BACB30UA<br>BACB30TZ BACB30UB<br>BACB30DY BACB30GX<br>BACB30DX BACB30GP<br>BACB30GO BACB30GY<br>BACB30GW | 5/32<br><br><br>3/16<br><br>1/4<br><br>5/16<br><br>3/8 1 | NASS05-755-12<br>NASS05-755-23<br>NASS05-755-48<br>NAS06-745B-12<br>NAS06-755-23<br>NAS08-745B-12<br>NAS08-755-23<br>NAS10-745B-12<br>NAS10-756-26<br>NAS12-745B-12<br>NAS12-756-26 | NAST05-2581-12<br>NAST05-755-23<br>NAST05-755-48<br><br>NAS06-755-48<br><br>NAS08-755-48<br><br>NAS10-756-48<br><br>NAS12-756-48 | NASS05-204C-25O<br>NASS05-204C-30O<br>NASS05-204C-34O<br>NAS06-204C-25OS<br>NAS06-204C-34OS<br>NAS08-204C-25OS<br>NAS08-204C-34OS<br>NAS10-205C-31<br>NAS12-205A-31 | NAST05-204C-20OS<br>NAST05-204C-30OS<br>NAST05-204C-34OS<br>NAS06-204C-30OS<br><br>NAS08-204D-30OS<br>NAS08-205A-31 |
| MULTI-GRIP LOCKBOLT | 3/16<br>1/4 | MG06-745-48<br>MG08-745-48 | | | |
| PT/MS/9SP, MS20600 & MS20601 | 1/4 | PT08-745C-48 | | | |
| CHERRYMAX®, CHERRYMAX® 'AB', MBC®<br>LOCK CREATOR ,BACR15FR/FP, BACR15GF/GK<br>**NAS1900 S & U SERIES BLIND**<br>**RIVET WITH DRIVE WASHER** | 1/8<br>5/32<br>3/16<br>1/4 | 456MAX-751A-21 5<br><br>08MAX-745B-23 | 456MAX-751A-61 5<br><br>08MAX-745C-48 | 456MAX-752-42OS 5<br><br>08MAX-204D-27OS | <br><br>08MAX-204D-37OS |
| **BLIND BOLT (SINGLE ACTION)**<br>**WITH OR W/OUT DRIVE WASHER**<br>M S90353S & U / M S90354S & U<br>M S21140S & U / M S21141S & U<br>M A XI-B OLT®, B A CB 30YY, YU, & YT | 5/32<br>3/16<br>1/4<br>5/16 2 | SB05-745C-23<br>SB06-745B-23<br>SB08-755-23<br>SB10-756-28 | SB05-745C-48<br>SB06-745B-48<br>SB08-755-48<br>SB10-756-48 | SB05-752A-43OS 6<br>SB06-752D-27OS<br>SB08-204D-27OS<br>SB10-205A-35 | <br>SB06-204D-37OS<br>SB08-204D-37OS |
| **BLIND BOLT (SINGLE ACTION)**<br>**WITH DRIVE WASHER**<br>MS90353S & U / MS90354S & U<br>MS21140S & U / MS21141S & U<br>CR7000 SERIES, BACB30YY, YU, & YT | 5/32<br>3/16<br>1/4<br>5/16 2 | UBB05-745C-23<br>UBB06-745B-23<br>UBB08-755-23<br>UBB10-756-28 | UBB05-745C-48<br>UBB06-745B-48<br>UBB08-755-48<br>UBB10-756-48 | UBB05-752A-43OS<br>UBB06-204D-27OS<br>UBB08-204D-27OS<br>UBB10-205B-35 | <br>UBB06-204D-37OS<br>UBB08-204D-37OS |
| EN6122 & UAB130-EU<br>EN6127 & UAB6127-EU<br>EN6128 & UAB100-EU<br>EN6129 & UABP-EU | 5/32<br>3/16<br>1/4 | UAB568-713-21 4 | UAB568-713-61 4 | UAB05-752A-43OS 6<br>UAB06-752A-43OS 6<br>UAB08-204D-27OS | <br><br>UAB08-204D-37OS |
| **BLIND RIVET (SINGLE ACTION)**<br>**WITH OR W/OUT DRIVE WASHER**<br>NAS1900 S & U SERIES | 1/8<br>5/32<br>3/16<br>1/4 | SMLS04-745C-23<br>SMLS05-745C-23<br>SMLS06-745B-23<br>SMLS08-755-23 | SMLS04-745C-48<br>SMLS05-745C-48<br>SMLS06-745B-48<br>SMLS08-755-48 | SMLS04-752A-43OS 6<br>SMLS05-752A-43OS 6<br>SMLS06-752A-43OS 6<br>SMLS08-204D-27OS | |

| | | |
|---|---|---|
| *ALL OFFSET 204 SERIES NOSES REQUIRE 353204 ADAPTER, & ALL OFFSET 205 SERIES NOSES REQUIRE 353205 ADAPTER. | | 1) ALL MATERIALS EXCEPT TITANIUM & STAINLESS. |
| 2) 100 PSI REQUIRED FOR ALLOY (MS90353 & 4). | 3) GENERAL PURPOSE LOCKBOLTS ONLY. | 4) INSTALLS 5/32, 3/16 & 1/4 DIAMETERS. |
| 5) INSTALLS 1/8, 5/32, & 3/16 DIAMETERS | 6) ALL OFFSET 713 AND 752 SERIES NOSES REQUIRE 745751 ADAPTER. | 7) 105 P.S.I. REQUIRED FOR ALLOY STEEL. |
| NOTE: THE LAST 2 DIGITS OF THE NOSE ASSEMBLY REPRESENTS THE LENGTH THE NOSE EXTENDS FROM THE TOOL I.E. -20 = 2.0 INCHES | | |

# Lockbolts
## Blind Rivets & Blind Bolts

# Nietwerkzeuge
## RIVET TOOLING



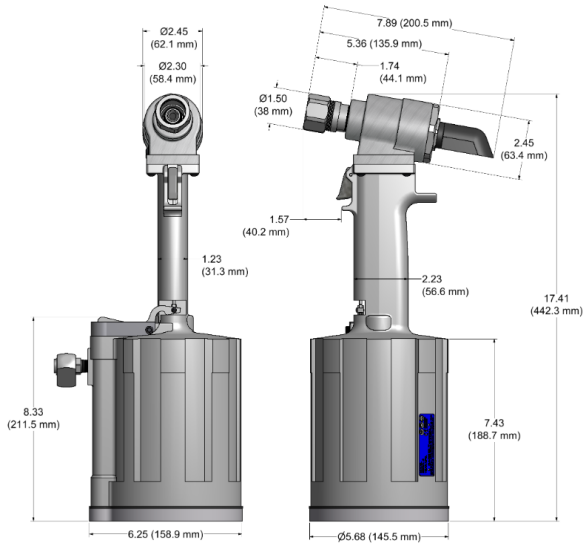


# GB756

**Pneudraulisches Nietgerät**
**PNEUDRAULIC RIVETER**
Accepts 1.1/16" diameter Gage Bilt & Huck® noses

**SPEZIFIKATIONEN / SPECIFICATIONS**

| | | |
|---|---|---|
| Gewicht | Weight | 11.1 lbs. (5,03 kg) |
| Hub | Setting stroke | **.960" (24,38 mm)** |
| Leistung | Rated Pull load | **10000 lbs @ 90 psi (44,49 kN @ 6,2 bar)** |

## GB756 - SELECTION CHART

| FASTENER | DIA | STRAIGHT | | ** RIGHT ANGLE | *OFFSET | |
|---|---|---|---|---|---|---|
| ASP®<br>2 ASP & ASP PF<br>ASP FF & ASP F<br>ASP-LC and MAF | 13/64<br>17/64<br>21/64 | ASP06-745B-23<br>ASP08-745B-23<br>ASP10-755-23 | ASP06-745C-48<br>ASP08-745C-48<br>ASP10-755-48 | ***ASP06-751B-54RA | ASP06-204D-27OS<br>ASP08-204D-27OS<br>ASP10-204D-27OS | ASP06-204D-37OS<br>ASP08-204D-37OS<br>ASP10-204D-37OS |
| BOM®<br>AVBOLT® | 1/4<br>5/16 | BOM08-755-23<br>BOM10-756-26 | | | | |
| COMMERCIAL LOCKBOLTS<br>C6L®<br>AVDELOK® | 3/16<br><br>1/4<br><br>5/16<br>3/8 | NAS06-745B-12<br>NAS06-755-23<br>NAS08-745B-12<br>NAS08-755-23<br>LB10-745C-26<br>LB12-756-26 | NAS06-755-48<br><br>NAS08-755-48<br><br>NAS10-756-48<br>NAS12-756-48 | | NAS06-204C-25OS<br>NAS06-204C-34OS<br>NAS08-204C-25OS<br>NAS08-205A-31<br>NAS10-205D-31<br>NAS12-205A-31 | NAS06-204C-30OS<br><br>NAS08-204D-30OS<br>NAS08-204C-34OS |
| LGP® LOCKBOLT<br><br>LGPL2SC-V BACB30VM<br>LGPL18SC-V BACB30XT<br>LGPL4SC-V ABS0548<br>LGPL2SP-V BACB30VN<br>LGPL4SP-V ASNA2392<br>LGPL8SC-V BACB30WD<br>LGPL9SC-V BACB30WB<br>LGPL9SP-V BACB30VY | 5/32<br><br>3/16<br><br>7/32<br><br>1/4<br><br>5/16<br><br>3/8 | LGP05-2581-12<br>LGP05-2581-48<br>LGP06-2581-12<br>LGP06-2581-48<br>LGP07-745B-12<br>LGP07-755-48<br>LGP08-2581-12<br>LGP08-2581-48<br>LGP10-2581-12<br>LGP10-2581-48<br>LGP12-745B-12<br>LGP12-756-48 | LGP05-2581-23<br><br>LGP06-2581-23<br><br>LGP07-755-23<br><br>LGP08-2581-23<br><br>LGP10-2581-23<br><br>LGP12-756-26 | | LGP05-204C-25OS<br>LGP05-204C-34OS<br>LGP06-204C-25OS<br>LGP06-204C-34OS<br>LGP07-204C-25OS<br>LGP07-204C-34OS<br>LGP08-204C-25OS<br>LGP08-204C-34OS<br>LGP10-205D-31<br><br>LGP12-205A-31 | LGP05-204C-30OS<br><br>LGP06-204C-30OS<br><br>LGP07-204C-30OS<br><br>LGP08-204D-30OS<br>LGP08-205A-31 |
| NAS and GP® SHEAR/TENSION<br>LOCKBOLTS<br><br>BACB30TY BACB30UA<br>BACB30TZ BACB30UB<br>BACB30DY BACB30GX<br>BACB30DX BACB30GP<br>BACB30GO BACB30GY<br>BACB30GW | 5/32<br><br><br>3/16<br><br>1/4<br><br>5/16<br><br>3/8 | NASS05-755-12<br>NASS05-755-23<br>NASS05-755-48<br>NAS06-745B-12<br>NAS06-755-48<br>NAS08-745B-12<br>NAS08-755-48<br>NAS10-745B-12<br>NAS10-756-48<br>NAS12-745B-12<br>NAS12-756-48 | NAST05-2581-12<br>NAST05-755-23<br>NAST05-755-48<br>NAS06-755-23<br><br>NAS08-755-23<br><br>NAS10-756-26<br><br>NAS12-756-26 | | NASS05-204C-25OS<br>NASS05-204C-30OS<br>NASS05-204C-34OS<br>NAS06-204C-25OS<br>NAS06-204C-34OS<br>NAS08-204C-25<br>NAS08-204C-34<br>NAS10-205D-31<br><br>NAS12-205A-31 | NAST05-204C-20OS<br>NAST05-204C-30OS<br>NAST05-204C-34OS<br>NAS06-204C-30OS<br><br>NAS08-204D-30<br>NAS08-205A-31 |
| MULTI-GRIP LOCKBOLT<br>MAGNA-GRIP® and MAXLOK® | 3/16<br>1/4<br>5/16<br>3/8 | MG06-745-48<br>MG08-745-48<br>MG10-756-28<br>MG12-756-28 | | | | |
| MULTI-GRIP STRUCTURAL<br>BLIND RIVET | 5/16<br>3/8 | MGL10-353-28<br>MGL12-353C-28 | | | | |
| **O**VERSIZE<br>**S**TRUCTURAL<br>**R**IVET | 1/4<br>5/16<br>3/8 | OS08-353A-48<br>OS10-756-26<br>OS12-756-26 | <br>OS10-756-48<br>OS12-756-48 | | | |
| **BLIND BOLT (SINGLE ACTION)**<br>**WITH OR W/OUT DRIVE WASHER**<br>MS90353S & U / MS90354S & U<br>MS21140S & U / MS21141S & U<br>CR7000 SERIES,BACB30YY, YU, & YT | 5/32<br>3/16<br>1/4<br><br>5/16<br>3/8 | SB05-745C-23<br>SB06-745B-23<br>SB08-755-23<br><br>SB10-756-28<br>SB12-756-28 | SB05-745C-48<br>SB06-745B-48<br>SB08-755-48<br><br>SB10-756-48<br>SB12-756-48 | ***SB05-751B-54RA<br>***SB06-751B-54RA<br>****SB08-713A-58RA | SB05-204D-27OS<br>SB06-204D-27OS<br>SB08-204D-27OS<br>SB08-205-35<br>SB10-205A-35<br>SB12-205A-35 | SB05-204D-37OS<br>SB06-204D-37OS<br>SB08-204D-37OS |
| **BLIND BOLT (SINGLE ACTION)**<br>**WITH DRIVE WASHER**<br>MS90353S & U / MS90354S & U<br>MS21140S & U / MS21141S & U<br>CR7000 SERIES, BACB30YY, YU, & YT | 5/32<br>3/16<br>1/4<br><br>5/16<br>3/8 | UBB05-745C-23<br>UBB06-745B-23<br>UBB08-755-23<br><br>UBB10-756-28<br>UBB12-756-28 | UBB05-745C-48<br>UBB06-745B-48<br>UBB08-755-48<br><br>UBB10-756-48<br>UBB12-756-48 | ***UBB05-751B-54RA<br>***UBB06-751B-54RA<br>****UBB08-713A-58RA | UBB05-204D-27OS<br>UBB06-204D-27OS<br>UBB08-204D-27OS<br>UBB08-205-35<br>UBB10-205A-35<br>UBB12-205A-35 | UBB05-204D-37OS<br>UBB06-204D-37OS<br>UBB08-204D-37OS |

*ALL OFFSET 204 SERIES NOSES REQUIRE 353204 ADAPTER WITH 756152 STROKE LIMITER..
*ALL OFFSET 205 SERIES NOSES REQUIRE 353205 ADAPTER WITH 756153 STROKE LIMITER.
**NOSE REQUIRES 745751 ADAPTER
***-54RA RIGHT ANGLE SERIES NOSES REQUIRE 745751 ADAPTER WITH 756155 STROKE LIMITER.
****-58RA RIGHT ANGLE NOSES REQUIRE 745751 WITH 756152 STROKE LIMITER

NOTE: THE LAST 2 DIGITS OF THE NOSE ASSEMBLY REPRESENTS THE LENGTH THE NOSE EXTENDS FROM THE TOOL I.E. -20 = 2.0 INCHES




# HUCK 200

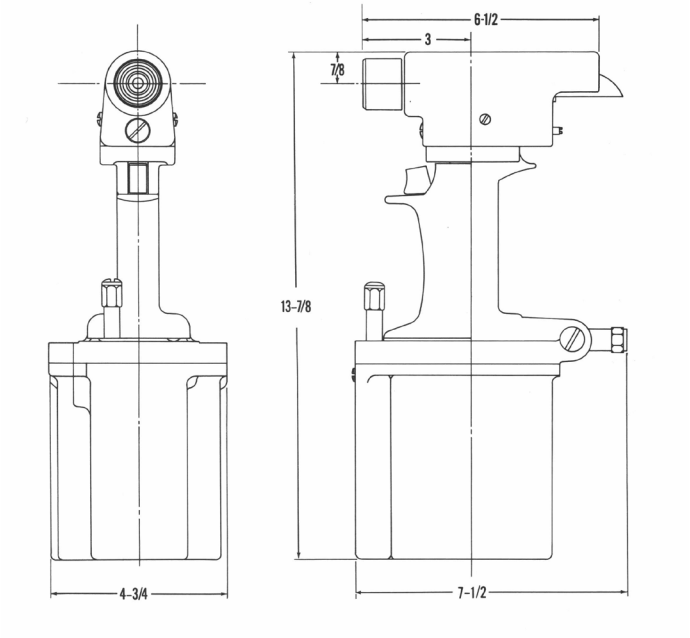


**Pneudraulisches Nietgerät**
**PNEUDRAULIC RIVETER**

**SPEZIFIKATIONEN / SPECIFICATIONS** (Without Nose Assembly)

| | | |
|---|---|---|
| Length (overall) | 71/2 inches | 190 mm |
| Height (overall) | 13-7/8 inches | 352 mm |
| Width (head) | 2 inches | 51 mm |
| Width (cylinder) | 4 3/4 inches | 121 mm |
| Weight | 10-1/2 pounds | 4 8 kg |
| Stroke | 1-3/16 inches | 30 mm |
| Pull Load | 3000 lbs | 13,35 kN |
| Air Required | 18CFM@ 90-100 psi | 009 m3/s @ 6,2-6,3 bar |

## HUCK® 200 - SELECTION CHART

| FASTENER | DIA | STRAIGHT | *OFFSET |
|---|---|---|---|
| **DOUBLE ACTION BLIND BOLT**<br>MS90353 & MS90354 | 5/32 | B05-200B-21 (99-600) | |
| MS21140 & MS21141 | 3/16 | B06-200B-21 (99-589) | |
| **DOUBLE ACTION BLIND RIVET** | 1/8 | MLS04-200B-20 (99-1013) | |
| NAS1919B & NAS1921B<br>NAS1919C & NAS1921C | 5/32 | MLS05-200B-20 (99-458) | |
| NAS1919M & NAS1921M | 3/16 | MLS06-200B-20 (99-459) | |

NOTE: THE LAST 2 DIGITS OF THE NOSE ASSEMBLY REPRESENTS THE LENGTH THE NOSE EXTENDS FROM THE TOOL I.E. -20 = 2.0 INCHES

# Blindnietmutternzange, schwenkbar
## BLIND RIVET NUT HAND PLIER, SWIVEL-MOUNTED

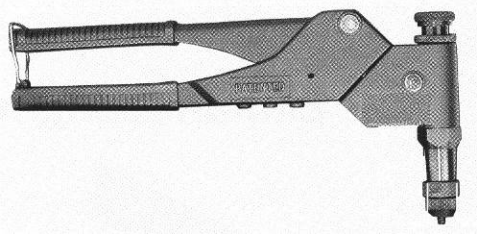

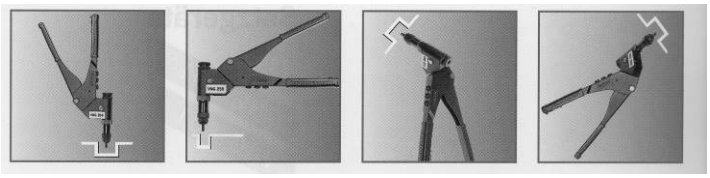

# EH-VNG255

**Satz im Kunststoffkasten, bestehend aus:**

**1 St. Handzange**
**1 Satz Umrüstsätze für Blindnietmuttern, für Größe:**
**Metrisch: M4, M5, M6**
**Zöllig : UNC 6-32, UNC 8-32, UNC 10-24, UNF 10-32, UNF 1/4-28**
**1 Satz Umrüstsatz für Blindnietschrauben, für Größe:**
**Metrisch: M4, M5**

SET IN PLASTIC-CASE, CONSISTING OF:

1 EA HANDPLIER
1 SET ADAPTER FOR BLIND-NUTS SIZE:
METRIC : M4, M5, M6
INCH : UNC 6-32, UNC 8-32, UNC 10-24, UNF 10-32, UNF 1/4-28
1 SET ADAPTER FOR BLIND-BOLTS SIZE:
METRIC : M4, M5

# Handnietgerät für Einnietmuttern
## BLIND RIVET NUT SPEED DRIVER



| Artikel-Nr. PART-NO. | Gewindegröße THREAD SIZE | Artikel Nr. Ersatzdorne mit Mundstück PART NO. MANDRELS AND NOSEPIECES |
|---|---|---|
| **L6000-A** | **6-32** | **SCA-6-32** |
| **L6000-B** | **8-32** | **SCA-8-32** |
| **L6000-C** | **10-32** | **SCA-10-32** |
| **L6000-D** | **1/4"-28** | **SCA-1/4"-28** |

# Hydr.-Handnietgerät für Einnietmuttern
## HYDRAULIC HAND RIVETER/NUTSETTER



# D-100-RN

ca./appr. 4000 lbs Zugkraft/Pulling Force

**Satz mit folgendem Lieferumfang:**
KIT WITH FOLLOWING CONTENTS:

| PART-NO. | Beschreibung | DESCRIPTION |
|---|---|---|
| D-100-C | Hand-Hydraulik Nietgerät | HAND HYDR. RIVETER |
| **Für Cherry-Blindieten / FOR CHERRY RIVETS** | | |
| F-159-C | Mundstück 1/8" | NOSEPIECE 1/8" |
| F-143-C | Mundstück 5/32"-3/16" | NOSEPIECE 5/32"-3/16" |
| F-142-C | Mundstück 1/4" | NOSEPIECE 1/4" |
| F-156-C | Mundstück 3/32" | NOSEPIECE 3/32" |
| **Für Einnietmuttern / FOR RIVET-NUTS** | | |
| F-170-A | Adapter Spindel | MASTER SHAFT |
| F-171 | Adapter Mutter | TURN NUT |
| F-360-C | Zugdorn 6-32 | PULL-UP-STUD 6-32 |
| F-361-C | Zugdorn 8-32 | PULL-UP-STUD 8-32 |
| F-362-C | Zugdorn 10-32 | PULL-UP-STUD 10-32 |
| F-363-C | Zugdorn 1/4-28 | PULL-UP-STUD 1/4-28 |
| F-367-C | Mundstück Gr. 6 | ANVIL NO. 6 |
| F-364-C | Mundstück Gr. 8 | ANVIL NO. 8 |
| F-365-C | Mundstück Gr. 10 | ANVIL NO. 10 |
| F-366-C | Mundstück Gr. 1/4 | ANVIL NO.1/4 |
| F-197 | Aufbewahrungskasten | PLASTIC CASE |

# Visu-Lok

## Blind Fastener Tools

## Master Torque Driver

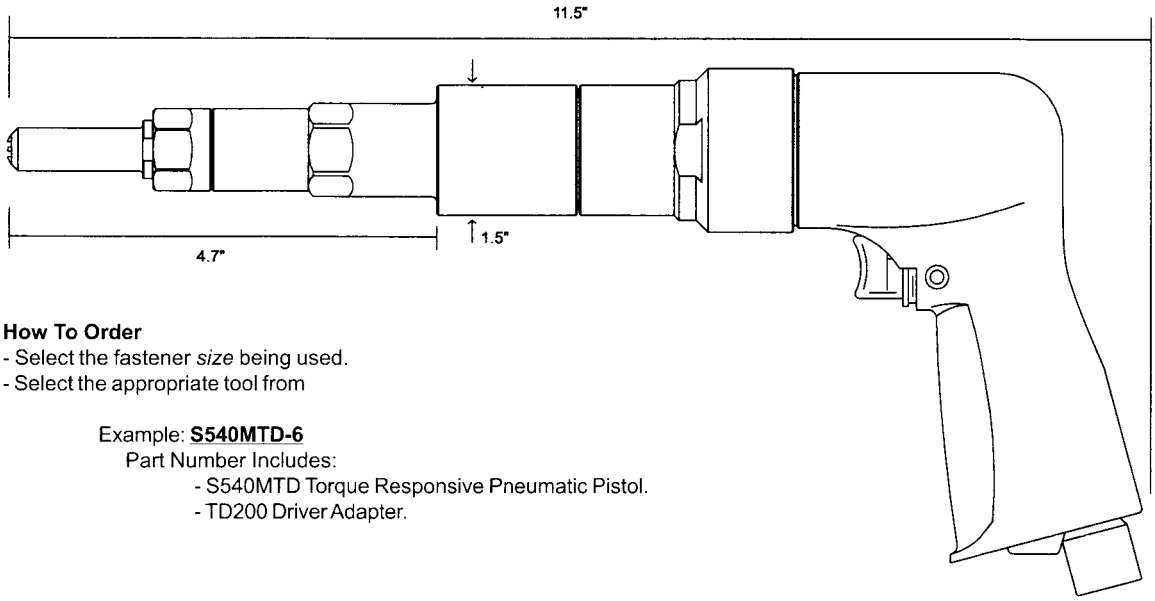


**How To Order**
- Select the fastener *size* being used.
- Select the appropriate tool from

Example: **S540MTD-6**
Part Number Includes:
- S540MTD Torque Responsive Pneumatic Pistol.
- TD200 Driver Adapter.

| Pin Dia | Visu-Lok Series | Pneumatic Pistol | Driver Adapter | Nose | Driver |
|---|---|---|---|---|---|
| 5/32 | flush - 5 | S540MTD-5 | TD165 | PW3652 | TD1651 |
| 3/16 | flush - 6 | S540MTD-6 | TD200 | PW3002 | TD2001 |
| 1/4 | flush - 8 | S540MTD-8 | TD260 | PW3602 | TD2601 |
| 5/16 | flush - 10 | S540MTD-10 | TD312 | PW3122 | TD3121 |
| 3/8 | flush - 12 | S540MTD-12 | PT375 | PT3752 | PT3751 |
| 5/32 | protruding - 5 | S540MTD-5P | TD165P | PW3652P | TD1651 |
| 3/16 | protruding - 6 | S540MTD-6P | TD200P | PW3002P | TD2001 |
| 1/4 | protruding - 8 | S540MTD-8P | TD260P | PW3602P | TD2601 |
| 5/16 | protruding - 10 | S540MTD-10P | TD312P | PW3122P | TD3121 |
| 3/8 | protruding - 12 | S540MTD-12P | PT375P | PW3752P | PT3751 |
| 5/32 | millable - 5 | S540MTD-5A | TD165A | PW3652A | TD1651 |
| 3/16 | millable - 6 | S540MTD-6A | TD200A | PW3002A | TD2001 |
| 1/4 | millable - 8 | S540MTD-8A | TD260A | PW3602A | TD2601 |
| 5/32 | reduced flush - 5 | S540MTD-5T | TD165T | PW3652T | TD1651 |
| 3/16 | reduced flush - 6 | S540MTD-6T | TD200T | PW3002T | TD2001 |
| 1/4 | reduced flush - 8 | S540MTD-8T | TD260T | PW3602T | TD2601 |
| 5/16 | reduced flush - 10 | S540MTD-10T | TD312T | PW3122T | TD3121 |
| 3/8 | reduced flush - 12 | S540MTD-12T | PT375T | PT3752T | PT3751 |

* Driver Adapter contains both the Nose and Driver

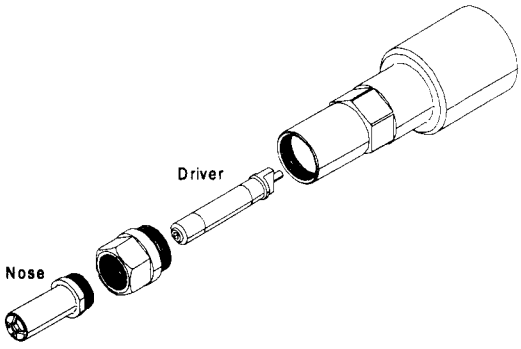


| Technical Data | |
|---|---|
| Operating Preasure | 90 PSI |
| Torque Output | 32.5 lbs |
| Stall Torque | 32.5 lbs |
| Motor Speed | 540 rpm |
| Air Consumption (at free speed) | 28 cfm |
| Horse Power Rating | 0.7 |
| Weight | 3.5lb |

# Visu-Lok

## Blind Fastener Tools

### Pneumatic Drill-Out

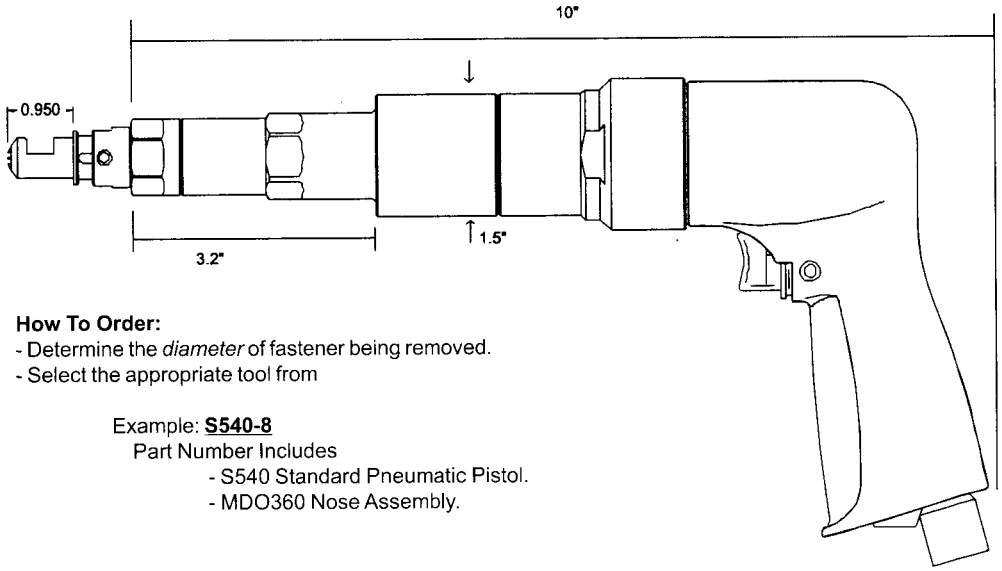


**How To Order:**
- Determine the *diameter* of fastener being removed.
- Select the appropriate tool from

Example: **S540-8**
Part Number Includes
- S540 Standard Pneumatic Pistol.
- MDO360 Nose Assembly.

| Dia | Visu-Lok Series | Complete Assy | Drill-Out Assy | Nose | Drill |
|---|---|---|---|---|---|
| 5/32 | flush - 5 | S540-5 | MDO365 | DO1652 | DO1655-5 |
| 3/16 | flush - 6 | S540-6 | MDO300 | DO2002 | DO1655-6 |
| 1/4 | flush - 8 | S540-8 | MDO360 | DO2602 | DO1655-8 |
| 5/16 | flush - 10 | S540-10 | MDO312 | DO3122 | DO1655-10 |
| 3/8 | flush - 12 | S540-12 | MDO375 | DO3752 | DO1655-12 |
| 5/32 | protruding - 5 | S540-5P | MDO365P | DO1652P | DO1655-5 |
| 3/16 | protruding - 6 | S540-6P | MDO300P | DO2002P | DO1655-6 |
| 1/4 | protruding - 8 | S540-8P | MDO360P | DO2602P | DO1655-8 |
| 5/16 | protruding - 10 | S540-10P | MDO312P | DO3122P | DO1655-10 |
| 3/8 | protruding - 12 | S540-12P | MDO375P | DO3752P | DO1655-12 |
| 5/32 | millable - 5 | S540-5A | MDO365A | DO1652A | DO1655-5 |
| 3/16 | millable - 6 | S540-6A | MDO300A | DO2002A | DO1655-6 |
| 1/4 | millable - 8 | S540-8A | MDO360A | DO2602A | DO1655-8 |
| 5/32 | reduced flush - 5 | S540-5T | MDO365T | DO1652T | DO1655-5 |
| 3/16 | reduced flush - 6 | S540-6T | MDO300T | DO2002T | DO1655-6 |
| 1/4 | reduced flush - 8 | S540-8T | MDO360T | DO2602T | DO1655-8 |
| 5/16 | reduced flush - 10 | S540-10T | MDO312T | DO3122T | DO1655-10 |
| 3/8 | reduced flush - 12 | S540-12T | MDO375T | DO3752T | DO1655-12 |

*Drill out Assembly contains both the Nose and Driver

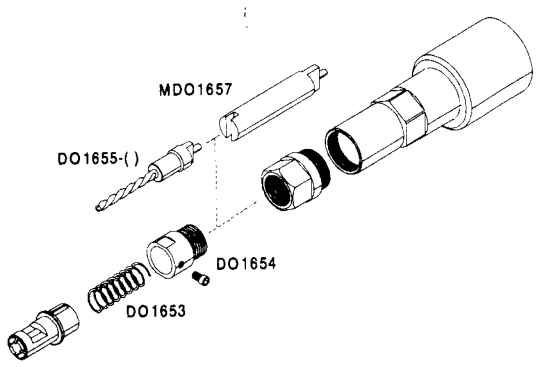


| Technical Data | |
|---|---|
| Operating Preasure | 90 PSI |
| Torque Output | 32.5 lbs |
| Stall Torque | 32.5 lbs |
| Motor Speed | 540 rpm |
| Air Consumption (at free speed) | 28 cfm |
| Horse Power Rating | 0.7 |
| Weight | 3.5lb |

# Visu-Lok

## Blind Fastener Tools

## Torque Responsive Adapter

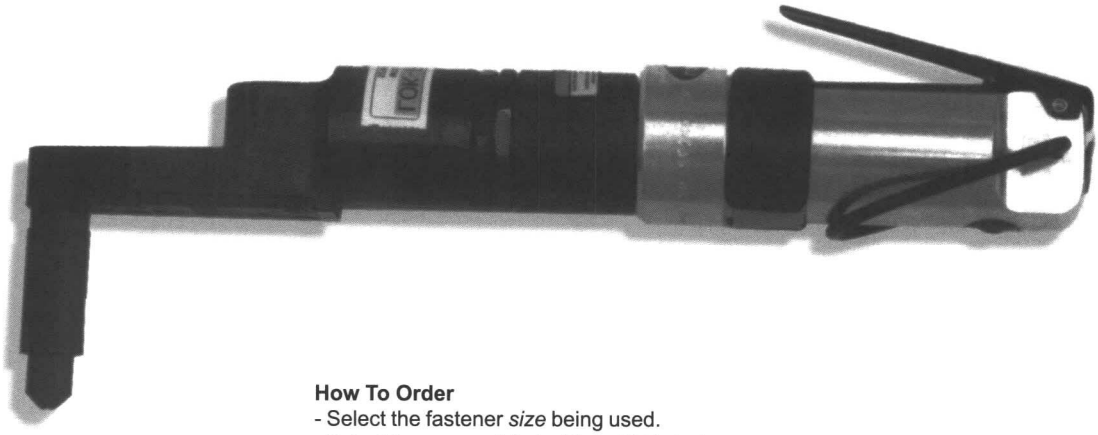

**How To Order**
- Select the fastener *size* being used.
- Select the appropriate tool from Table below

Example: **7440M-6**
Part Number Includes
- 7440M Pneumatic Right Angle Motor.
- PT400 Driver Assembly.

| Dia. | Visu-Lok Series | Pneumatic Assembly | Driver Assy | Nose | Driver |
|---|---|---|---|---|---|
| 5/32 | flush - 5 | 7440M-5 | PT465 | PT4652 | PT4651 |
| 3/16 | flush - 6 | 7440M-6 | PT400 | PT4002 | PT4001 |
| 1/4 | flush - 8 | 7440M-8 | PT460 | PT4602 | PT4601 |
| 5/32 | protruding - 5 | 7440M-5P | PT465P | PT4652P | PT4651 |
| 3/16 | protruding - 6 | 7440M-6P | PT400P | PT4002P | PT4001 |
| 1/4 | protruding - 8 | 7440M-8P | PT460P | PT4602P | PT4601 |
| 5/32 | millable - 5 | 7440M-5A | PT465A | PT4652A | PT4651 |
| 3/16 | millable - 6 | 7440M-6A | PT400A | PT4002A | PT4001 |
| 1/4 | millable - 8 | 7440M-8A | PT460A | PT4602A | PT4601 |
| 5/32 | reduced flush - 5 | 7440M-5T | PT465T | PT4652T | PT4651 |
| 3/16 | reduced flush - 6 | 7440M-6T | PT400T | PT4002T | PT4001 |
| 1/4 | reduced flush - 8 | 7440M-8T | PT460T | PT4602T | PT4601 |

*Driver Assembly contains both the Nose and Driver

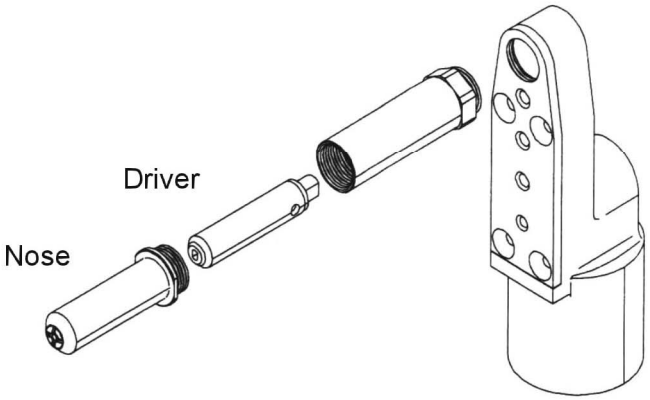


| Technical Data | |
|---|---|
| Operating Preasure | 90 PSI |
| Torque Output | 108 in lbs |
| Stall Torque | 10 ft lbs |
| Motor Speed | 500 rpm |
| Air Consumption (at free speed) | 18 cfm |
| Horse Power Rating | 0.33 |
| Weight | 3.5lb |

# Visu-Lok

## Blind Fastener Tools

### Standard Assembly

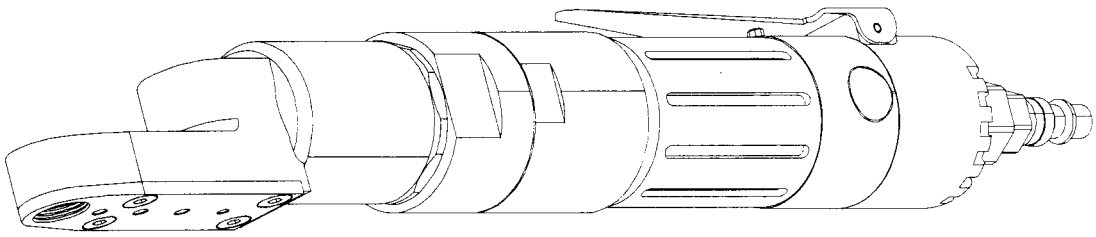

**How To Order**
- Select the fastener *size* being used.
- Select the appropriate tool from Table below

Example: **7440-5**
Part Number Includes
- 7440 Pneumatic Right Angle Motor.
- PW465 Driver Assembly.

| Dia. | Visu-Lok Series | Pneumatic Driver | Driver Assy | Nose | Driver |
|---|---|---|---|---|---|
| 5/32 | flush - 5 | 7440-5 | PW465 | PW3652 | PW4651 |
| 3/16 | flush - 6 | 7440-6 | PW400 | PW3002 | PW4001 |
| 1/4 | flush - 8 | 7440-8 | PW460 | PW3602 | PW4601 |
| 5/32 | protruding - 5 | 7440-5P | PW465P | PW3652P | PW4651 |
| 3/16 | protruding - 6 | 7440-6P | PW400P | PW3002P | PW4001 |
| 1/4 | protruding - 8 | 7440-8P | PW460P | PW3602P | PW4601 |
| 5/32 | millable - 5 | 7440-5A | PW465A | PW3652A | PW4651 |
| 3/16 | millable - 6 | 7440-6A | PW400A | PW3002A | PW4001 |
| 1/4 | millable - 8 | 7440-8A | PW460A | PW3602A | PW4601 |
| 5/32 | reduced flush - 5 | 7440-5T | PW465T | PW3652T | PW4651 |
| 3/16 | reduced flush - 6 | 7440-6T | PW400T | PW3002T | PW4001 |
| 1/4 | reduced flush - 8 | 7440-8T | PW460T | PW3602T | PW4601 |

*Driver Assembly contains both the Nose and Driver

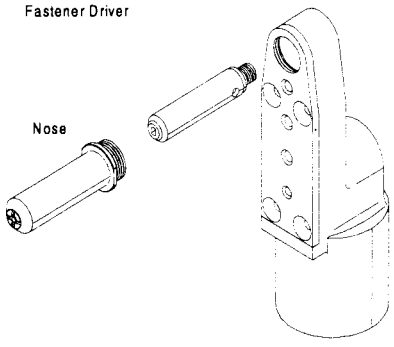


| Technical Data | |
|---|---|
| Operating Preasure | 90 PSI |
| Torque Output | 108 in lbs |
| Stall Torque | 10 ft lbs |
| Motor Speed | 500 rpm |
| Air Consumption (at free speed) | 18 cfm |
| Horse Power Rating | 0.33 |
| Weight | 3.5lb |

# Visu-Lok

## Blind Fastener Tools

## Pneumatic Close Quarter

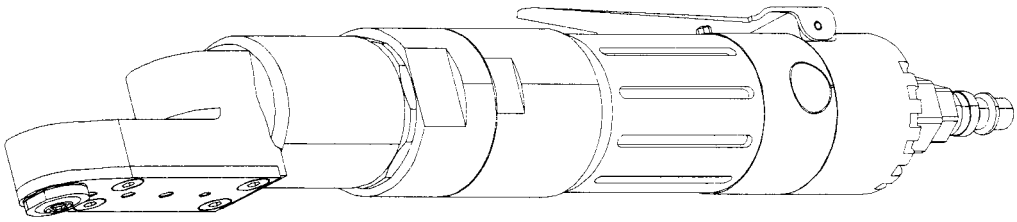

**How To Order**
- Select the fastener *size* being used.
- Select the appropriate tool from Table below

Example: **7440C-5**
Part Number Includes
- 7440C Pneumatic Right Angle Close Quarters Motor.
- 41165 Nose Tip.
- RW5-1 Drive Gear.

| Dia. | Visu-Lok Series | Pneumatic Driver | Drive Gear | Nose Tip |
|---|---|---|---|---|
| 5/32 | flush - 5 | 7440C-5 | RW5-1 | 41165 |
| 3/16 | flush - 6 | 7440C-6 | RW6-1 | 41200 |
| 1/4 | flush - 8 | 7440C-8 | RW8-1 | 41260 |
| 5/32 | protruding - 5 | 7440C-5P | RW5-1 | 41165P |
| 3/16 | protruding - 6 | 7440C-6P | RW6-1 | 41200P |
| 1/4 | protruding - 8 | 7440C-8P | RW8-1 | 41260P |
| 5/32 | millable - 5 | 7440C-5A | RW5-1 | 41165A |
| 3/16 | millable - 6 | 7440C-6A | RW6-1 | 41200A |
| 1/4 | millable - 8 | 7440C-8A | RW8-1 | 41260A |
| 5/32 | reduced flush - 5 | 7440C-5T | RW5-1 | 41165T |
| 3/16 | reduced flush - 6 | 7440C-6T | RW6-1 | 41200T |
| 1/4 | reduced flush - 8 | 7440C-8T | RW8-1 | 41260T |

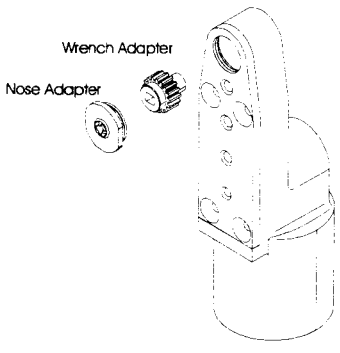


| Technical Data | |
|---|---|
| Operating Preasure | 90 PSI |
| Torque Output | 108 in lbs |
| Stall Torque | 10 ft lbs |
| Motor Speed | 500 rpm |
| Air Consumption (at free speed) | 18 cfm |
| Horse Power Rating | 0.33 |
| Weight | 3.5lb |

# Visu-Lok
## Blind Fastener Tools

## Ratchet Hand Tool

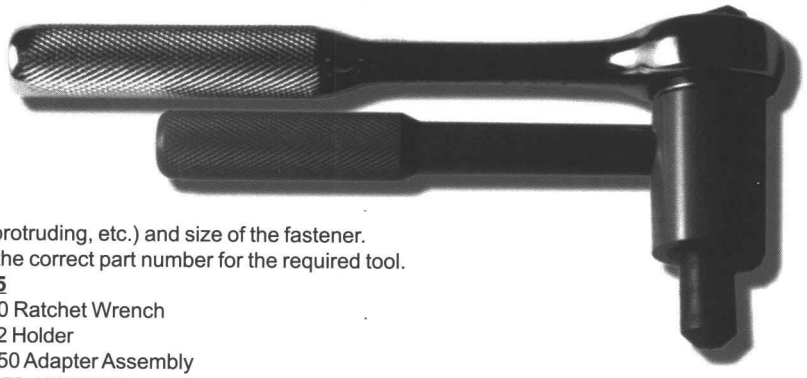

**How To Order:**
- Determine the type (flush, protruding, etc.) and size of the fastener.
- Refer to the table to select the correct part number for the required tool.

Example: **HWF165**
- HW300 Ratchet Wrench
- HW202 Holder
- HW1650 Adapter Assembly (HW1652, HW1651)

| Dia. | Visu-Lok Series | Complete Assembly | Driver Assembly | Nose | Wrench Driver |
|---|---|---|---|---|---|
| 5/32 | flush - 5 | HWF165 | HW1650 | HW1652 | HW1651 |
| 3/16 | flush - 6 | HWF200 | HW2000 | HW2002 | HW2001 |
| 1/4 | flush - 8 | HWF260 | HW2600 | HW2602 | HW2601 |
| 5/16 | flush - 10 | HWF312 | HW3120 | HW3122 | HW3121 |
| 3/8 | flush - 12 | HWF375 | HW3750 | HW3752 | HW3751 |
| 5/32 | protruding - 5 | HWP165 | HW1650P | HW1652P | HW1651 |
| 3/16 | protruding - 6 | HWP200 | HW2000P | HW2002P | HW2001 |
| 1/4 | protruding - 8 | HWP260 | HW2600P | HW2602P | HW2601 |
| 5/16 | protruding - 10 | HWP312 | HW3120P | HW3122P | HW3121 |
| 3/8 | protruding - 12 | HWP375 | HW3750P | HW3752P | HW375 |
| 5/32 | millable - 5 | HWA165 | HW1650A | HW1652A | HW1651 |
| 3/16 | millable - 6 | HWA200 | HW2000A | HW2002A | HW2001 |
| 1/4 | millable - 8 | HWA260 | HW2600A | HW2602A | HW2601 |
| 5/32 | reduced flush - 5 | HWT165 | HW1650T | HW1652T | HW1651 |
| 3/16 | reduced flush - 6 | HWT200 | HW2000T | HW2002T | HW2001 |
| 1/4 | reduced flush - 8 | HWT260 | HW2600T | HW2602T | HW2601 |
| 5/16 | reduced flush - 10 | HWT312 | HW3120T | HW3122T | HW3121 |
| 3/8 | reduced flush - 12 | HWT375 | HW3750T | HW3752T | HW3751 |

*Driver Assembly contains both the Nose and Driver

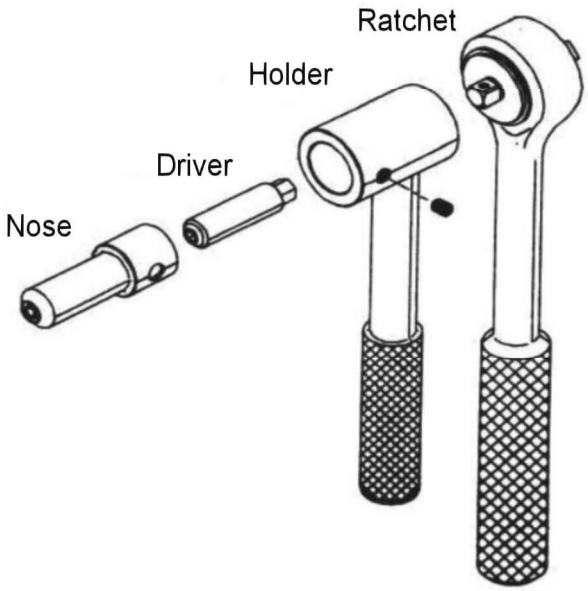

# Visu-Lok
## Blind Fastener Tools

## Close Quarter Hand Tool

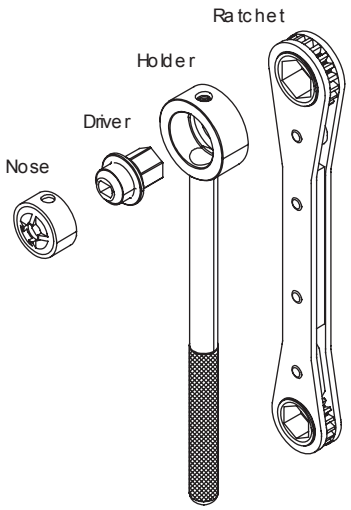


**How To Order**
**- Select the fastener size.**
**- Refer to the table to select the correct part number for the tool.**

**Example: HWF5**
**Part Number Includes**
**- HW101 Ratchet Wrench**
**- HW102 Adapter Assembly**
**- HN5 Nose**
**- HW5 Drive**

| Dia. | Visu-Lok Series | Complete Assembly | Drive | Nose | Ratchet | Holder |
|---|---|---|---|---|---|---|
| 5/32" | flush - 5 | HWF5 | HW5 | HN5 | HW101 | HW102 |
| 3/16" | flush - 6 | HWF6 | HW6 | HN6 | | |
| 1/4" | flush - 8 | HWF8 | HW8 | HN8 | HW401 | HW402 |
| 5/16" | flush - 10 | HWF10 | HW10 | HN10 | | |
| 3/8" | flush - 12 | HWF12 | HW12 | HN12 | | |
| 5/32" | protruding - 5 | HWP5 | HW5 | HN5P | HW101 | HW102 |
| 3/16" | protruding - 6 | HWP6 | HW6 | HN6P | | |
| 1/4" | protruding - 8 | HWP8 | HW8 | HN8P | HW401 | HW402 |
| 5/16" | protruding - 10 | HWP10 | HW10 | HN10P | | |
| 3/8" | protruding - 12 | HWP12 | HW12 | HN12P | | |
| 5/32" | millable - 5 | HWA5 | HW5 | HN5A | HW101 | HW102 |
| 3/16" | millable - 6 | HWA6 | HW6 | HN6A | | |
| 1/4" | millable - 8 | HWA8 | HW8 | HN8A | HW401 | HW402 |
| 5/32" | reduced flush - 5 | HWT5 | HW5 | HN5T | HW101 | HW102 |
| 3/16" | reduced flush - 6 | HWT6 | HW6 | HN6T | | |
| 1/4" | reduced flush - 8 | HWT8 | HW8 | HN8T | HW401 | HW402 |
| 5/16" | reduced flush - 10 | HWT10 | HW10 | HN10T | | |
| 3/8" | reduced flush - 12 | HWT12 | HW12 | HN12T | | |

# Visu-Lok

## Blind Fastener Tools

## Torque Adapter

**How To Order:**
- Select the fastener *size* being used.
- Select the appropriate tool part number from the table

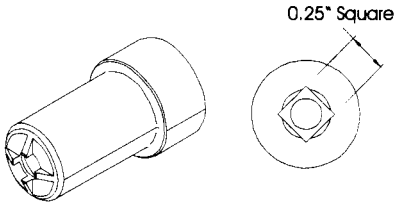


| Dia. | Visu-Lok Series | Toque Adapter | Torque (in. lbs.) |
|---|---|---|---|
| 5/32 | flush - 5 | TOR1652 | 4.00 |
| 3/16 | flush - 6 | TOR2002 | 6.00 |
| 1/4 | flush - 8 | TOR2602 | 10.00 |
| 5/16 | flush - 10 | TOR3122 | 20.00 |
| 3/8 | flush - 12 | TOR3752 | 30.00 |
| 5/32 | protruding - 5 | TOR1652P | 4.00 |
| 3/16 | protruding - 6 | TOR2002P | 6.00 |
| 1/4 | protruding - 8 | TOR2602P | 10.00 |
| 5/16 | protruding - 10 | TOR3122P | 20.00 |
| 3/8 | protruding - 12 | TOR3752P | 30.00 |
| 5/32 | millable - 5 | TOR1652A | 4.00 |
| 3/16 | millable - 6 | TOR2002A | 6.00 |
| 1/4 | millable - 8 | TOR2602A | 10.00 |
| 5/32 | reduced flush - 5 | TOR1652T | 4.00 |
| 3/16 | reduced flush - 6 | TOR2002T | 6.00 |
| 1/4 | reduced flush - 8 | TOR2602T | 10.00 |
| 5/16 | reduced flush - 10 | TOR3122T | 20.00 |
| 3/8 | reduced flush - 12 | TOR3752T | 30.00 |

## Hand Drill-Out

**How To Order:**
- Select the fastener *size* being used.
- Select the appropriate tool part number from the table



| Dia. | Visu-Lok Series | Hand Drill Out | Drill Size |
|---|---|---|---|
| 5/32 | flush - 5 | HDO1652 | 9/64 |
| 3/16 | flush - 6 | HDO2002 | 5/32 |
| 1/4 | flush - 8 | HDO2602 | 13/64 |
| 5/16 | flush - 10 | HDO3122 | 1/4 |
| 3/8 | flush - 12 | HDO3752 | 9/3 |
| 5/32 | protruding - 5 | HDO1652P | 9/64 |
| 3/16 | protruding - 6 | HDO2002P | 5/32 |
| 1/4 | protruding - 8 | HDO2602P | 13/64 |
| 5/16 | protruding - 10 | HDO3122P | 1/4 |
| 3/8 | protruding - 12 | HDO3752P | 9/3 |
| 5/32 | millable - 5 | HDO1652A | 9/64 |
| 3/16 | millable - 6 | HDO2002A | 5/32 |
| 1/4 | millable - 8 | HDO2602A | 13/64 |
| 5/32 | reduced flush - 5 | HDO1652T | 9/64 |
| 3/16 | reduced flush - 6 | HDO2002T | 5/32 |
| 1/4 | reduced flush - 8 | HDO2602T | 13/64 |
| 5/16 | reduced flush - 10 | HDO3122T | 1/4 |
| 3/8 | reduced flush - 12 | HDO3752T | 9/3 |

# Visu-Lok
## Blind Fastener Tools

### Visu-Lok
### Break-Off Gauges

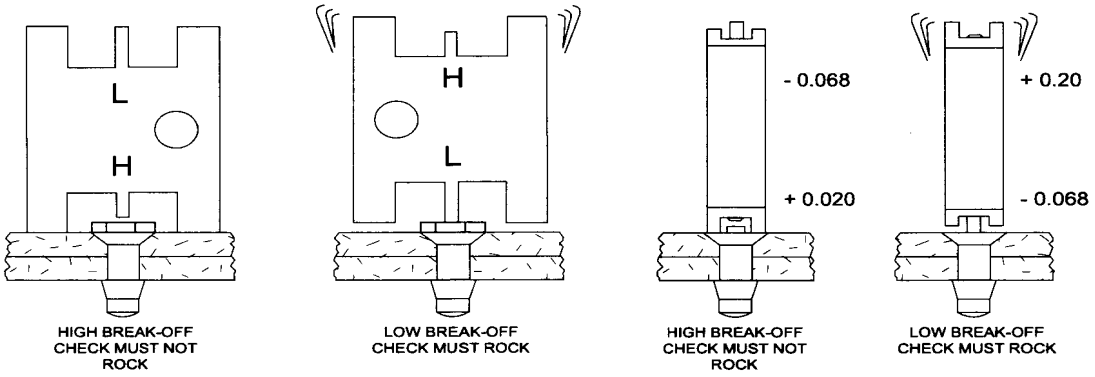


| Visu-Lok Series | **Leaf Gauges** | Break-Off Limits |
|---|---|---|
| PLT210-5 | **3P5** | +.088 / +.000 |
| PLT210-6 | **3P6** | +.098 / +.010 |
| PLT210-8 | **3P8** | +.135 / +.047 |
| PLT210-10 | **3P10** | +.146 / +.043 |
| PLT210-12 | **3P12** | +.152 / +.049 |
| PLT110-5 | **3F5** | +.020 / -.068 |
| PLT110-6 | **3F6** | +.015 / -.073 |
| PLT110-8 | **3F8** | +.010 / -.078 |
| PLT110-10 | **3F10** | +.010 / -.083 |
| PLT110-12 | **3F12** | +.010 / -.093 |
| PLT220-5 | **A3P5** | +.088 / +.000 |
| PLT220-6 | **A3P6** | +.103 / +.015 |
| PLT220-8 | **A3P8** | +.130 / +.032 |
| PLT220-10 | **A3P10** | +.130 / +.027 |
| PLT220-12 | **A3P12** | +.130 / +.027 |
| PLT120-5 | - | - |
| PLT120-6 | - | - |
| PLT120-8 | - | - |
| PLT120-10 | - | - |
| PLT120-12 | - | - |
| PLT130-5 | **3P5** | +.088 / +.000 |
| PLT130-6 | **3P6** | +.098 / +.010 |
| PLT130-8 | **3P8** | +.098 / +.010 |
| PLT230-5 | **3P5** | +.088 / +.000 |
| PLT230-6 | **3PA6** | +.103 / +.015 |
| PLT230-8 | **3P8** | +.135 / +.047 |
| PLT1058-5 | - | - |
| PLT1058-6 | - | - |
| PLT1058-8 | - | - |
| PLT1058-10 | - | - |
| PLT1058-12 | - | - |

| Round Gauges | Break-Off Limits | Jo-Bolt Series |
|---|---|---|
| - | - | - |
| **4P6** | -.005 / -.103 | P/PO 200 |
| **4P8** | +.010 / -.088 | P/PO 260 |
| **4P10** | -.004 / -.117 | P/PO 312 |
| **4P12** | -.028 / -.141 | P/PO 375 |
| **4F5** | +.020 / -.068 | - |
| **4F6** | +.015 / -.073 | - |
| **4F8** | +.010 / -.078 | - |
| **4F10** | +.010 / -.083 | - |
| **4F12** | +.010 / -.093 | - |
| - | - | - |
| - | - | - |
| - | - | - |
| - | - | - |
| - | - | - |
| **A4F5-LS** | +.082 / -.006 | - |
| **A4F6-LS** | +.072 / -.016 | - |
| **A4F8-LS** | +.072 / -.026 | - |
| **A4F10-LS** | +.072 / -.031 | - |
| **A4F12-LS** | +.072 / -.031 | - |
| - | - | - |
| **4FA6** | +.025 / -.069 | SHFA/FAO 200 |
| **4FA8** | +.026 / -.069 | SHFA/FAO 260 |
| - | - | - |
| - | - | - |
| - | - | - |
| **LF5-F5** | +.088 / +.000 | - |
| **LF5-F5** | +.088 / +.000 | - |
| **LF5-F8** | +.098 / +.000 | - |
| **LF5-F10** | +.103 / +.000 | - |
| **LF5-F10** | +.103 / +.000 | - |

# Visu-Lok
Blind Fastener Tools

## Visu-Lok
## Grip Scales

### Grip Scale Part #: LFVLG-1

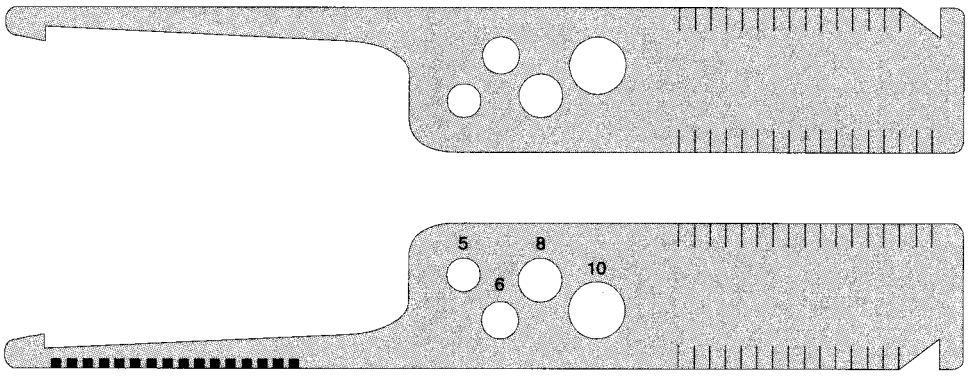


**Selection of Grip Length**

In measuring hole depth take reading where the skin surface meets the number or line on gauge. If directly on a line use either the indicated grip or the next longer grip.

In cases where there a tappered sheet condition exits, determine grip length at the hole centerline. The taper must not exceed 7° to ensure the proper performance of the fastener.

# Composi-Lok
## Blind Fastener Tools

## Composi-Lok
## Master Torque Driver

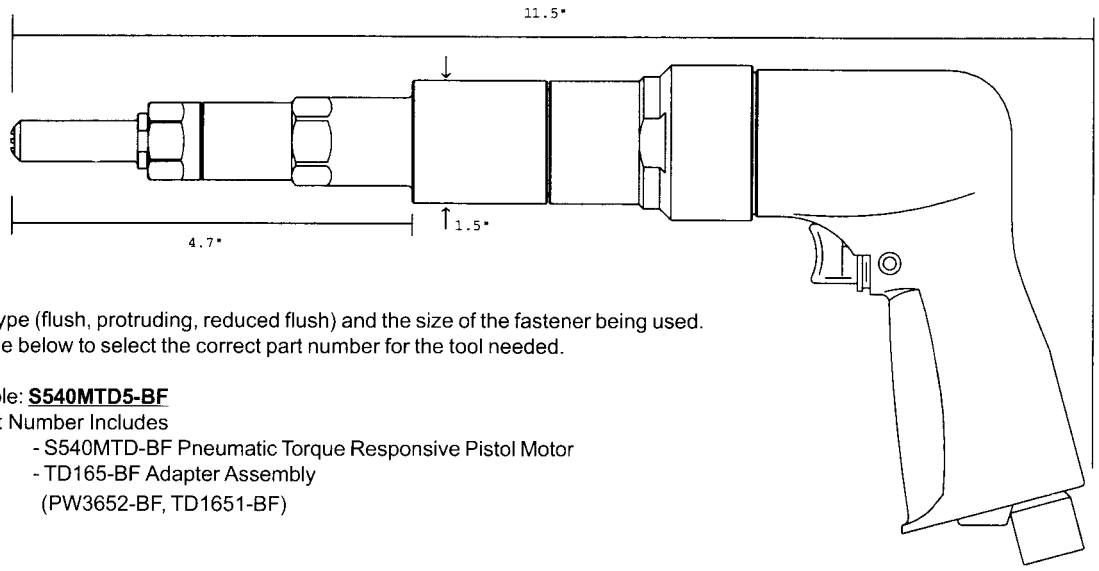


**How To Order:**
- Determine the type (flush, protruding, reduced flush) and the size of the fastener being used.
- Refer to the table below to select the correct part number for the tool needed.

Example: **S540MTD5-BF**
Part Number Includes
- S540MTD-BF Pneumatic Torque Responsive Pistol Motor
- TD165-BF Adapter Assembly
(PW3652-BF, TD1651-BF)

| Dia. | Composi-Lok Series | Complete Assembly | Adapter Assembly | Driver | Nose |
|---|---|---|---|---|---|
| 5/32 | flush - 5 | S540MTD5 - BF | TD165 - BF | TD1651 -BF | PW3652 - BF |
| 3/16 | flush - 6 | S540MTD6 - BF | TD200 - BF | TD2001 - BF | PW3002 - BF |
| 7/32 | flush - 7 | S540MTD7 - BF | TD220 - BF | TD7 - BF | PW7F - BF |
| 1/4 | flush - 8 | S540MTD8 - BF | TD260 - BF | TD2601 - BF | PW3602 - BF |
| 9/32 | flush - 9 | S540MTD9 - BF | PT280 - BF | PT9 - BF | PT9F - BF |
| 5/16 | flush - 10 | S540MTD10 - BF | PT312 - BF | PT10 - BF | PT10F - BF |
| 11/32 | flush - 11 | S540MTD11 - BF | PT340 - BF | PT11 - BF | PT11F - BF |
| 3/8 | flush - 12 | S540MTD12 - BF | PT375 - BF | PT12 - BF | PT12F - BF |
| 5/32 | protruding - 5 | S540MTD5P - BF | TD165P - BF | TD1651 -BF | PW3652P - BF |
| 3/16 | protruding - 6 | S540MTD6P - BF | TD200P - BF | TD2001 - BF | PW3002P - BF |
| 7/32 | protruding - 7 | S540MTD7P - BF | TD220P - BF | TD7 - BF | PW7P - BF |
| 1/4 | protruding - 8 | S540MTD8P - BF | TD260P - BF | TD2601 - BF | PW3602P - BF |
| 9/32 | protruding - 9 | S540MTD9P - BF | PT280P - BF | PT9 - BF | PT9P - BF |
| 5/16 | protruding - 10 | S540MTD10P - BF | PT312P - BF | PT10 - BF | PT10P - BF |
| 11/32 | protruding - 11 | S540MTD11P - BF | PT340P - BF | PT11 - BF | PT11P - BF |
| 3/8 | protruding - 12 | S540MTD12P - BF | PT375P - BF | PT12 - BF | PT12P - BF |
| 5/32 | reduced flush - 5 | S540MTD5T-BF | TD165T-BF | TD1651-BF | PW3652T-BF |
| 3/16 | reduced flush - 6 | S540MTD6T-BF | TD200T-BF | TD2001-BF | PW3002T-BF |
| 7/32 | reduced flush - 7 | S540MTD7T-BF | TD220T-BF | TD7-BF | PW7FT-BF |
| 1/4 | reduced flush - 8 | S540MTD8T-BF | TD260T-BF | TD2601-BF | PW3602T-BF |
| 9/32 | reduced flush - 9 | S540MTD9T-BF | PT280T-BF | PT9-BF | PT9FT-BF |
| 5/16 | reduced flush - 10 | S540MTD10T-BF | PT312T-BF | PT10-BF | PT10FT-BF |
| 11/32 | reduced flush - 11 | S540MTD11T-BF | PT340T-BF | PT11-BF | PT11FT-BF |
| 3/8 | reduced flush - 12 | S540MTD12T-BF | PT375T-BF | PT12-BF | PT12FT-BF |

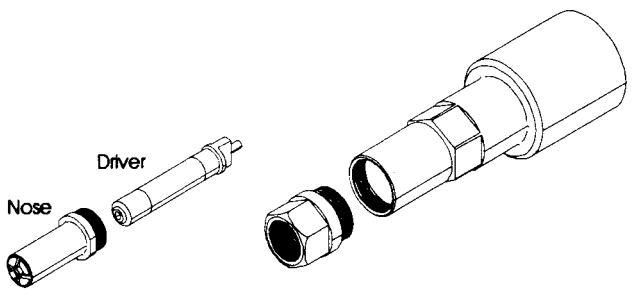


| Technical Data | |
|---|---|
| Operating Preasure | 90 PSI |
| Torque Output | 32.5 lbs |
| Stall Torque | 32.5 lbs |
| Motor Speed | 540 rpm |
| Air Consumption (at free speed) | 28 cfm |
| Horse Power Rating | 0.7 |
| Weight | 3.5lb |

# Composi-Lok
## Blind Fastener Tools

## Composi-Lok
## Right Angle Master Torque Driver



**How To Order:**
- Determine the type (flush, protruding, reduced flush) and the size of the fastener being used.
- Refer to the table below to select the correct part number for the tool needed.

Example: **7440M5-BF**
Part Number Includes
- 7440M Torque Responsive Pneumatic Wrench Motor
- TD565-BF Adapter Assembly
(TD5652-BF, TD5651-BF)

| Dia. | Composi-Lok Series | Complete Assembly | Adapter Assembly | Wrench Driver | Nose Adapter |
|---|---|---|---|---|---|
| 5/32 | flush - 5 | 7440M5 - BF | TD565 - BF | TD5651 - BF | TD5652 - BF |
| 3/16 | flush - 6 | 7440M6 - BF | TD500 - BF | TD5001 - BF | TD5002 - BF |
| 7/32 | flush - 7 | 7440M7 - BF | TD520 - BF | TD5201 - BF | TD5202 - BF |
| 1/4 | flush - 8 | 7440M8 - BF | TD560 - BF | TD5601 - BF | TD5602 - BF |
| 5/32 | protruding - 5 | 7440M5P - BF | TD565P - BF | TD5651 - BF | TD5652P - BF |
| 3/16 | protruding - 6 | 7440M6P - BF | TD500P - BF | TD5001 - BF | TD5002P - BF |
| 7/32 | protruding - 7 | 7440M7P - BF | TD520P - BF | TD5201 - BF | TD5202P - BF |
| 1/4 | protruding - 8 | 7440M8P - BF | TD560P - BF | TD5601 - BF | TD5602P - BF |
| 5/32 | reduced flush - 5 | 7440M5T - BF | TD565T-BF | TD5651-BF | TD5652T-BF |
| 3/16 | reduced flush - 6 | 7440M6T - BF | TD500T-BF | TD5001-BF | TD5002T-BF |
| 7/32 | reduced flush - 7 | 7440M7T - BF | TD520T-BF | TD5201-BF | TD5202T-BF |
| 1/4 | reduced flush - 8 | 7440M8T - BF | TD560T-BF | TD5601-BF | TD5602T-BF |

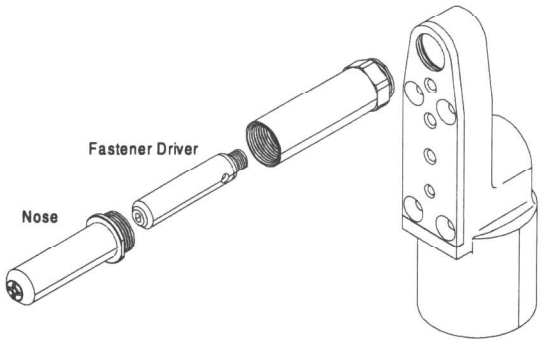


| Technical Data | |
|---|---|
| Operating Preasure | 90 PSI |
| Torque Output | 108 in lbs |
| Stall Torque | 10 ft lbs |
| Motor Speed | 500 rpm |
| Air Consumption (at free speed) | 18 cfm |
| Horse Power Rating | 0.33 |
| Weight | 3.5lb |

# Composi-Lok

## Blind Fastener Tools

## Composi-Lok
## Right Angle Close Quarter

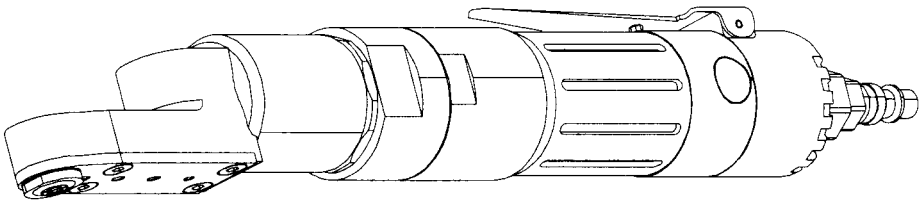

**How To Order:**
- Determine the type (flush, protruding, reduced flush) and the size of the fastener being used.
- Refer to the table below to select the correct part number for the tool needed.

Example: **7440C5-BF**
Part Number Includes
- 7440C Close Quarters Pneumatic Motor
- 41165-BF Nose Adapter
- RW5-1-BF Wrench Adapter

| Dia. | Composi-Lok Series | Complete Assembly | Drive Gear | Nose |
|---|---|---|---|---|
| 5/32 | flush - 5 | 7440C5 - BF | RW5-1-BF | 41165 - BF |
| 3/16 | flush - 6 | 7440C6 - BF | RW6-1-BF | 41200 - BF |
| 7/32 | flush - 7 | 7440C7 - BF | RW7-1-BF | 41220 - BF |
| 1/4 | flush - 8 | 7440C8 - BF | RW8-1-BF | 41260 - BF |
| 5/32 | protruding - 5 | 7440C5P - BF | RW5-1-BF | 41165P - BF |
| 3/16 | protruding - 6 | 7440C6P - BF | RW6-1-BF | 41200P - BF |
| 7/32 | protruding - 7 | 7440C7P - BF | RW7-1-BF | 41220P - BF |
| 1/4 | protruding - 8 | 7440C8P - BF | RW8-1-BF | 41260P - BF |
| 5/32 | reduced flush - 5 | 7440C5T - BF | RW5-1-BF | 41165T-BF |
| 3/16 | reduced flush - 6 | 7440C6T - BF | RW6-1-BF | 41200T-BF |
| 7/32 | reduced flush - 7 | 7440C7T - BF | RW7-1-BF | 41220T-BF |
| 1/4 | reduced flush - 8 | 7440C8T - BF | RW8-1-BF | 41260T-BF |

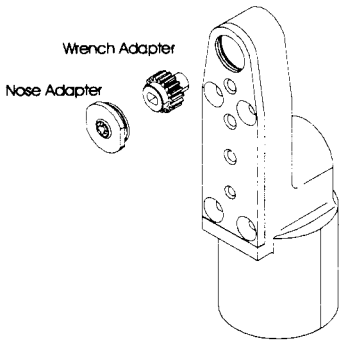


| Technical Data | |
|---|---|
| Operating Preasure | 90 PSI |
| Torque Output | 108 in lbs |
| Stall Torque | 10 ft lbs |
| Motor Speed | 500 rpm |
| Air Consumption (at free speed) | 18 cfm |
| Horse Power Rating | 0.33 |
| Weight | 3.5lb |

# Composi-Lok
## Blind Fastener Tools

## Composi-Lok
## Ratchet Hand Tool

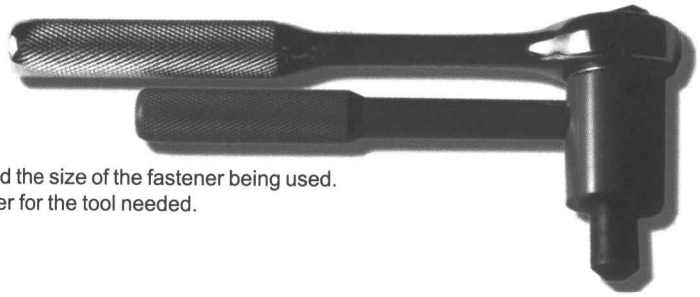

**How To Order:**
- Determine the type (flush, protruding, reduced flush) and the size of the fastener being used.
- Refer to the table below to select the correct part number for the tool needed.

Example: **HW165-BF**
Part Number Includes
- HW300 Ratchet Wrench
- HW202 Handle
- HW1650-BF Adapter Assembly (HW1652-BF, HW1651-BF)

| Dia. | Composi-Lok Series | Complete Assembly | Adapter Assembly | Wrench Adapter | Nose Adapter |
|---|---|---|---|---|---|
| 5/32 | flush - 5 | HWF165 - BF | HW1650 - BF | HW1651 - BF | HW1652 - BF |
| 3/16 | flush - 6 | HWF200 - BF | HW2000 - BF | HW2001 - BF | HW2002 - BF |
| 7/32 | flush - 7 | HWF220 - BF | HW2200 - BF | HW2201 - BF | HW2202 - BF |
| 1/4 | flush - 8 | HWF260 - BF | HW2600 - BF | HW2601 - BF | HW2602 - BF |
| 9/32 | flush - 9 | HWF280 - BF | HW2800 - BF | HW2801 - BF | HW2802 - BF |
| 5/16 | flush - 10 | HWF312 - BF | HW3120 - BF | HW3121 - BF | HW3122 - BF |
| 11/32 | flush - 11 | HWF340 - BF | HW3400 - BF | HW3401 - BF | HW3402 - BF |
| 3/8 | flush - 12 | HWF375 - BF | HW3750 - BF | HW3751 - BF | HW3752 - BF |
| 5/32 | protruding - 5 | HWP165 - BF | HW1650P - BF | HW1651 - BF | HW1652P - BF |
| 3/16 | protruding - 6 | HWP200 - BF | HW2000P - BF | HW2001 - BF | HW2002P - BF |
| 7/32 | protruding - 7 | HWP220 - BF | HW2200P - BF | HW2201 - BF | HW2202P - BF |
| 1/4 | protruding - 8 | HWP260 - BF | HW2600P - BF | HW2601 - BF | HW2602P - BF |
| 9/32 | protruding - 9 | HWP280 - BF | HW2800P - BF | HW2801 - BF | HW2802P - BF |
| 5/16 | protruding - 10 | HWP312 - BF | HW3120P - BF | HW3121 - BF | HW3122P - BF |
| 11/32 | protruding - 11 | HWP340 - BF | HW3400P - BF | HW3401 - BF | HW3402P - BF |
| 3/8 | protruding - 12 | HWP375 - BF | HW3750P - BF | HW3751 - BF | HW3752P - BF |
| 5/32 | reduced flush - 5 | HWT165-BF | HW1650T-BF | HW1651-BF | HW1652T-BF |
| 3/16 | reduced flush - 6 | HWT200-BF | HW2000T-BF | HW2001-BF | HW2002T-BF |
| 7/32 | reduced flush - 7 | HWT220-BF | HW2200T-BF | HW2201-BF | HW2202T-BF |
| 1/4 | reduced flush - 8 | HWT260-BF | HW2600T-BF | HW2601-BF | HW2602T-BF |
| 9/32 | reduced flush - 9 | HWT280-BF | HW2800T-BF | HW2801-BF | HW2802T-BF |
| 5/16 | reduced flush - 10 | HWT312-BF | HW3120T-BF | HW3121-BF | HW3122T-BF |
| 11/32 | reduced flush - 11 | HWT340-BF | HW3400T-BF | HW3401-BF | HW3402T-BF |
| 3/8 | reduced flush - 12 | HWT375-BF | HW3750T-BF | HW3751-BF | HW3752T-BF |

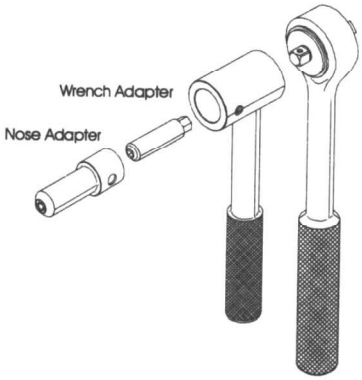

# Composi-Lok

## Blind Fastener Tools

## Composi-Lok
## Close Quarter Hand Tool

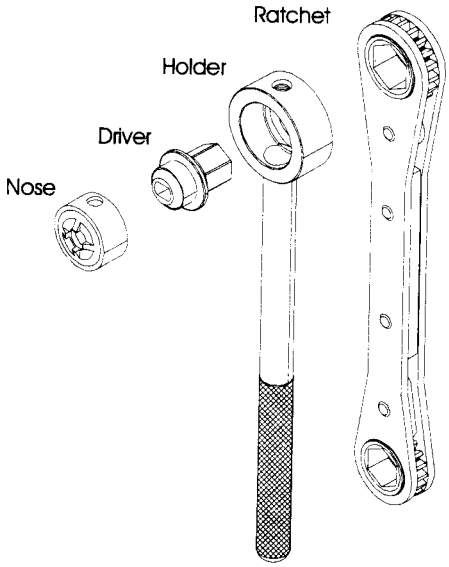


**How To Order:**
- Determine the type (flush, protruding, reduced flush) and the size of the fastener being used.
- Refer to the table below to select the correct part number for the tool needed.

Example: **HW5-BF**
Part Number Includes
- HW401 Ratchet
- HW402 Holder
- HN5-BF Nose Adapter
- HW5-BF Wrench Adapter

| Dia. | Composi-Lok Series | Complete Assembly | Driver | Nose | Ratchet | Holder |
|---|---|---|---|---|---|---|
| 5/32 | flush - 5 | HWF5 - BF | HW5 - BF | HN5 - BF | HW101 | HW102 |
| 3/16 | flush - 6 | HWF6 - BF | HW6 - BF | HN6 - BF | | |
| 7/32 | flsuh - 7 | HWF7 - BF | HW7 - BF | HN7 - BF | HW401 | HW402 |
| 1/4 | flush - 8 | HWF8 - BF | HW8 - BF | HN8 - BF | | |
| 9/32 | flush - 9 | HWF9 - BF | HW9 - BF | HN9 - BF | | |
| 5/16 | flush - 10 | HWF10 - BF | HW10 - BF | HN10 - BF | | |
| 11/32 | flush - 11 | HWF11 - BF | HW11 - BF | HN11 - BF | | |
| 3/8 | flush - 12 | HWF12 - BF | HW12 - BF | HN12 - BF | | |
| 5/32 | protruding - 5 | HWP5 - BF | HW5 - BF | HN5P - BF | HW101 | HW102 |
| 3/16 | protruding - 6 | HWP6 - BF | HW6 - BF | HN6P - BF | | |
| 7/32 | protruding - 7 | HWP7 - BF | HW7 - BF | HN7P - BF | HW401 | HW402 |
| 1/4 | protruding - 8 | HWP8 - BF | HW8 - BF | HN8P - BF | | |
| 9/32 | protruding - 9 | HWP9 - BF | HW9 - BF | HN9P - BF | | |
| 5/16 | protruding - 10 | HWP10 - BF | HW10 - BF | HN10P - BF | | |
| 11/32 | protruding - 11 | HWP11 - BF | HW11 - BF | HN11P - BF | | |
| 3/8 | protruding - 12 | HWP12 - BF | HW12 - BF | HN12P - BF | | |
| 5/32 | reduced flush - 5 | HWT5-BF | HW5-BF | HN5T-BF | HW101 | HW102 |
| 3/16 | reduced flush - 6 | HWT6-BF | HW6-BF | HN6T-BF | | |
| 7/32 | reduced flsuh - 7 | HWT7-BF | HW7-BF | HN7T-BF | HW401 | HW402 |
| 1/4 | reduced flush - 8 | HWT8-BF | HW8-BF | HN8T-BF | | |
| 9/32 | reduced flush - 9 | HWT9-BF | HW9-BF | HN9T-BF | | |
| 5/16 | reduced flush - 10 | HWT10-BF | HW10-BF | HN10T-BF | | |
| 11/32 | reduced flush - 11 | HWT11-BF | HW11-BF | HN11T-BF | | |
| 3/8 | reduced flush - 12 | HWT12-BF | HW12-BF | HN12T-B | | |

# Composi-Lok
## Blind Fastener Tools

### Composi-Lok
### Hand Torque Adapter

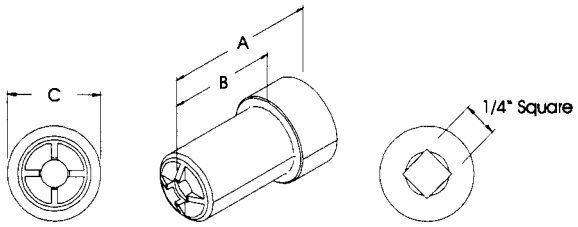


| Dia. | Composi-Lok Series | Torque Adapter | Torque (in lbs) |
|---|---|---|---|
| 5/32 | flush - 05 | TOR1652-BF | 4.00 |
| 3/16 | flush - 06 | TOR2002-BF | 6.00 |
| 7/32 | flush - 07 | TOR2202-BF | Contact Fastener Mfg. |
| 1/4 | flush - 08 | TOR2602-BF | 10.00 |
| 9/32 | flush - 09 | TOR2802-BF | Contact Fastener Mfg. |
| 5/16 | flush - 10 | TOR3122-BF | 20.00 |
| 11/32 | flush - 11 | TOR3402-BF | Contact Fastener Mfg. |
| 3/8 | flush - 12 | TOR3702-BF | 30.0 |
| 5/32 | protruding - 05 | TOR1652P - BF | 4.00 |
| 3/16 | protruding - 06 | TOR2002P - BF | 6.00 |
| 7/32 | protruding - 07 | TOR2202P - BF | Contact Fastener Mfg. |
| 1/4 | protruding - 08 | TOR2602P - BF | 10.00 |
| 9/32 | protruding - 09 | TOR2802P - BF | Contact Fastener Mfg. |
| 5/16 | protruding - 10 | TOR3122P - BF | 20.00 |
| 11/32 | protruding - 11 | TOR3402P - BF | Contact Fastener Mfg. |
| 3/8 | protruding - 12 | TOR3702P - BF | 30.0 |
| 5/32 | reduced flush - 05 | TOR1652T-BF | 4.00 |
| 3/16 | reduced flush - 06 | TOR2002T-BF | 6.00 |
| 7/32 | reduced flush - 07 | TOR2202T-BF | Contact Fastener Mfg. |
| 1/4 | reduced flush - 08 | TOR2602T-BF | 10.00 |
| 9/32 | reduced flush - 09 | TOR2802T-BF | Contact Fastener Mfg. |
| 5/16 | reduced flush - 10 | TOR3122T-BF | 20.00 |
| 11/32 | reduced flush - 11 | TOR3402T-BF | Contact Fastener Mfg. |
| 3/8 | reduced flush - 12 | TOR3702T-BF | 30.0 |

### Composi-Lok
### Hand Drill-Out

**How To Order:**
- Select the fastener *type* (flush, protruding, reduced flush) and *size* being used.
- Select the appropriate tool part number from the table

Nose Adapter



| Dia. | Visu-Lok Series | Hand Drill Out | Drill Size |
|---|---|---|---|
| 5/32 | flush - 5 | HDO1652 | 9/64 |
| 3/16 | flush - 6 | HDO2002 | 5/32 |
| 1/4 | flush - 8 | HDO2602 | 13/64 |
| 5/16 | flush - 10 | HDO3122 | 1/4 |
| 3/8 | flush - 12 | HDO3752 | 9/32 |
| 5/32 | protruding - 5 | HDO1652P | 9/64 |
| 3/16 | protruding - 6 | HDO2002P | 5/32 |
| 1/4 | protruding - 8 | HDO2602P | 13/64 |
| 5/16 | protruding - 10 | HDO3122P | 1/4 |
| 3/8 | protruding - 12 | HDO3752P | 9/32 |
| 5/32 | reduced flush - 5 | HDO1652 | 9/64 |
| 3/16 | reduced flush - 6 | HDO2002 | 5/32 |
| 1/4 | reduced flush - 8 | HDO2602 | 13/64 |
| 5/16 | reduced flush - 10 | HDO3122 | 1/4 |
| 3/8 | reduced flush - 12 | HDO3752 | 9/32 |

# Composi-Lok
## Blind Fastener Tools

### Composi-Lok
### Break-Off Gauges

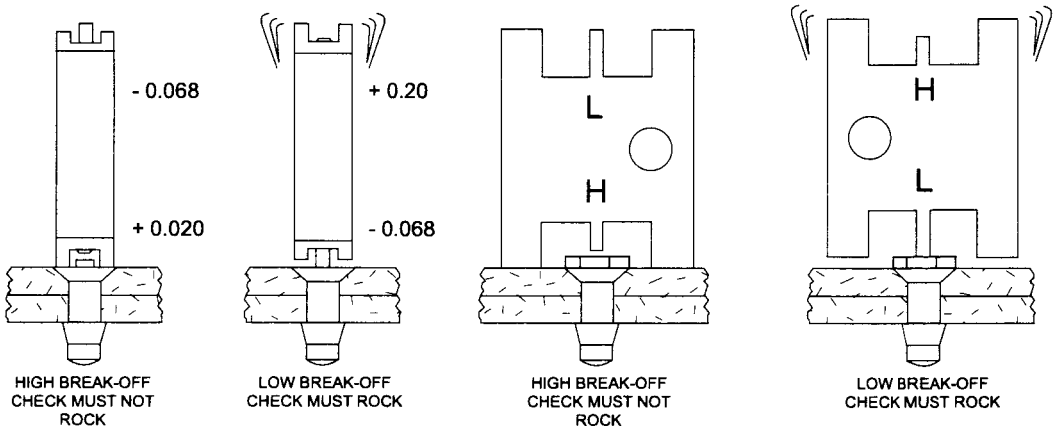


| Dia | Composi-Lok Series | Leaf Gauges | Round Gauges | Break-Off Limits |
|---|---|---|---|---|
| 5/32 | MBF2010-05 | LFP7-CL | LF8-F5 | +.103 / +.000 |
| 5/32 | MBF2011-05 | LFP7-CL | LF8-F5 | +.103 / +.000 |
| 5/32 | MBF2012-05 | LFP7-CL | LF8-F5 | +.103 / +.000 |
| 5/32 | MBF2013-05 | LFP7-CL | LF8-F5 | +.103 / +.000 |
| 3/16 | MBF2010-06 | LFP7-CL | LF8-F6 | +.103 / +.000 |
| 3/16 | MBF2011-06 | LFP7-CL | LF8-F6 | +.103 / +.000 |
| 3/16 | MBF2012-06 | LFP7-CL | LF8-F6 | +.103 / +.000 |
| 3/16 | MBF2013-06 | LFP7-CL | LF8-F6 | +.103 / +.000 |
| 7/32 | MBF2010-07 | LFP7-CL | LF8-F7 | +.103 / +.000 |
| 7/32 | MBF2011-07 | LFP7-CL | LF8-F7 | +.103 / +.000 |
| 7/32 | MBF2012-07 | LFP7-CL | LF8-F7 | +.103 / +.000 |
| 7/32 | MBF2013-07 | LFP7-CL | LF8-F7 | +.103 / +.000 |
| 1/4 | MBF2010-08 | LFP7-CL | LF8-F8 | +.103 / +.000 |
| 1/4 | MBF2011-08 | LFP7-CL | LF8-F8 | +.103 / +.000 |
| 1/4 | MBF2012-08 | LFP7-CL | LF8-F8 | +.103 / +.000 |
| 1/4 | MBF2013-08 | LFP7-CL | LF8-F8 | +.103 / +.000 |
| 9/32 | MBF2010-09 | LFP7-CL | LF8-F9 | +.103 / +.000 |
| 9/32 | MBF2011-09 | LFP7-CL | LF8-F9 | +.103 / +.000 |
| 9/32 | MBF2012-09 | LFP7-CL | LF8-F9 | +.103 / +.000 |
| 9/32 | MBF2013-09 | LFP7-CL | LF8-F9 | +.103 / +.000 |
| 5/16 | MBF2010-10 | LFP7-CL | LF8-F10 | +.103 / +.000 |
| 5/16 | MBF2011-10 | LFP7-CL | LF8-F10 | +.103 / +.000 |
| 5/16 | MBF2012-10 | LFP7-CL | LF8-F10 | +.103 / +.000 |
| 5/16 | MBF2013-10 | LFP7-CL | LF8-F10 | +.103 / +.000 |
| 11/32 | MBF2010-11 | LFP7-CL | LF8-F11 | +.103 / +.000 |
| 11/32 | MBF2011-11 | LFP7-CL | LF8-F11 | +.103 / +.000 |
| 11/32 | MBF2012-11 | LFP7-CL | LF8-F11 | +.103 / +.000 |
| 11/32 | MBF2013-11 | LFP7-CL | LF8-F11 | +.103 / +.000 |
| 3/8 | MBF2010-12 | LFP7-CL | LF8-F12 | +.103 / +.000 |
| 3/8 | MBF2011-12 | LFP7-CL | LF8-F12 | +.103 / +.000 |
| 3/8 | MBF2012-12 | LFP7-CL | LF8-F12 | +.103 / +.000 |
| 3/8 | MBF2013-12 | LFP7-CL | LF8-F12 | +.103 / +.000 |

# Composi-Lok
## Blind Fastener Tools

## Composi-Lok
## Grip Scales

### Grip Scale Part #: LFCLG-1 & LFCLG-2

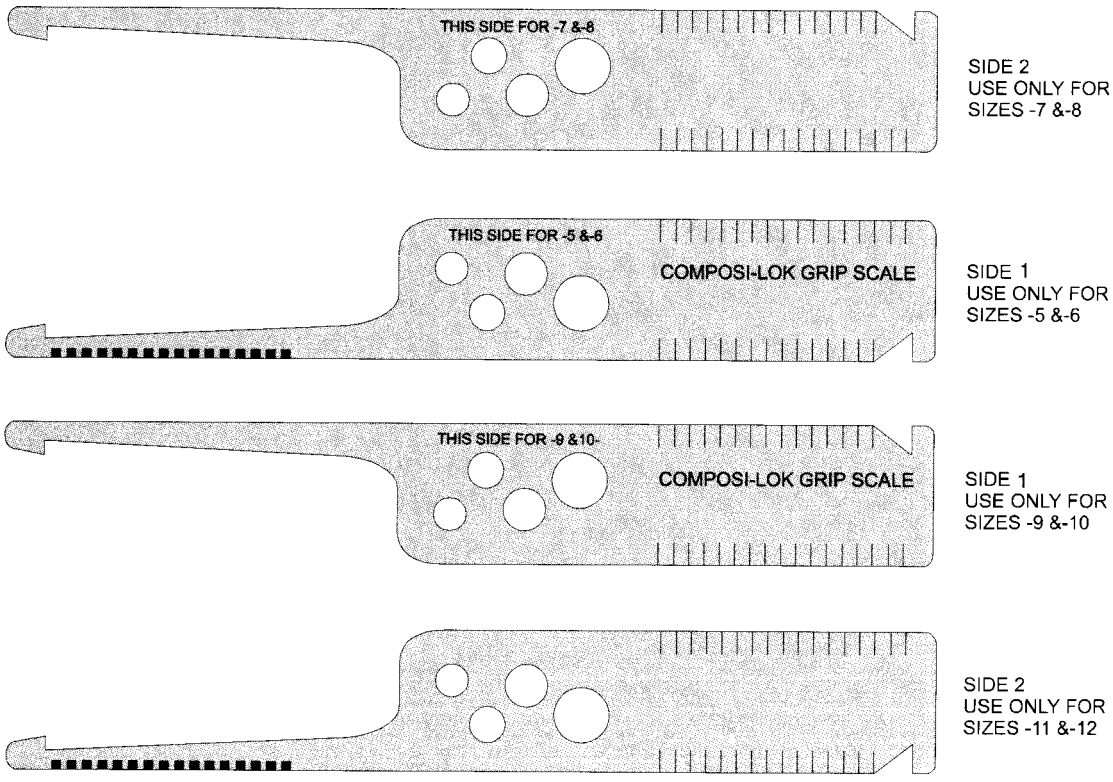


**Selection of Grip Length**

In measuring hole depth take reading where the skin surface meets the number or line on gauge. If directly on a line use either the indicated grip or the next longer grip.

In cases where there a tappered sheet condition exits, determine grip length at the hole centerline. The taper must not exceed 7° to ensure the proper performance of the fastener.

# Visu-Lok II

## Blind Fastener Tools

## Universal Nose Tip™ System for Installing Drive-Nut Type Fasteners

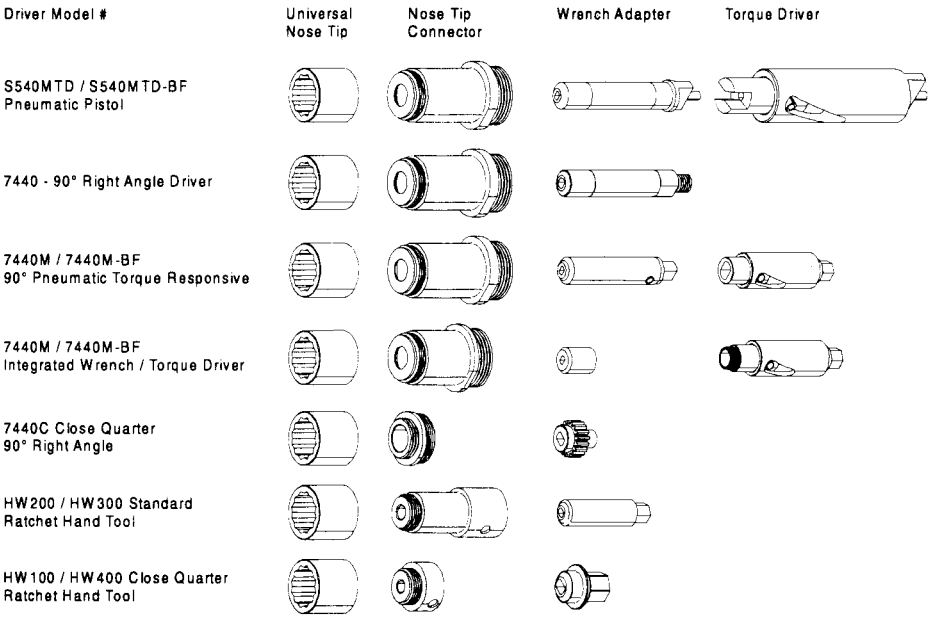


### Universal Interchangeable Nose Tips

Installation tools have been simplified in the "DRIVE NUT" fastener system in both Visu-Lok II® and Composi-Lok II®.

LOK-FAST has further simplified the tooling with UNIVERSAL NOSE TIP™. Now, for a given size range any nose tip may be interchangeable with any driver.

An installation tool consists of a driver and an adapter assembly. The adapter assembly is comprised of a nose adapter to engage the corebolt through rotation to clamp-up and break-off. In most cases, for a given driver, the LOK-FAST UNIVERSAL NOSE TIP™ SYSTEM uses only three complete nose adapters for all the fastener head styles, and for the complete range of sizes from 5/32" to 3/8".

### Two Part Nose Adapter

The nose adapter is now a two piece design consisting of the Universal Nose Tip™ and the Nose Tip Connector™. The nose tip engages the fastener drivenut, and the nose tip is threaded onto the connector to form a complete installation tool. The two piece design allows interchanging of the nose tips among all driver configurations and further allows interchangeability between Visu-Lok II® and Composi-Lok II® installation tools. The nose tip may be removed with a standard allen wrench using clockwise rotation.

The pictorial chart on the proceeding page is an illustration of the Universal Nose Tip™ System.

Universal Nose Tip™ is a Trademark of LOK-FAST
Nose TipTM Connector™ is a Trademark of LOK-FAST

# Visu-Lok II

## Blind Fastener Tools

### Drive-Nut Interchangeablity

| Dia. | Fastener | Pneumatic | Standard Right Angle | Torq. Resp. Right Angle | Close Qtr. Right Angle | Standard Hand Tool | Close Qtr. Hand Tool |
|---|---|---|---|---|---|---|---|
| -5 | VLII / CLII | | | | | | |
| -6 | VLII / CLII | | | | | | |
| -7 | CLII only | | | | | | |
| -8 | VLII / CLII | | | | | | |
| -9 | CLII only | | | | | | |
| -10 | VLII / CLII | | | | | | |
| -11 | CLII only | | | | | | |
| -12 | VLII / CLII | | | | | | |

NOTE: VLII - represents Visu-Lok II®
CLII - represents Composi-Lok II®

Composi-LokII® adapter assemblies may install Visu-LokII®
Adapter assemblies identical for both Visu-LokII® and Composi-LokII®

Visu-Lok II® and Composi-Lok II® fasteners have certain common driving dimensions. The drivenuts are identical for both fasteners. In the -8, -10, and -12 diameter fasteners the wrench flats are common to both fastener types. In the -5 and -6 diameters, the wrench flats are not common to Visu-Lok II® and Composi-Lok II®. Therefore, wrench adapters used to install these fasteners are **not** interchangeable.

The larger blind side "footprint" of Composi-Lok II® is accomplished through the use of a longer sleeve and corebolt. The close quarter installation tools permit the corebolt to pass completely through the wrench. Therefore, in the -8, -10, and -12 diameters, close quarter installation is 100% interchangeable. In all other installation tools, the corebolt does not pass completely through the wrench. The wrench adapter (and consequently, the nose adapter) must be longer to install the Composi-Lok II®.

In the common wrench-flat diameters, the longer installation tooling (Composi-Lok II®) may be used to install the Visu-Lok II®, but the tooling for Visu-Lok II® may not be used for Composi-Lok II® installations.

If it is desired to standardize on one system of adapters for use with both types of fasteners, Lok-Fast provides a longer wrench adapter for the -5 and -6 Visu-Lok II® to be used with the Composi-Lok II® nose adapters.

The opposite chart illustrates the interchangeability. The two tooling systems are described in separate sections of this catalog. The new wrench adapters for Visu-Lok II® sizes -5 and -6 are contained only in the section on Visu-Lok II®. For these wrench adapters, selection of the corresponding Composi-Lok II® nose adapter is made by referring to the same page in the section on Composi-Lok tooling.

# Visu-Lok II

## Blind Fastener Tools

## Pneumatic Pistol Driver Assembly for Visu-Lok II®

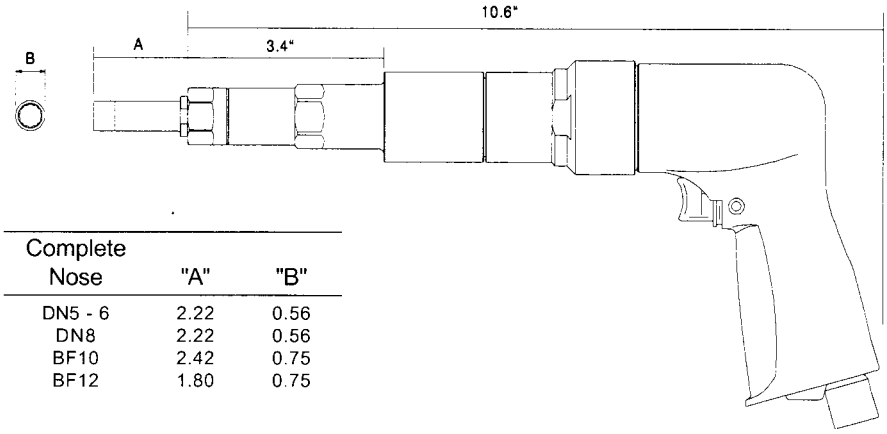


| Complete Nose | "A" | "B" |
|---|---|---|
| DN5 - 6 | 2.22 | 0.56 |
| DN8 | 2.22 | 0.56 |
| BF10 | 2.42 | 0.75 |
| BF12 | 1.80 | 0.75 |

**How To Order:**

1. Select the diameter and match with the Table below
2. From the corresponding row select the complete assembly part number or the parts needed.

Example: **DN8AA**

Part Number Includes

- S540MTD Pneumatic Pistol Driver
- MTD302 Master Torque Driver
- DNC8 Nose Tip Connector
- DNUT5-6 Universal Nose Tip
- TD2601 Wrench Adapter

| Dia. | Visu-Lok II Series | Complete Assembly | Pneumatic Pistol | Adapter Assembly | Complete Nose Adapter | Nose Tip Connector | Universal Nose Tip | Wrench Adapter | VLII Wrench for CLII Nose |
|---|---|---|---|---|---|---|---|---|---|
| 5/32 | PLT5000-5-( ) | DN5AA | | DN5A | DN5-6 | DNC5-6 | DNUT5-6 | TD1651 | TD1651-VL |
| 3/16 | PLT5000-6-( ) | DN6AA | | DN6A | DN5-6 | DNC5-6 | DNUT5-6 | TD2001 | TD2001-VL |
| 1/4 | PLT5000-8-( ) | DN8AA | S540MTD | DN8A | DN8 | DNC8 | DNUT8 | TD2601 | |
| 5/16 | PLT5000-10-( ) | DN10AA | | DN10A | DN10 | DNC10 | DNUT12 | TD3121 | |
| 3/8 | PLT5000-12-( ) | DNPT12AA | | DNPT12A | DNPT12 | DNCPT12 | DNUT12 | PT3751 | |

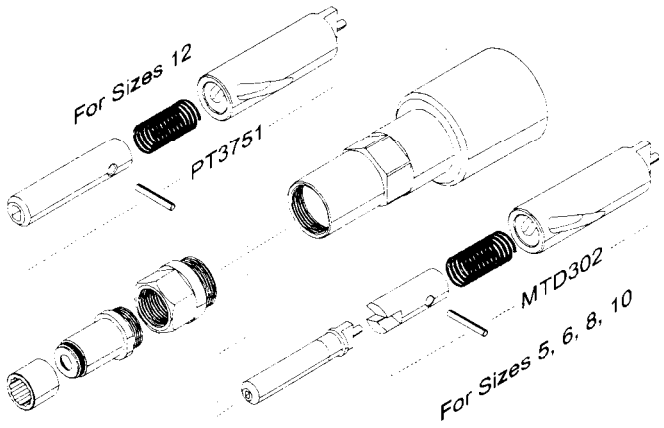


| Technical Data | |
|---|---|
| Operating Preasure | 90 PSI |
| Torque Output | 32.5 lbs |
| Stall Torque | 32.5 lbs |
| Motor Speed | 540 rpm |
| Air Consumption (at free speed) | 28 cfm |
| Horse Power Rating | 0.7 |
| Weight | 3.5 lbs |

# Visu-Lok II

## Blind Fastener Tools

## Pneumatic Right Angle for Visu-Lok II®

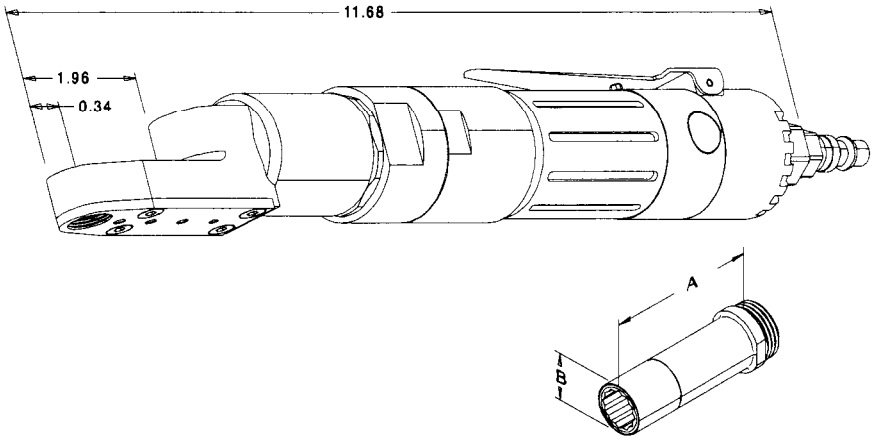


**How To Order:**
1. Select the diameter and match with the Table below
2. From the corresponding row select the complete assembly part number or the parts needed.

Example: **DNR8AA**
Part Number Includes
- 7440 Pneumatic Wrench Driver
- DNC8 Nose Tip Connector
- DNUT8 Universal Nose Tip
- PW4601 Wrench Adapter

| Dia. | Visu-Lok II Series | Complete Assembly | Pneumatic Pistol | Adapter Assembly | Complete Nose Adapter | Nose Tip Connector | Universal Nose Tip | Wrench Adapter | VLII Wrench for CLII Nose |
|---|---|---|---|---|---|---|---|---|---|
| 5/32 | PLT5000-5-( ) | DNR5AA | 7440 | DNR5A | DN5-6 | DNC5-6 | DNUT5-6 | PW4651 | PW4651-VL |
| 3/16 | PLT5000-6-( ) | DNR6AA | | DNR6A | DN5-6 | DNC5-6 | DNUT5-6 | PW4001 | PW4001-VL |
| 1/4 | PLT5000-8-( ) | DNR8AA | | DNR8A | DN8 | DNC8 | DNUT8 | PW4601 | |
| 5/16 | PLT5000-10-( ) | DNR10AA | | DNR10A | DN10 | DNC10 | DNUT12 | PW4121 | |

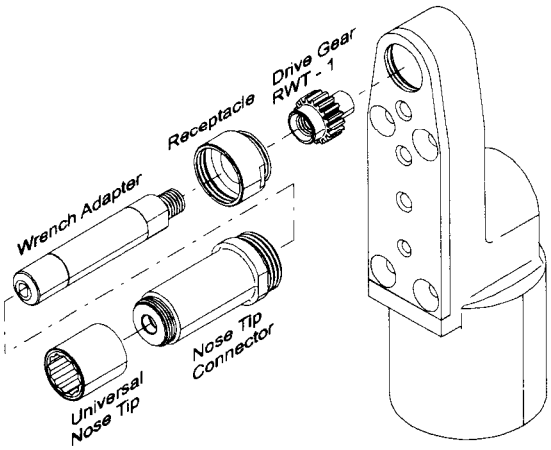


| Technical Data | |
|---|---|
| Operating Preasure | 90 PSI |
| Torque Output | 108 in lbs |
| Stall Torque | 10 ft lbs |
| Motor Speed | 500 rpm |
| Air Consumption (at free speed) | 18 cfm |
| Horse Power Rating | 0.33 |
| Weight | 3.5 lbs |

# Visu-Lok II

## Blind Fastener Tools

## Pneumatic Right Angle Torque Responsive Adapter for Visu-Lok II®

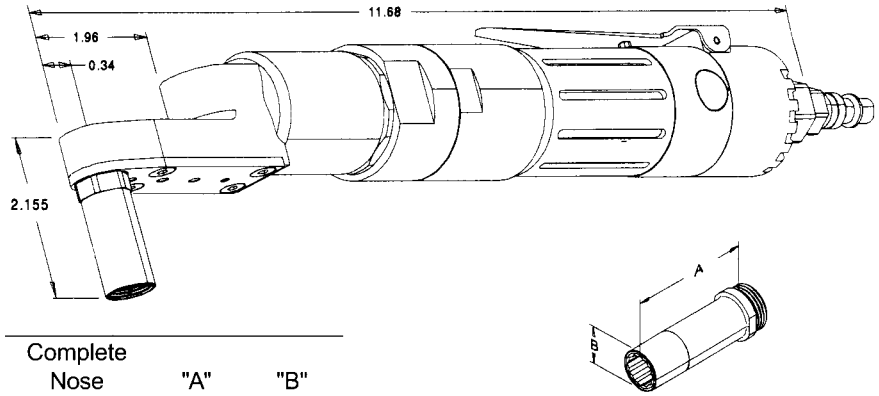


| Complete Nose | "A" | "B" |
|---|---|---|
| DNRT5 - 6 | 2.22 | 0.56 |
| DNRT8 | 2.22 | 0.56 |
| DNRT10 | 2.42 | 0.75 |

**How To Order:**

1. Select the diameter and match with the Table below
2. From the corresponding row select the complete assembly part number or the parts needed.

Example: **DNRT5AA**

Part Number Includes

- 7440M Pneumatic Wrench Driver
- DNCRT5-6 Nose Tip Connector
- DNUT5-6 Universal Nose Tip
- TD5651 Wrench Adapter

| Dia. | Visu-Lok II Series | Complete Assembly | Pneumatic Pistol | Adapter Assembly | Complete Nose Adapter | Nose Tip Connector | Universal Nose Tip | Wrench Adapter | VLII Wrench for CLII Nose |
|---|---|---|---|---|---|---|---|---|---|
| 5/32 | PLT5000-5-( ) | DNRT5AA | 7440M | DNRT5A | DNRT5-6 | DNCRT5-6 | DNUT5-6 | TD5651 | TD5651-VL |
| 3/16 | PLT5000-6-( ) | DNRT6AA | | DNRT6A | DNRT5-6 | DNCRT5-6 | DNUT5-6 | TD5001 | TD5001-VL |
| 1/4 | PLT5000-8-( ) | DNRT8AA | | DNRT8A | DNRT8 | DNCRT8 | DNUT8 | TD5601 | |
| 5/16 | PLT5000-10-( ) | DNRT10AA | | DNRT10A | DNRT10 | DNCRT10 | DNUT12 | TD5121 | |

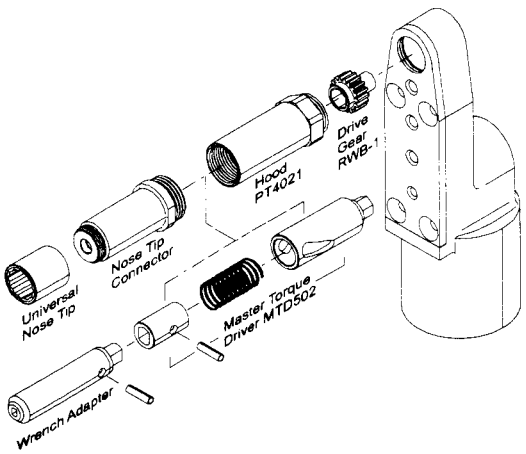


| Technical Data | |
|---|---|
| Operating Preasure | 90 PSI |
| Torque Output | 108 in lbs |
| Stall Torque | 10 ft lbs |
| Motor Speed | 500 rpm |
| Air Consumption (at free speed) | 18 cfm |
| Horse Power Rating | 0.33 |
| Weight | 3.5 lbs |

# Visu-Lok II

## Blind Fastener Tools

### Pneumatic Right Angle w/ Integrated Socket Torque Responsive Adapter for Visu-Lok II®

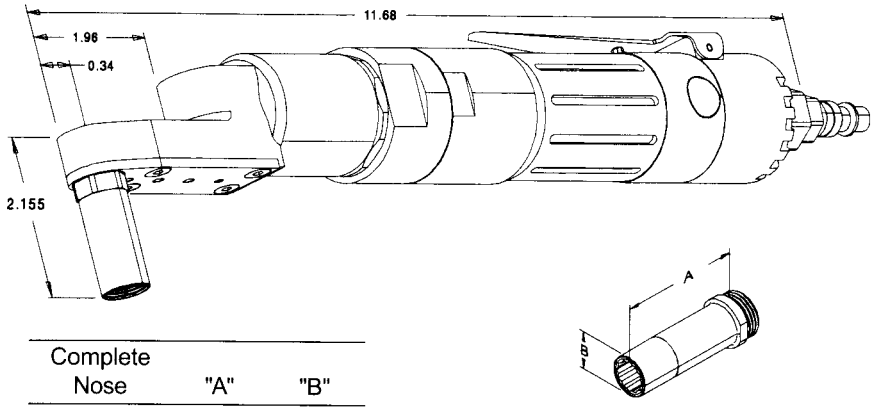


| Complete Nose | "A" | "B" |
|---|---|---|
| DNRPT5 - 6 | 1.33 | 0.56 |
| DNRPT8 | 1.33 | 0.56 |
| DNRPT10 | 1.53 | 0.75 |

**How To Order:**

1. Select the diameter and match with the Table below
2. From the corresponding row select the complete assembly part number or the parts needed.

Example: **DNRPT5AA**

Part Number Includes

- 7440M Pneumatic Wrench Driver
- DNCRPT5-6 Nose Tip Connector
- DNUT5-6 Universal Nose Tip
- UPTRW-5 Complete Wrench/Driver
- UWT-5 Wrench Tip

| Dia. | Visu-Lok II Series | Complete Assembly | Pneumatic Pistol | Adapter Assembly | Complete Nose Adapter | Nose Tip Connector | Universal Nose Tip | Wrench Adapter | Wrench Tip |
|---|---|---|---|---|---|---|---|---|---|
| 5/32 | PLT5000-5-( ) | DNRPT5AA | 7440M | DNRPT5A | DNPT5-6 | DNCRPT5-6 | DNUT5-6 | UPTRW-5 | UWT-5 |
| 3/16 | PLT5000-6-( ) | DNRPT6AA | | DNRPT6A | DNPT5-6 | DNCRPT5-6 | DNUT5-6 | UPTRW-6 | UWT-6 |
| 1/4 | PLT5000-8-( ) | DNRPT8AA | | DNRPT8A | DNPT8 | DNCRPT8 | DNUT8 | UPTRW-8 | UWT-8 |
| 5/16 | PLT5000-10-( ) | DNRPT10AA | | DNRPT10A | DNPT10 | DNCRPT10 | DNUT12 | UPTRW-10 | UWT-10 |

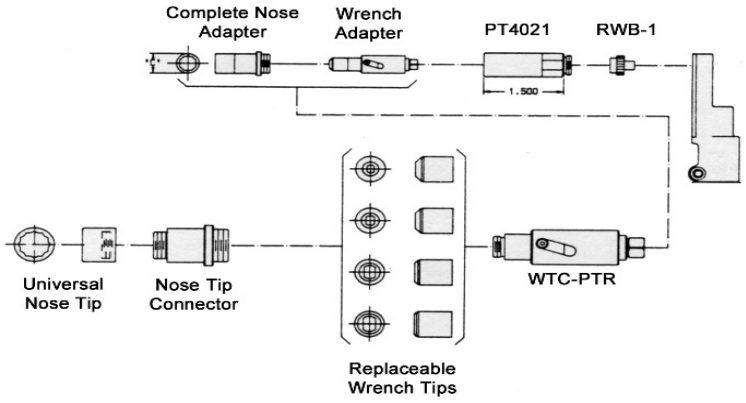


| Technical Data | |
|---|---|
| Operating Preasure | 90 PSI |
| Torque Output | 108 in lbs |
| Stall Torque | 10 ft lbs |
| Motor Speed | 500 rpm |
| Air Consumption (at free speed) | 18 cfm |
| Horse Power Rating | 0.33 |
| Weight | 3.5 lbs |

# Visu-Lok II

## Blind Fastener Tools

### Pneumatic Right Angle Close Quarter for Visu-Lok II®

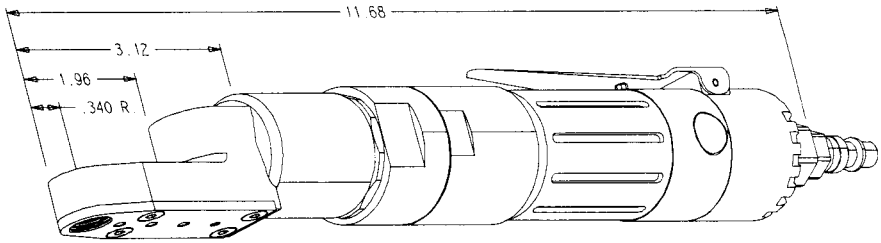


| Complete Nose | "A" | "B" |
|---|---|---|
| DNRC5 - 6 | 0.53 | 0.56 |
| DNRC8 | 0.53 | 0.56 |
| BFRC10 | 0.73 | 0.75 |

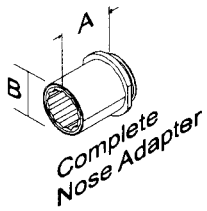


**How To Order:**

1. Select the diameter and match with the Table below
2. From the corresponding row select the complete assembly part number or the parts needed.

Example: **DRNRC6-AA**
Part Number Includes
- 7440C Pneumatic Wrench Driver
- DNRC5-6 Nose Tip Connector
- DNUT5-6 Universal Nose Tip
- RW5-1 Wrench Gear

| Dia. | Visu-Lok II Series | Complete Assembly | Pneumatic Pistol | Adapter Assembly | Complete Nose Adapter | Nose Tip Connector | Universal Nose Tip | Wrench Adapter |
|---|---|---|---|---|---|---|---|---|
| 5/32 | PLT5000-5-( ) | DNRC5AA | 7440C | DNRC5A | DNRC5-6 | DNCRC5-6 | DNUT5-6 | RW5-1 |
| 3/16 | PLT5000-6-( ) | DNRC6AA | | DNRC6A | DNRC5-6 | DNCRC5-6 | DNUT5-6 | RW6-1 |
| 1/4 | PLT5000-8-( ) | DNRC8AA | | DNRC8A | DNRC8 | DNCRC8 | DNUT8 | RW8-1 |
| 5/16 | PLT5000-10-( ) | DNRC10AA | | DNRC10A | DNRC10 | DNCRC10 | DNUT12 | RW10-1 |

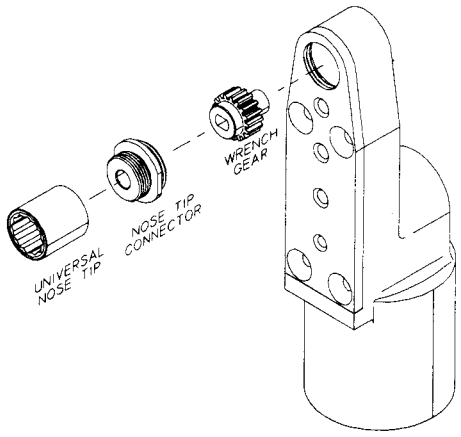


| Technical Data | |
|---|---|
| Operating Preasure | 90 PSI |
| Torque Output | 108 in lbs |
| Stall Torque | 10 ft lbs |
| Motor Speed | 500 rpm |
| Air Consumption (at free speed) | 18 cfm |
| Horse Power Rating | 0.33 |
| Weight | 3.5 lbs |

# Visu-Lok II

## Blind Fastener Tools

### Ratchet Hand Tool for Visu-Lok II®

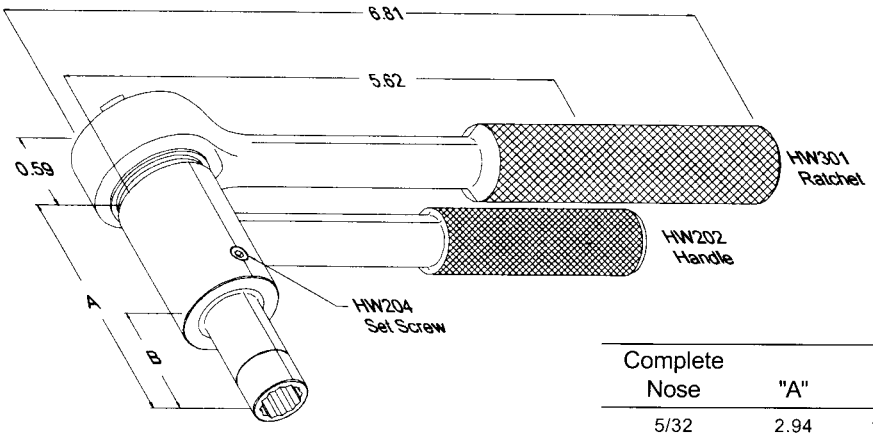


| Complete Nose | "A" | "B" | "C" |
|---|---|---|---|
| 5/32 | 2.94 | 1.50 | 0.56 |
| 3/16 | 2.94 | 1.50 | 0.56 |
| 7/32 | 3.07 | 1.62 | 0.56 |
| 1/4 | 3.07 | 1.62 | 0.56 |
| 5/16 | 3.14 | 1.70 | 0.75 |
| 3/8 | 3.16 | 1.72 | 0.75 |

**How To Order:**

1. Select the diameter and match with the Table on this page.
2. From the corresponding row select the complete assembly part number or the parts needed.

Example: **DNH5AA**

Part Number Includes

- HW300 Ratchet Wrench
- HW202 Holder
- DNCH5-6 Nose Tip Connector
- DNUT5-6 Universal Nose Tip
- HW1651 Wrench Gear

| Dia. | Visu-Lok II Series | Complete Assembly | Pneumatic Pistol | Adapter Assembly | Complete Nose Adapter | Nose Tip Connector | Universal Nose Tip | Wrench Adapter | VLII Wrench FOR CLII Nose |
|---|---|---|---|---|---|---|---|---|---|
| 5/32 | PLT5000-5-( ) | DNH5AA | | DNH5A | DNH5-6 | DNCH5-6 | DNUT5-6 | HW1651 | HW1651-VL |
| 3/16 | PLT5000-6-( ) | DNH6AA | | DNH6A | DNH5-6 | DNCH5-6 | DNUT5-6 | HW2001 | HW2001-VL |
| 1/4 | PLT5000-8-( ) | DNH8AA | HW300 | DNH8A | DNH8 | DNCH8 | DNUT8 | HW2601 | |
| 5/16 | PLT5000-10-( ) | DNH10AA | | DNH10A | DNH10 | DNCH10 | DNUT12 | HW3121 | |
| 3/8 | PLT5000-12-( ) | DNH12AA | | DNH12A | DNH12 | DNCH12 | DNUT12 | HW3751 | |

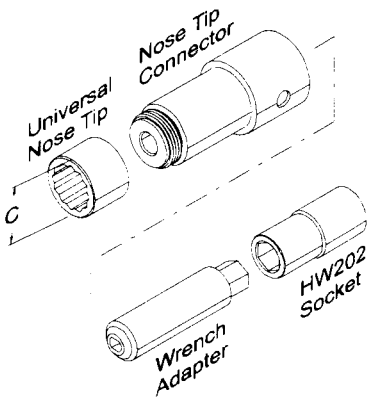

# Visu-Lok II

## Blind Fastener Tools

### Ratchet Hand Tool Close Quarter for Visu-Lok II®

| Complete Nose | "A" | "B" | "C" |
|---|---|---|---|
| 5/32 | 0.65 | 0.51 | 0.56 |
| 3/16 | 0.65 | 0.51 | 0.56 |
| 7/32 | 0.80 | 0.46 | 0.56 |
| 1/4 | 0.80 | 0.46 | 0.56 |
| 5/16 | 0.80 | 067 | 0.75 |
| 3/8 | 0.80 | 0.67 | 0.75 |

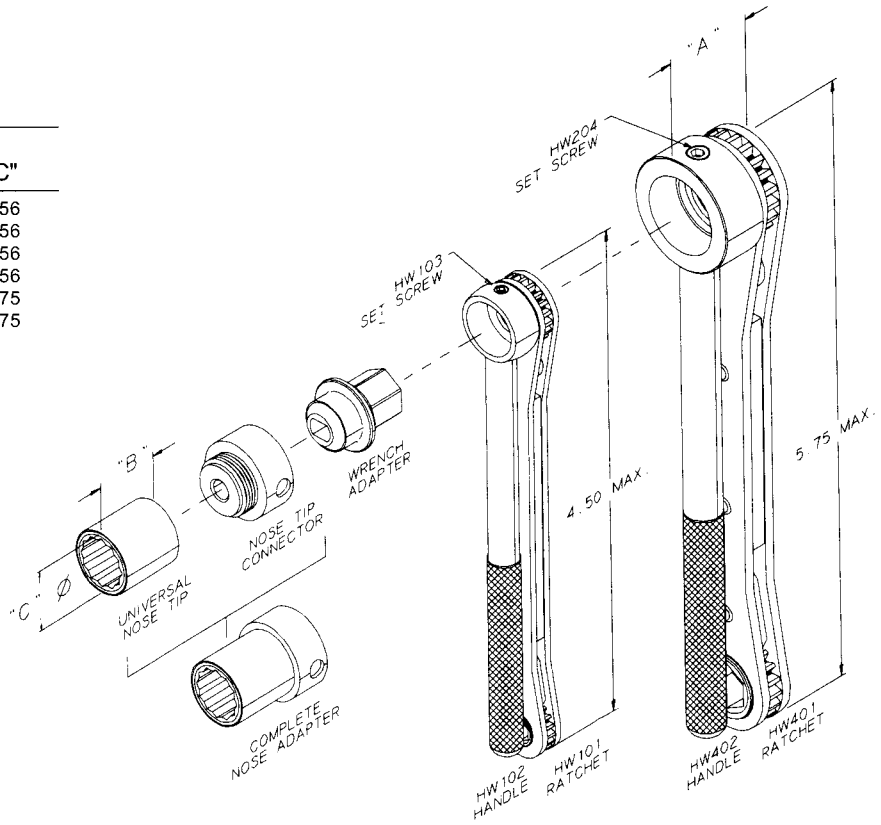


**How To Order:**

1. Select the diameter and match with the Table on this page.
2. From the corresponding row select the complete assembly part number or the parts needed.

Example: **DNHC5AA**

Part Number Includes

- HW100 Ratchet Wrench
- HW102 Holder
- DNHC5-6 Nose Tip Connector
- DNUT5-6 Universal Nose Tip
- HW5 Wrench Gear

| Dia. | Visu-Lok II Series | Complete Assembly | Pneumatic Pistol | Adapter Assembly | Complete Nose Adapter | Nose Tip Connector | Universal Nose Tip | Wrench Adapter |
|---|---|---|---|---|---|---|---|---|
| 5/32 | PLT5000-5-( ) | DNHC5AA | HW100 | DNHC5A | DNHC5-6 | DNCHC5-6 | DNUT5-6 | HW5 |
| 3/16 | PLT5000-6-( ) | DNHC6AA | HW100 | DNHC6A | DNHC5-6 | DNCHC5-6 | DNUT5-6 | HW8 |
| 1/4 | PLT5000-8-( ) | DNHC8AA | HW400 | DNHC8A | DNHC8 | DNCHC8 | DNUT8 | HW8 |
| 5/16 | PLT5000-10-( ) | DNHC10AA | HW400 | DNHC10A | DNHC12 | DNCHC12 | DNUT12 | HW10 |
| 3/8 | PLT5000-12-( ) | DNHC12AA | HW400 | DNHC12A | DNHC12 | DNCHC12 | DNUT12 | HW12 |

# Visu-Lok II
## Blind Fastener Tools

## Visu-Lok
## Grip Scales

### Grip Scale Part #: LFVLG-1

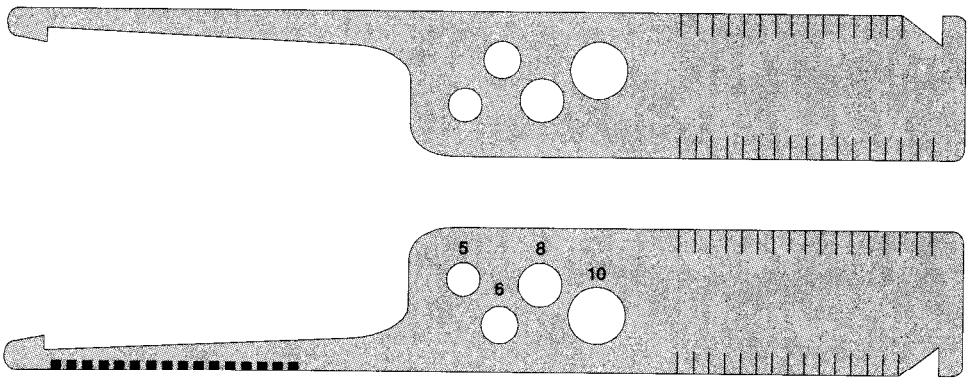


**Selection of Grip Length**

In measuring hole depth take reading where the skin surface meets the number or line on gauge. If directly on a line use either the indicated grip or the next longer grip.

In cases where there a tappered sheet condition exits, determine grip length at the hole centerline. The taper must not exceed 7° to ensure the proper performance of the fastener.

# Composi-Lok II
## Blind Fastener Tools

## Universal Nose Tip™ System for Installing Drive-Nut Type Fasteners

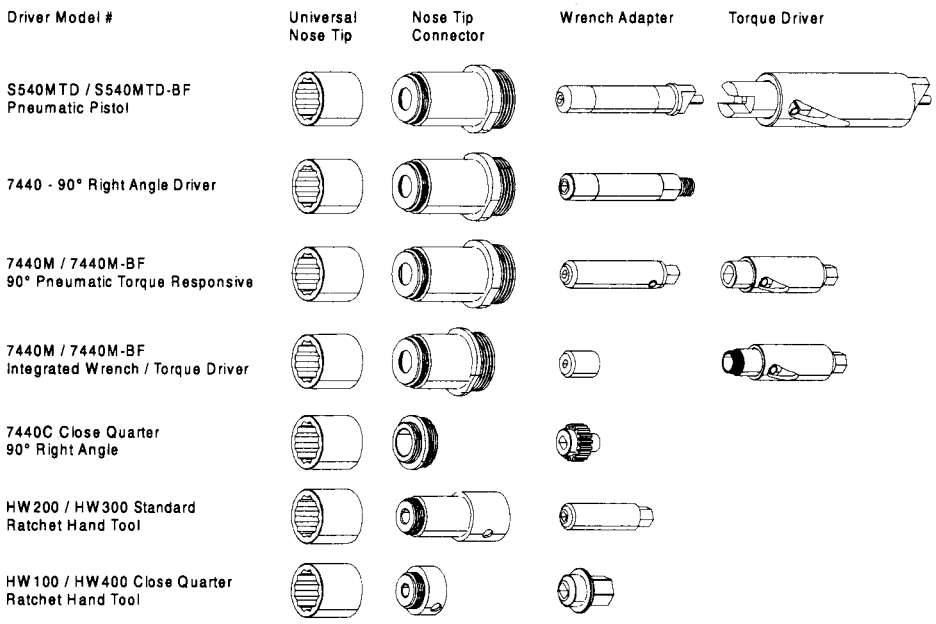


### Universal Interchangeable Nose Tips

Installation tools have been simplified in the "DRIVE NUT" fastener system in both Visu-Lok II® and Composi-Lok II®.

LOK-FAST has further simplified the tooling with UNIVERSAL NOSE TIP™. Now, for a given size range any nose tip may be interchangeable with any driver.

An installation tool consists of a driver and an adapter assembly. The adapter assembly is comprised of a nose adapter to engage the corebolt through rotation to clamp-up and break-off. In most cases, for a given driver, the LOK-FAST UNIVERSAL NOSE TIP™ SYSTEM uses only three complete nose adapters for all the fastener head styles, and for the complete range of sizes from 5/32" to 3/8".

### Two Part Nose Adapter

The nose adapter is now a two piece design consisting of the Universal Nose Tip™ and the Nose Tip Connector™. The nose tip engages the fastener drivenut, and the nose tip is threaded onto the connector to form a complete installation tool. The two piece design allows interchanging of the nose tips among all driver configurations and further allows interchangeability between Visu-Lok II® and Composi-Lok II® installation tools. The nose tip may be removed with a standard allen wrench using clockwise rotation.

The pictorial chart on the proceeding page is an illustration of the Universal Nose Tip™ System.

Universal Nose Tip™ is a Trademark of LOK-FAST
Nose TipTM Connector™ is a Trademark of LOK-FAST

# Composi-Lok II

## Blind Fastener Tools

### Drive-Nut Interchangeablity

| Dia. | Fastener | Pneumatic | Standard Right Angle | Torq. Resp. Right Angle | Close Qtr. Right Angle | Standard Hand Tool | Close Qtr. Hand Tool |
|---|---|---|---|---|---|---|---|
| -5 | VLII / CLII | | | | | | |
| -6 | VLII / CLII | | | | | | |
| -7 | CLII only | | | | | | |
| -8 | VLII / CLII | | | | | | |
| -9 | CLII only | | | | | | |
| -10 | VLII / CLII | | | | | | |
| -11 | CLII only | | | | | | |
| -12 | VLII / CLII | | | | | | |

NOTE: VLII - represents Visu-Lok II®
CLII - represents Composi-Lok II®

Composi-LokII® adapter assemblies may install Visu-LokII®
Adapter assemblies identical for both Visu-LokII® and Composi-LokII®

Visu-Lok II® and Composi-Lok II® fasteners have certain common driving dimensions. The drivenuts are identical for both fasteners. In the -8, -10, and -12 diameter fasteners the wrench flats are common to both fastener types. In the -5 and -6 diameters, the wrench flats are not common to Visu-Lok II® and Composi-Lok II®. Therefore, wrench adapters used to install these fasteners are **not** interchangeable.

The larger blind side "footprint" of Composi-Lok II® is accomplished through the use of a longer sleeve and corebolt. The close quarter installation tools permit the corebolt to pass completely through the wrench. Therefore, in the -8, -10, and -12 diameters, close quarter installation is 100% interchangeable. In all other installation tools, the corebolt does not pass completely through the wrench. The wrench adapter (and consequently, the nose adapter) must be longer to install the Composi-Lok II®.

In the common wrench-flat diameters, the longer installation tooling (Composi-Lok II®) may be used to install the Visu-Lok II®, but the tooling for Visu-Lok II® may not be used for Composi-Lok II® installations.

If it is desired to standardize on one system of adapters for use with both types of fasteners, Lok-Fast provides a longer wrench adapter for the -5 and -6 Visu-Lok II® to be used with the Composi-Lok II® nose adapters.

The opposite chart illustrates the interchangeability. The two tooling systems are described in separate sections of this catalog. The new wrench adapters for Visu-Lok II® sizes -5 and -6 are contained only in the section on Visu-Lok II®. For these wrench adapters, selection of the corresponding Composi-Lok II® nose adapter is made by referring to the same page in the section on Composi-Lok tooling.

# Composi-Lok II

## Blind Fastener Tools

## Pneumatic Pistol Driver Assembly for Composi-Lok II®

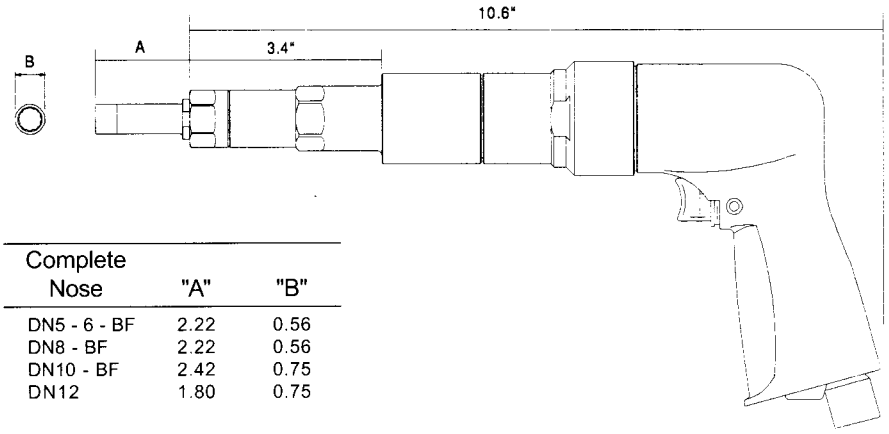


| Complete Nose | "A" | "B" |
|---|---|---|
| DN5 - 6 - BF | 2.22 | 0.56 |
| DN8 - BF | 2.22 | 0.56 |
| DN10 - BF | 2.42 | 0.75 |
| DN12 | 1.80 | 0.75 |

**How To Order:**

1. Select the diameter and match with the Table below
2. From the corresponding row select the complete assembly part number or the parts needed.

Example: **DN8AA-BF**

Part Number Includes

- S540MTD-BF Pneumatic Pistol Driver
- MTD302 Master Torque Driver
- DNC8-BF Nose Tip Connector
- DNUT8 Universal Nose Tip
- TD2601-BF Wrench Adapter

| Dia. | Fastener Size | Complete Assembly | Adapter Assembly | Nose Adapter | Nose Tip Connector | Universal Nose Tip | Wrench Adapter |
|---|---|---|---|---|---|---|---|
| 5/32 | 5-( ) | DN5AA-BF | DN5A-BF | DN5-6-BF | DNC5-6-BF | DNUT5-6 | TD1651-BF |
| 3/16 | 6-( ) | DN6AA-BF | DN6A-BF | DN5-6-BF | DNC5-6-BF | DNUT5-6 | TD2001-BF |
| 7/32 | 7-( ) | DN7AA-BF | DN7A-BF | DN8-BF | DNC8-BF | DNUT8 | TD7-BF |
| 1/4 | 8-( ) | DN8AA-BF | DN8A-BF | DN8-BF | DNC8-BF | DNUT8 | TD2601-BF |
| 9/32 | 9-( ) | DN10AA-BF | DN10A-BF | DN10-BF | DNC10-BF | DNUT12 | TD3121-BF |
| 5/16 | 10-( ) | DNPT10AA-BF | DNPT10A-BF | DNPT12 | DNCPT12 | DNUT12 | PT10-BF |
| 11/32 | 11-( ) | DN12AA-BF | DNPT12A-BF | DNPT12 | DNCPT12 | DNUT12 | PT12-BF |
| 3/8 | 12-( ) | DN12AA-BF | DNPT12A-BF | DNPT12 | DNCPT12 | DNUT12 | PT12-BF |

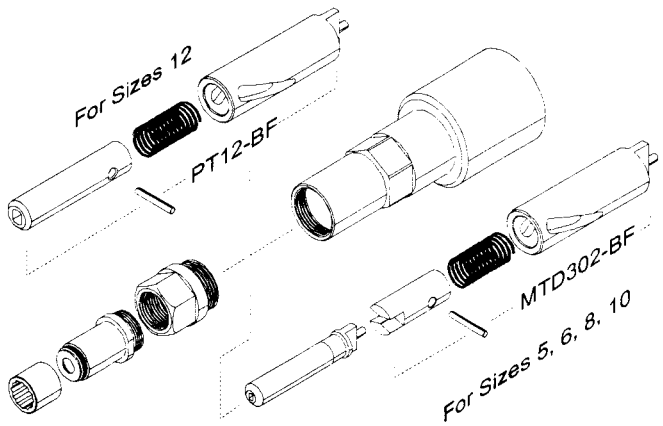


| Technical Data | |
|---|---|
| Operating Preasure | 90 PSI |
| Torque Output | 32.5 lbs |
| Stall Torque | 32.5 lbs |
| Motor Speed | 540 rpm |
| Air Consumption (at free speed) | 28 cfm |
| Horse Power Rating | 0.7 |
| Weight | 3.5 lbs |

# Composi-Lok II
## Blind Fastener Tools

## Pneumatic Right Angle for Composi-Lok II®

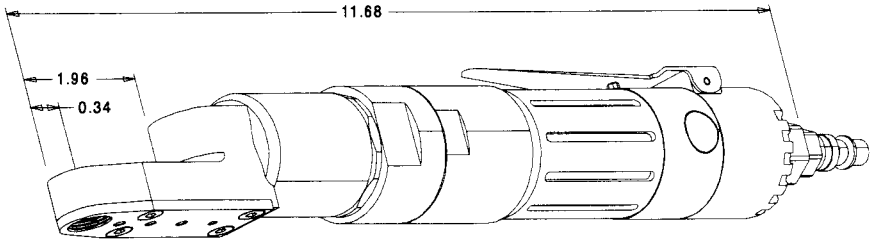


| Complete Nose | "A" | "B" |
|---|---|---|
| DN5 - 6 - BF | 2.22 | 0.56 |
| DN8 - BF | 2.22 | 0.56 |
| DN10 - BF | 2.42 | 0.75 |

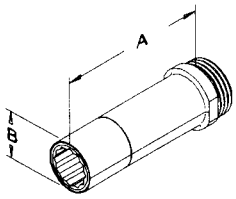


**How To Order:**
1. Select the diameter and match with the Table below
2. From the corresponding row select the complete assembly part number or the parts needed.

Example: **DNR8AA-BF**
Part Number Includes
- 7440 Pneumatic Wrench Driver
- DNC8-BF Nose Tip Connector
- DNUT8 Universal Nose Tip
- PW4602-BF Wrench Adapter

| Dia. | Fastener Assembly | Complete Assembly | Adapter Assembly | Nose Adapter | Nose Tip Connector | Universal Nose Tip | Wrench Adapter |
|---|---|---|---|---|---|---|---|
| 5/32 | 5-( ) | DNR5AA-BF | DNR5A-BF | DN5-6-BF | DNC5-6-BF | DNUT5-6 | PW4651-BF |
| 3/16 | 6-( ) | DNR6AA-BF | DNR6A-BF | DN5-6-BF | DNC5-6-BF | DNUT5-6 | PW4001-BF |
| 7/32 | 7-( ) | DNR7AA-BF | DNR7A-BF | DN8-BF | DNC8-BF | DNUT8 | PW4201-BF |
| 1/4 | 8-( ) | DNR8AA-BF | DNR8A-BF | DN8-BF | DNC8-BF | DNUT8 | PW4602-BF |
| 9/32 | 9-( ) | DNR10AA-BF | DNR10A-BF | DN10-BF | DNC10-BF | DNUT12 | PW4121-BF |
| 5/16 | 10-( ) | DNR10AA-BF | DNR10A-BF | DN10-BF | DNC10-BF | DNUT12 | PW4121-BF |

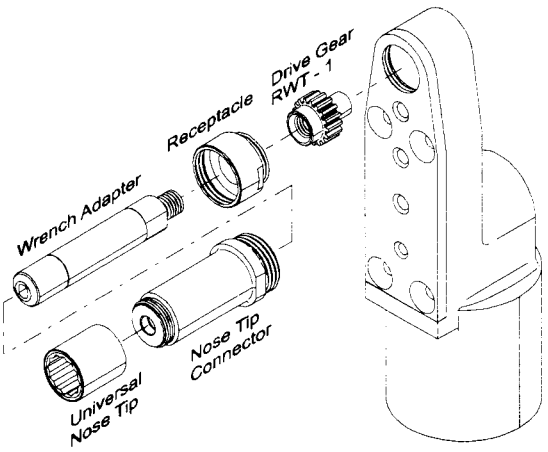


| Technical Data | |
|---|---|
| Operating Preasure | 90 PSI |
| Torque Output | 108 in lbs |
| Stall Torque | 10 ft lbs |
| Motor Speed | 500 rpm |
| Air Consumption (at free speed) | 18 cfm |
| Horse Power Rating | 0.33 |
| Weight | 3.5 lbs |

# Composi-Lok II

## Blind Fastener Tools

## Pneumatic Right Angle Torque Responsive Adapter Assemblies for Composi-Lok II®

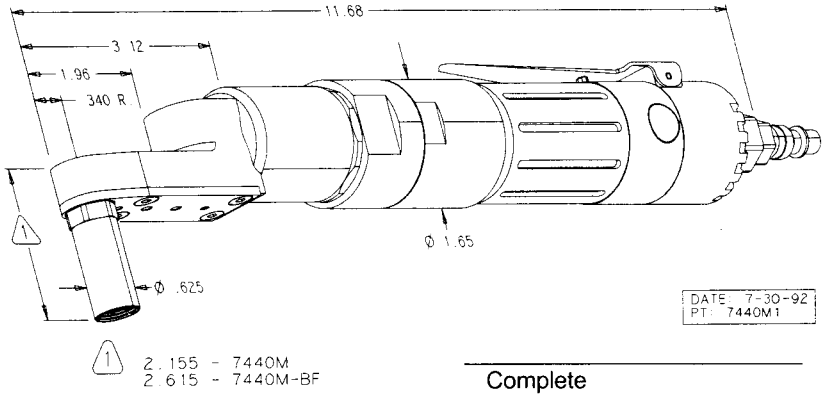


| Complete Nose | "A" | "B" |
|---|---|---|
| DNRT5 - 6 - BF | 2.22 | 0.56 |
| DNRT8 - BF | 2.22 | 0.56 |
| DNRT10 - BF | 2.42 | 0.75 |

**How To Order:**

1. Select the diameter and match with the Table below
2. From the corresponding row select the complete assembly part number or the parts needed.

Example: **DNRT7AA-BF**
Part Number Includes
- 7440M-BF Pneumatic Wrench Driver
- DNCRT8-BF Nose Tip Connector
- DNUT5-6 Universal Nose Tip
- TD5201-BF Wrench Adapter

| Dia. | Fastener Size | Complete Assembly | Adapter Assembly | Nose Adapter | Nose Tip Connector | Universal Nose Tip | Wrench Adapter |
|---|---|---|---|---|---|---|---|
| 5/32 | 5-( ) | DNRT5AA-BF | DNRT5A-BF | DNRT5-6-BF | DNCRT5-6-BF | DNUT5-6 | TD5651-BF |
| 3/16 | 6-( ) | DNRT6AA-BF | DNRT6A-BF | DNRT5-6-BF | DNCRT5-6-BF | DNUT5-6 | TD5001-BF |
| 7/32 | 7-( ) | DNRT7AA-BF | DNRT7A-BF | DNRT8-BF | DNCRT8-BF | DNUT8 | TD5201-BF |
| 1/4 | 8-( ) | DNRT8AA-BF | DNRT8A-BF | DNRT8-BF | DNCRT8-BF | DNUT8 | TD5601-BF |
| 9/32 | 9-( ) | DNRT10AA-BF | DNRT10A-BF | DNRT10-BF | DNCRT10-BF | DNUT12 | TD5121-BF |
| 5/16 | 10-( ) | DNRT10AA-BF | DNRT10A-BF | DNRT10-BF | DNCRT10-BF | DNUT12 | TD5121-BF |

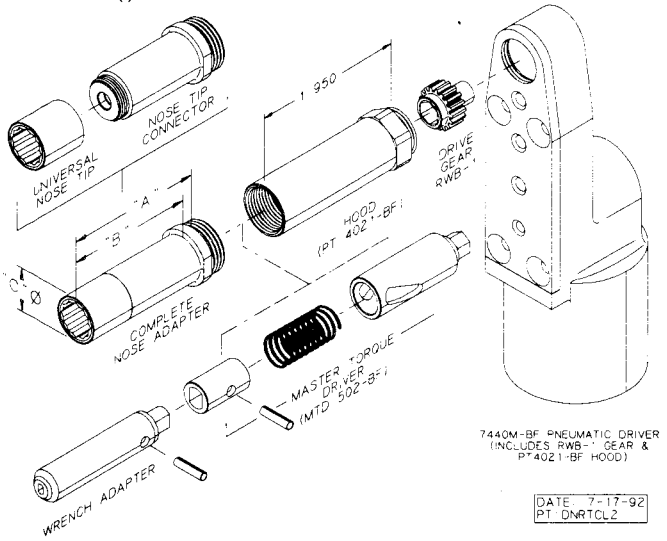


| Technical Data | |
|---|---|
| Operating Preasure | 90 PSI |
| Torque Output | 108 in lbs |
| Stall Torque | 10 ft lbs |
| Motor Speed | 500 rpm |
| Air Consumption (at free speed) | 18 cfm |
| Horse Power Rating | 0.33 |
| Weight | 3.5 lbs |

# Composi-Lok II

## Blind Fastener Tools

### Pneumatic Right Angle Torque Responsive with Integrated Wrench/Torque Driver for Composi-Lok II®

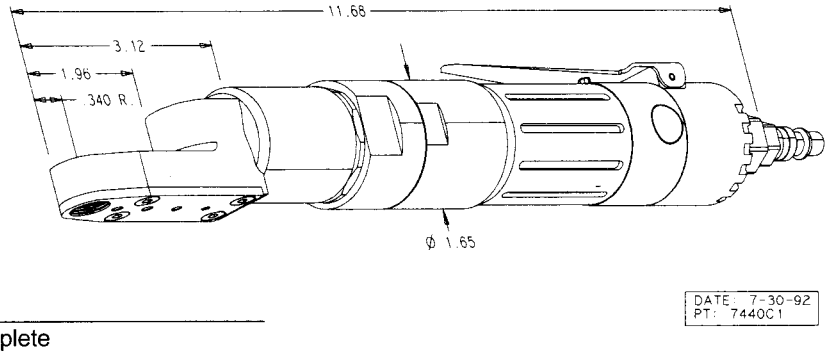


| Complete Nose | "A" | "B" |
|---|---|---|
| DNRPT5 - 6 - BF | 1.33 | 0.56 |
| DNRPT8-BF | 1.33 | 0.56 |
| DNRPT10-BF | 1.53 | 0.75 |

**How To Order:**

1. Select the diameter and match with the Table below
2. From the corresponding row select the complete assembly part number or the parts needed.

Example: **DNRPT10AA-BF**

Part Number Includes

- 7440M-BF Pneumatic Wrench Driver
- DNCRPT10-BF Nose Tip Connector
- DNUT12 Universal Nose Tip
- UPTRW-10-BF Complete Wrench/Driver
- UWT-10 Wrench Tip

| Dia. | Fastener Size | Complete Assembly | Adapter Assembly | Nose Adapter | Nose Tip Connector | Universal Nose Tip | Wrench Adapter | Wrench Tip |
|---|---|---|---|---|---|---|---|---|
| 5/32 | 5-( ) | DNRPT5AA-BF | DNRPT5A-BF | DNRPT5-6-BF | DNCRPT5-6-BF | DNUT5-6 | UPTRW-5-BF | UWT-5-BF |
| 3/16 | 6-( ) | DNRPT6AA-BF | DNRPT6A-BF | DNRPT5-6-BF | DNCRPT5-6-BF | DNUT5-6 | UPTRW-6-BF | UWT-6-BF |
| 7/32 | 7-( ) | DNRPT7AA-BF | DNRPT7A-BF | DNRPT8-BF | DNCRPT8-BF | DNUT8 | UPTRW--7-BF | UWT-7-BF |
| 1/4 | 8-( ) | DNRPT8AA-BF | DNRPT8A-BF | DNRPT8-BF | DNCRPT8-BF | DNUT8 | UPTRW-8-BF | UWT-8-BF |
| 5/16 | 10-( ) | DNRPT10AA-BF | DNRPT10A-BF | DNRPT10-BF | DNCRPT10-BF | DNUT12 | UPTRW-10-BF | UWT-10-BF |

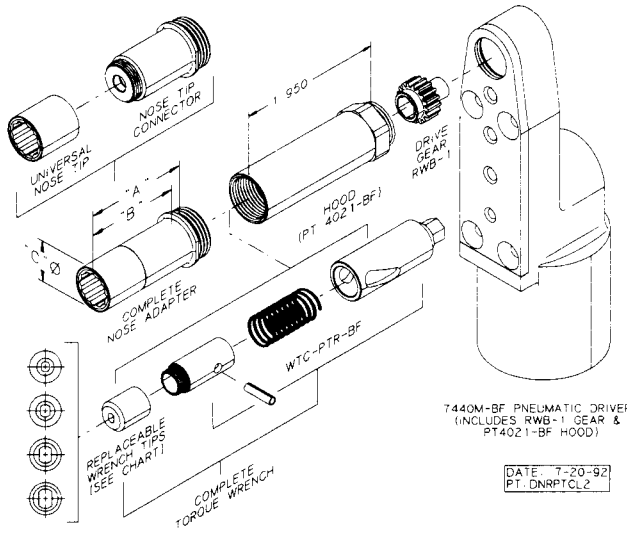


| Technical Data | |
|---|---|
| Operating Preasure | 90 PSI |
| Torque Output | 108 in lbs |
| Stall Torque | 10 ft lbs |
| Motor Speed | 500 rpm |
| Air Consumption (at free speed) | 18 cfm |
| Horse Power Rating | 0.33 |
| Weight | 3.5 lbs |

# Composi-Lok II

## Blind Fastener Tools

## Pneumatic Right Angle Close Quarter Driver Assemblies for Composi-Lok II®

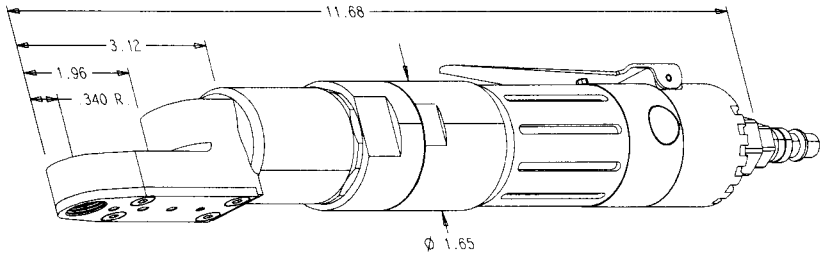


| Complete Nose | "A" | "B" |
|---|---|---|
| DNRC5 - 6 - BF | 0.53 | 0.56 |
| DNRC8-BF | 0.53 | 0.56 |
| DNRC10-BF | 0.73 | 0.75 |

**How To Order:**

1. Select the diameter and match with the Table below
2. From the corresponding row select the complete assembly part number or the parts needed.

Example: **DNRC5AA-BF**

Part Number Includes

- 7440C Pneumatic Wrench Driver
- DNCR5-6 Nose Tip Connector
- DNUT5-6 Universal Nose Tip
- RW5-1-BF Wrench Gear

| Dia. | Fastener Size | Complete Assembly | Adapter Assembly | Nose Adapter | Nose Tip Connector | Universal Nose Tip | Wrench Adapter |
|---|---|---|---|---|---|---|---|
| 5/32 | 5-( ) | DNRC5AA-BF | DNRC5A-BF | DNRC5-6 | DNCRC5-6 | DNUT5-6 | RW5-1-BF |
| 3/16 | 6-( ) | DNRC6AA-BF | DNRC6A-BF | DNRC5-6 | DNCRC5-6 | DNUT5-6 | RW6-1-BF |
| 7/32 | 7-( ) | DNRC7AA-BF | DNRC7A-BF | DNRC8 | DNCRC-8 | DNUT8 | RW7-1-BF |
| 1/4 | 8-( ) | DNRC8AA-BF | DNRC8A | DNRC8 | DNCRC-8 | DNUT8 | RW8-1 |
| 9/32 | 9-( ) | DNRC10AA | DNRC10A | DNRC10 | DNCRC-10 | DNUT12 | RW10-1 |
| 5/16 | 10-( ) | DNRC10AA | DNRC10A | DNRC10 | DNCRC-10 | DNUT12 | RW10-1 |

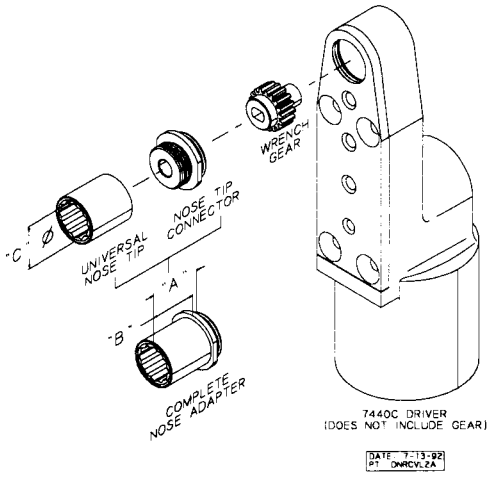


| Technical Data | |
|---|---|
| Operating Preasure | 90 PSI |
| Torque Output | 108 in lbs |
| Stall Torque | 10 ft lbs |
| Motor Speed | 500 rpm |
| Air Consumption (at free speed) | 18 cfm |
| Horse Power Rating | 0.33 |
| Weight | 3.5 lbs |

# Composi-Lok II
## Blind Fastener Tools

### Standard Ratchet Hand Tool
### Adapter Assembly for Composi-Lok II®

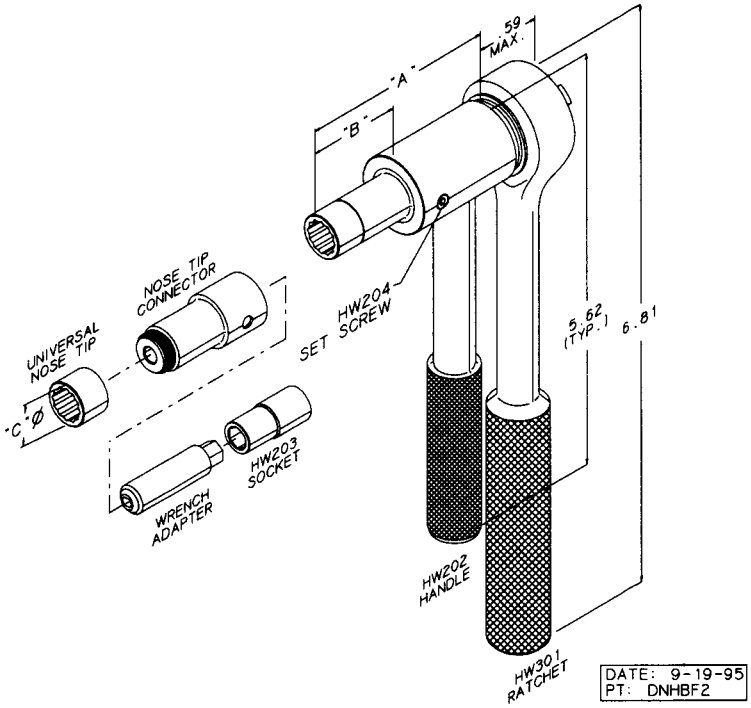


| Nose | "A" | "B" |
|---|---|---|
| 5/32 | 2.94 | 0.56 |
| 3/16 | 2.94 | 0.56 |
| 7/32 | 3.07 | 0.56 |
| 1/4 | 3.07 | 0.56 |
| 5/16 | 3.14 | 0.75 |
| 3/8 | 3.16 | 0.75 |

**How To Order:**
1. Select the diameter and match with the Table on this page.
2. From the corresponding row select the complete assembly part number or the parts needed.

Example: **DNH5AA-BF**
Part Number Includes
- HW301 Ratchet Wrench
- HW202 Holder
- DNCH5-6-BF Nose Tip Connector
- DNUT5-6 Universal Nose Tip
- HW1651-BF Wrench Gear

| Dia. | Fastener Size | Complete Assembly | Adapter Assembly | Nose Adapter | Nose Tip Connector | Universal Nose Tip | Wrench Adapter |
|---|---|---|---|---|---|---|---|
| 5/32 | 5-( ) | DNH5AA-BF | DNH5A-BF | DNH5-6-BF | DNCH5-6-BF | DNUT5-6 | HW1651-BF |
| 3/16 | 6-( ) | DNH6AA-BF | DNH6A-BF | DNH5-6-BF | DNCH5-6-BF | DNUT5-6 | HW2001-BF |
| 7/32 | 7-( ) | DNH7AA-BF | DNH7A-BF | DNH8-BF | DNCH8-BF | DNUT8 | HW2201-BF |
| 1/4 | 8-( ) | DNH8AA-BF | DNH8A-BF | DNH8-BF | DNCH8-BF | DNUT8 | HW2601-BF |
| 9/32 | 9-( ) | DNH10AA-BF | DNH10A-BF | DNH12-BF | DNCH12-BF | DNUT12 | HW3121-BF |
| 5/16 | 10-( ) | DNH10AA-BF | DNH10A-BF | DNH12-BF | DNCH12-BF | DNUT12 | HW3121-BF |
| 11/32 | 11-( ) | DNH12AA-BF | DNH12A-BF | DNH12-BF | DNCH12-BF | DNUT12 | HW3751-BF |
| 3/8 | 12-( ) | DNH12AA-BF | DNH12A-BF | DNH12-BF | DNCH12-BF | DNUT12 | HW3751-BF |

# Composi-Lok II
## Blind Fastener Tools

## Close Quarter Ratchet Hand Tool
## Adapter Assemblies for Composi-Lok II®

| Nose | "A" | "B" |
|---|---|---|
| DNHC5-6 | 0.65 | 0.56 |
| DNHC8 | 0.80 | 0.56 |
| DNHC12 | 0.80 | 0.75 |

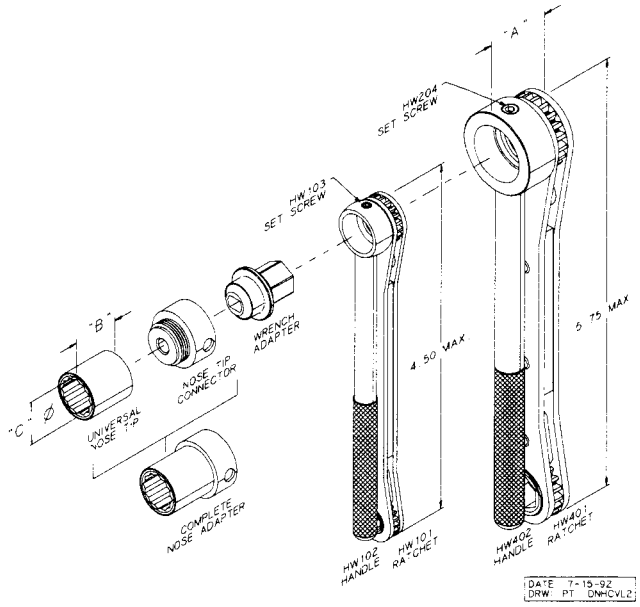


**How To Order:**
1. Select the diameter and match with the Table on this page.
2. From the corresponding row select the complete assembly part number or the parts needed.

Example: **DNHC5AA-BF**
Part Number Includes
- HW101 Ratchet Wrench
- HW102 Holder
- DNHC5-6 Nose Tip Connector
- DNUT5-6 Universal Nose Tip
- HW5-BF Wrench Gear

| Dia. | Fastener Size | Complete Assembly | Ratchet Driver | Adapter Assembly | Nose Adapter | Nose Tip Connector | Universal Nose Tip | Wrench Adapter |
|---|---|---|---|---|---|---|---|---|
| 5/32 | 5-( ) | DNHC5AA-BF | HW100 | DNHC5A-BF | DNHC5-6 | DNCHC5-6 | DNUT5-6 | HW5-BF |
| 3/16 | 6-( ) | DNHC6AA-BF | HW100 | DNHC6A-BF | DNHC5-6 | DNCHC5-6 | DNUT5-6 | HW6-BF |
| 7/32 | 7-( ) | DNHC7AA-BF | HW400 | DNHC7A-BF | DNHC8 | DNCHC8 | DNUT8 | HW7-BF |
| 1/4 | 8-( ) | DNHC8AA | HW400 | DNHC8A | DNHC8 | DNCHC8 | DNUT8 | HW8 |
| 9/32 | 9-( ) | DNHC10AA | HW400 | DNHC10A | DNHC12 | DNCHC12 | DNUT12 | HW10 |
| 5/16 | 10-( ) | DNHC10AA | HW400 | DNHC10A | DNHC12 | DNCHC12 | DNUT12 | HW10 |
| 11/32 | 11-( ) | DNHC12AA | HW400 | DNHC12A | DNHC12 | DNCHC12 | DNUT12 | HW12 |
| 3/8 | 12-( ) | DNHC12AA | HW400 | DNHC12A | DNHC12 | DNCHC12 | DNUT12 | HW12 |

# Composi-Lok II
## Blind Fastener Tools

## Grip Scales for Composi-Lok® and Composi-Lok II® Fasteners

### Grip Scale Part #: LFCLG-1 & LFCLG-2

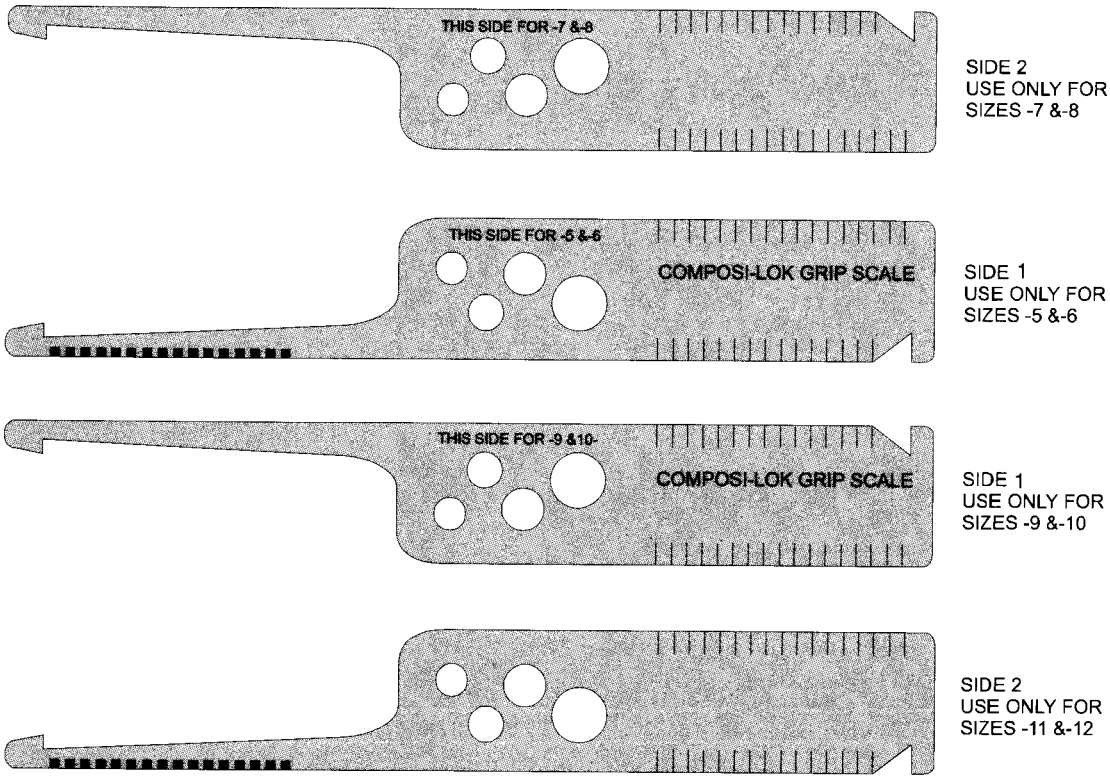


**Selection of Grip Length**

In measuring hole depth take reading where the skin surface meets the number or line on gauge. If directly on a line use either the indicated grip or the next longer grip.

In cases where there a tappered sheet condition exits, determine grip length at the hole centerline. The taper must not exceed 7° to ensure the proper performance of the fastener.

# Composi-Lok III
## Blind Fastener Tools

## *Pneumatic Pistol Driver Assembly for Composi-Lok 3*

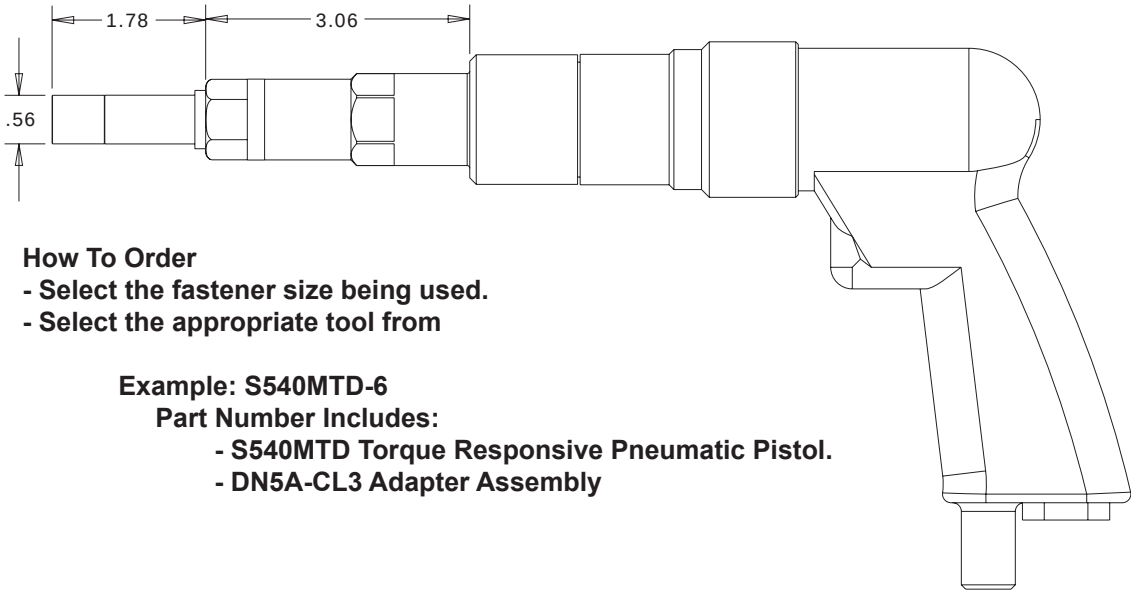


**How To Order**
**- Select the fastener size being used.**
**- Select the appropriate tool from**

**Example: S540MTD-6**
**Part Number Includes:**
**- S540MTD Torque Responsive Pneumatic Pistol.**
**- DN5A-CL3 Adapter Assembly**

| Dia. | Composi-Lok 3 Series | Complete Assembly | Pneumatic Pistol | Adapter Assembly | Complete Nose Adapter | Nose Tip Connector | Universal Nose Tip | Wrench Adapter |
|---|---|---|---|---|---|---|---|---|
| 5/32" | MBF2300 | DN5AA-CL3 | S540MTD | DN5A-CL3 | DN5-8-CL3 | DNC5-6 | DNUT5-8-CL3 | TD1651-CL3 |
| 3/16" | | DN6AA-CL3 | | DN6A-CL3 | DN5-8-CL3 | DNC5-6 | DNUT5-8-CL3 | TD2001-CL3 |
| 1/4" | | DN8AA-CL3 | | DN8A-CL3 | DN5-8-CL3 | DNC8 | DNUT5-8-CL3 | TD2601-CL3 |

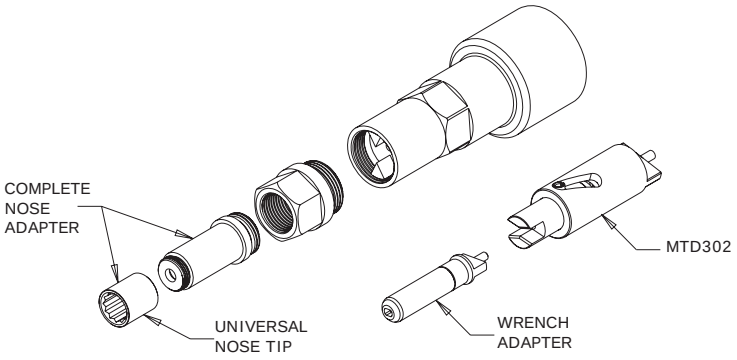


| Technical Data | |
|---|---|
| Operating Pressure | 90 PSI |
| Torque Output | 220 in-lbs |
| Motor Speed | 500 rpm |
| Air Consumption (at free speed) | 30 cfm |
| Horse Power Rating | 0.5 |
| Weight | 3.5lb |

# Composi-Lok III
## Blind Fastener Tools

## *Pneumatic Right Angle Assembly for Composi-Lok 3*

**How To Order**
**- Select the fastener size being used.**
**- Select the appropriate tool from Table below**

**Example: DNR5AA-CL3**
**Part Number Includes**
**- 7440 Pneumatic Right Angle Motor.**
**- DNR5A-CL3 Driver Assembly.**

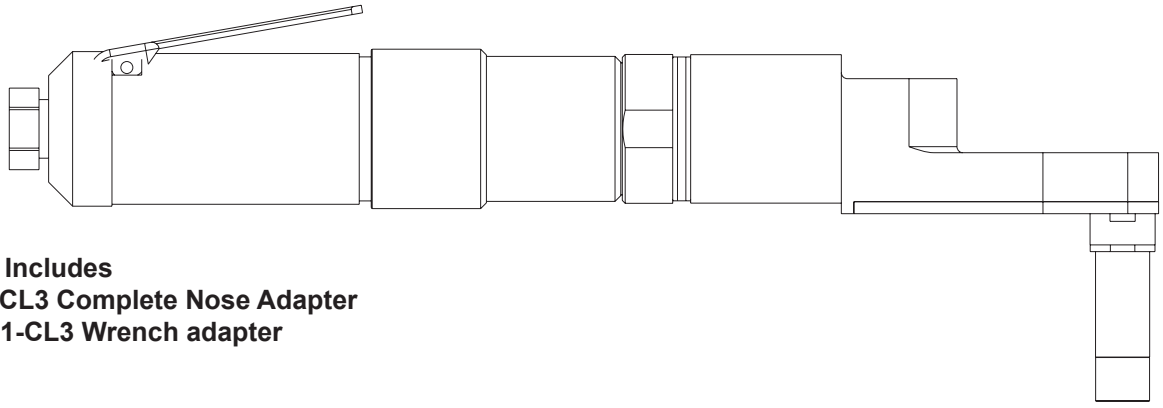

**DNR5A-CL3**
**Part Number Includes**
**- DN5-8-CL3 Complete Nose Adapter**
**- PW4651-CL3 Wrench adapter**

| Dia. | Composi-Lok 3 Series | Complete Assembly | Pneumatic Pistol | Adapter Assembly | Complete Nose Adapter | Nose Tip Connector | Universal Nose Tip | Wrench Adapter |
|---|---|---|---|---|---|---|---|---|
| 5/32" | MBF2300 | DNR5AA-CL3 | 7440. | DNR5A-CL3 | DN5-8-CL3 | DNC5-6 | DNUT5-8-CL3 | PW4651-CL3 |
| 3/16" | | DNR6AA-CL3 | | DNR6A-CL3 | DN5-8-CL3 | DNC5-6 | DNUT5-8-CL3 | PW4001-CL3 |
| 1/4" | | DNR8AA-CL3 | | DNR8A-CL3 | DN5-8-CL3 | DNC8 | DNUT5-8-CL3 | PW4601-CL3 |

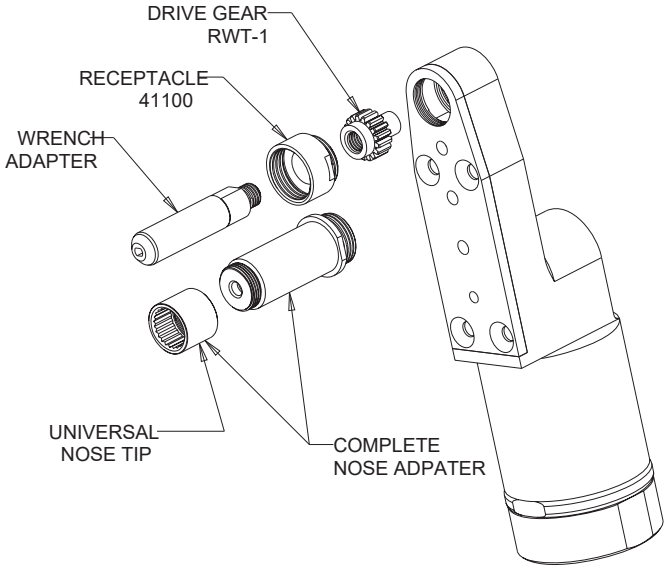


| Technical Data | |
|---|---|
| Operating Pressure | 90 PSI |
| Torque Output | 220 in-lbs |
| Motor Speed | 500 rpm |
| Air Consumption (at free speed) | 30 cfm |
| Horse Power Rating | 0.5 |
| Weight | 3.5lb |

# Composi-Lok III
## Blind Fastener Tools

### *Standard Ratchet Hand Tool*
### *Adapter Assembly for Composi-Lok 3*

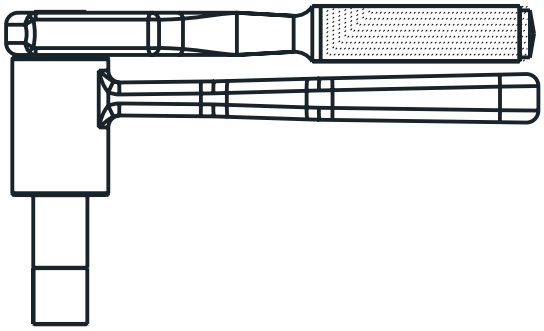

| Dia | Composi-Lok 3 Series | Complete Assembly | Adapter Assembly | Complete Nose Adapter | Nose Tip Connector | Universal Nose Tip | Wrench Adapter |
|---|---|---|---|---|---|---|---|
| 5/32" | MBF2300 | DNH5AA-CL3 | DNH5A-CL3 | DNH5-8-CL3 | DNC5-6 | DNUT5-8-CL3 | HW1651-CL3 |
| 3/16" | | DNH6AA-CL3 | DNH6A-CL3 | DNH5-8-CL3 | DNC5-6 | DNUT5-8-CL3 | HW2001-CL3 |
| 1/4" | | DNH8AA-CL3 | DNH8A-CL3 | DNH5-8-CL3 | DNC8 | DNUT5-8-CL3 | HW2601-CL3 |

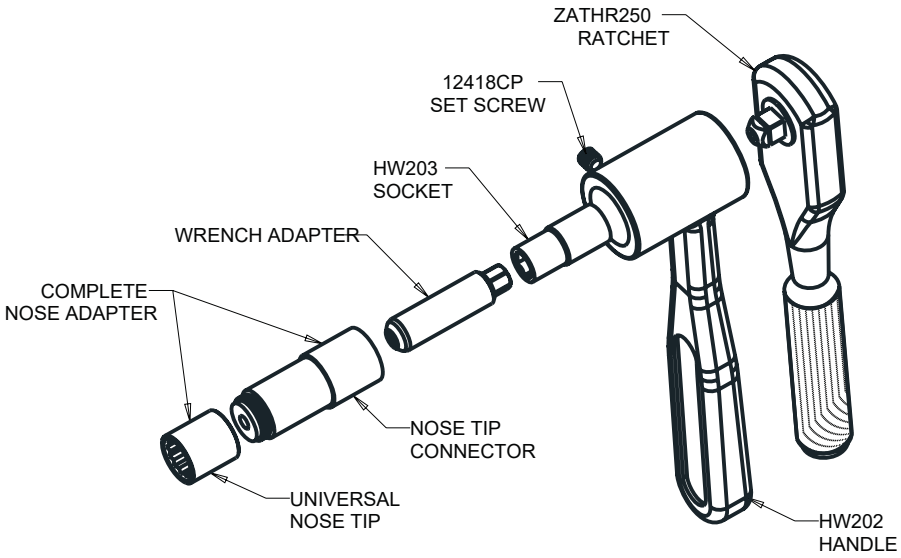

# Jo-Bolt Kits

## Blind Fastener Tools

### 4000 Kit
### Visu-Lok Ratchet Hand Tool

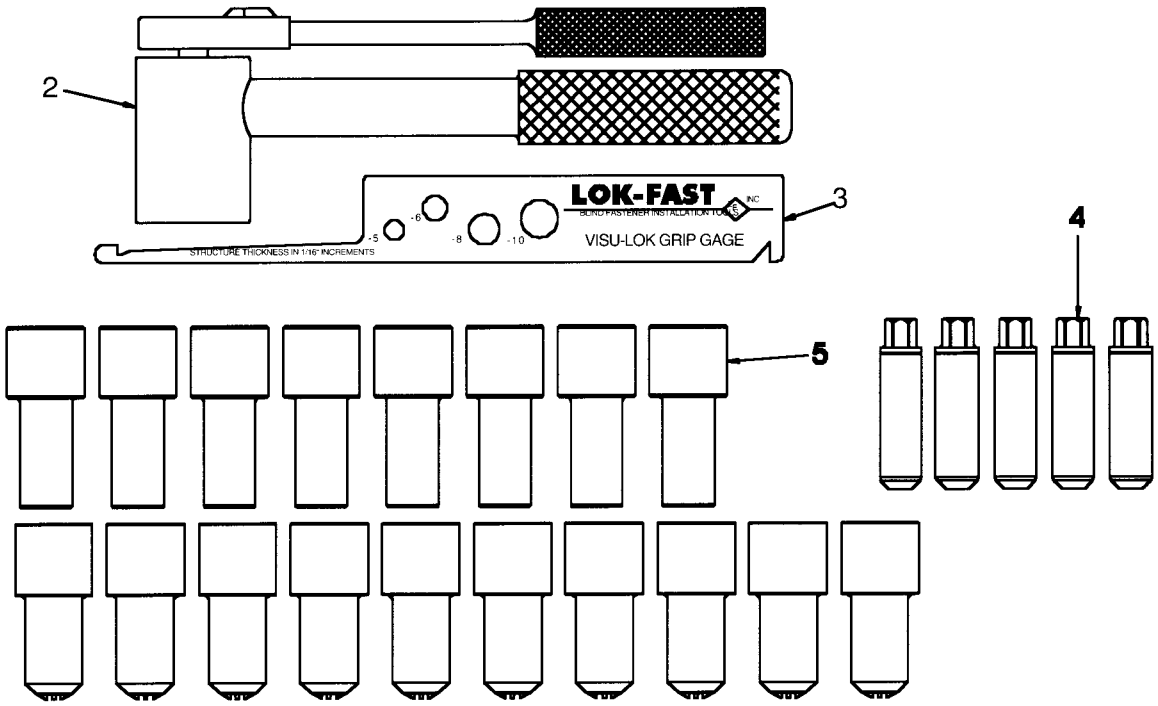


| Item | Part # | Description |
|---|---|---|
| 1 | 4020-4 | Tool Box |
| 2 | HW300 | Ratchet Hand Tool |
| 3 | LFVLG-1 | Visu-Lok Grip Gauge |
| 4 | HW1651 | Fastener Driver -5 |
| | HW2001 | Fastener Driver -6 |
| | HW2601 | Fastener Driver -8 |
| | HW3121 | Fastener Driver -10 |
| | HW3751 | Fastener Driver -12 |
| 5 | HW1652 | Flush Nose -5 |
| | HW1652P | Protruding Nose -5 |
| | HW1652A | Millable Nose -5 |
| | HW1652T | Reduced Flush Nose -5 |
| | HW2002 | Flush Nose -6 |

| Item | Part # | Description |
|---|---|---|
| 5 | HW2002P | Protruding Nose -6 |
| | HW2002A | Millable Nose -6 |
| | HW2002T | Reduced Flush Nose -6 |
| | HW2602 | Flush Nose -8 |
| | HW2602P | Protruding Nose -8 |
| | HW2602A | Millable Nose -8 |
| | HW2602T | Reduced Flush Nose -8 |
| | HW3122 | Flush Nose -10 |
| | HW3122P | Protruding Nose -10 |
| | HW3122T | Reduced Flush Nose -10 |
| | HW3752 | Flush Nose -12 |
| | HW3752P | Protruding Nose -12 |
| | HW3752T | Reduced Flush Nose -12 |

# Jo-Bolt Kits

## Blind Fastener Tools

### VLHK-101
### Visu-Lok = Ratchet Hand Tool Kit
### Flush and Protruding

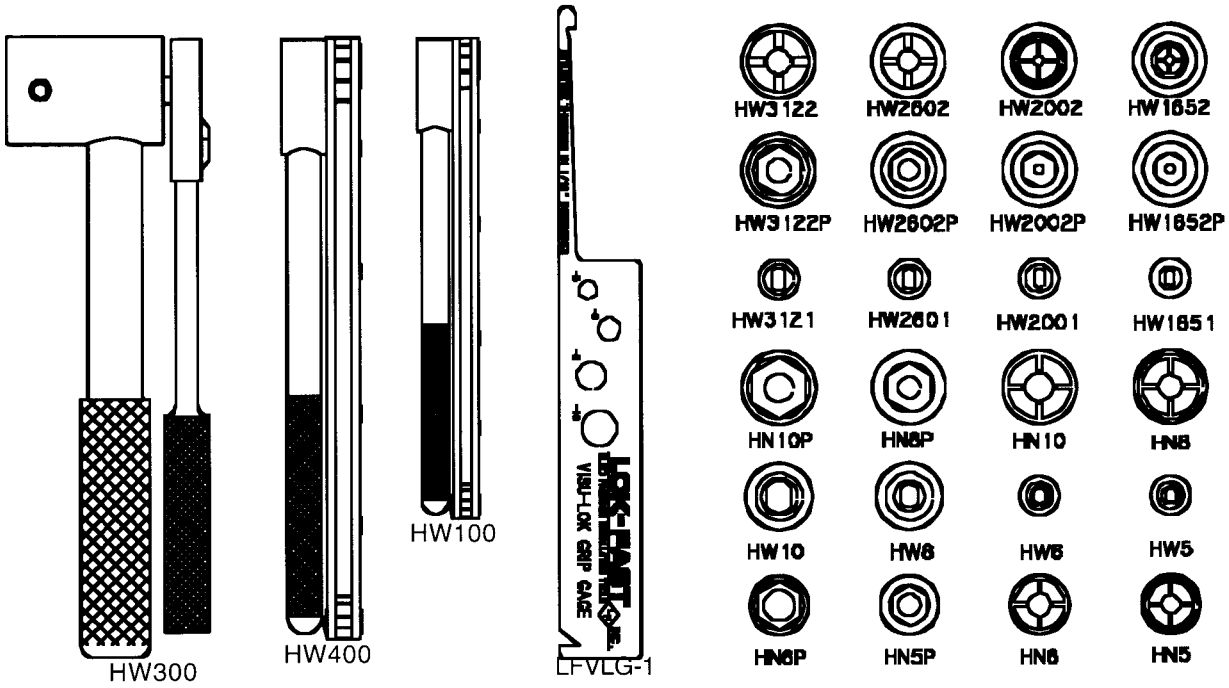


---

### VLHK-102
### Visu-Lok = Ratchet Hand Tool Kit
### Flush and Protruding

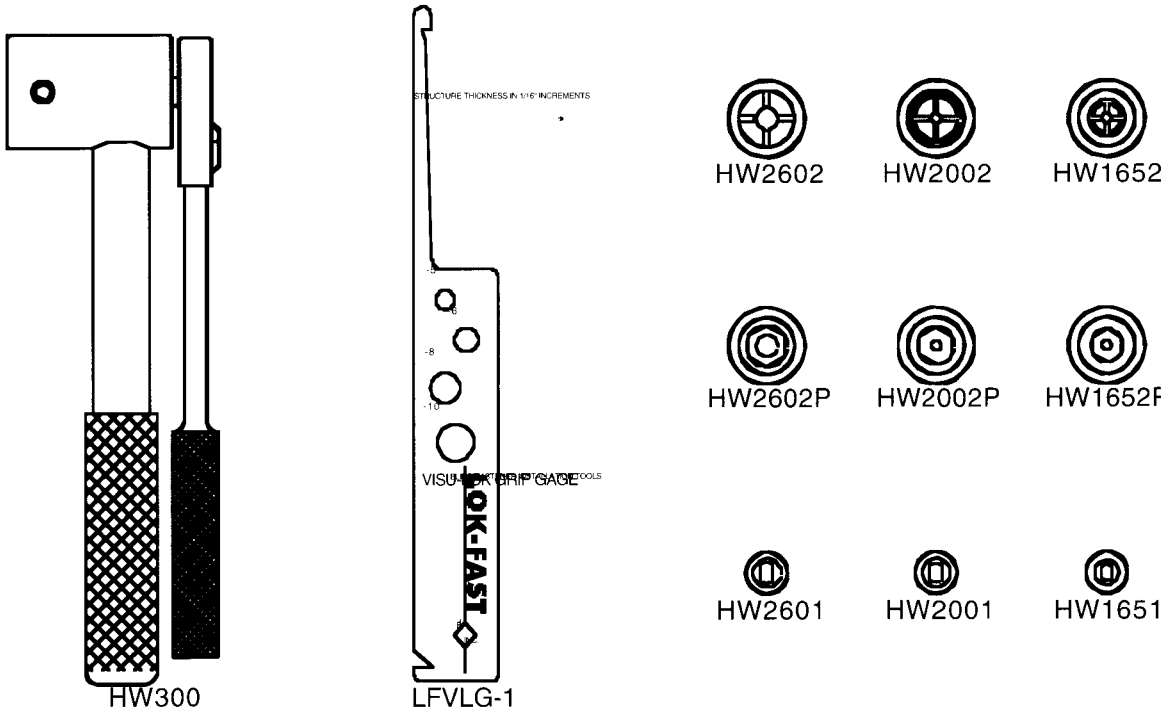

# Jo-Bolt Kits

## Blind Fastener Tools

**4090 Kit**
**Visu-Lok Pistol**
**Master Torque Driver**

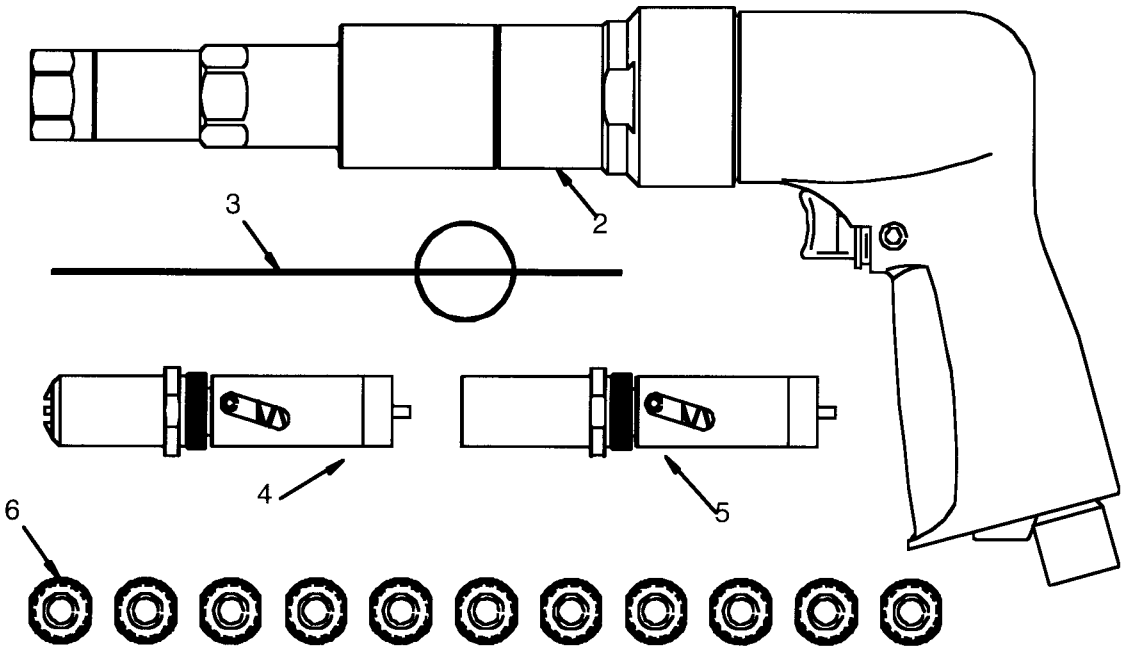


| Item | Part # | Description |
|---|---|---|
| 1 | 4020-4 | Tool Box |
| 2 | S540MTD | Pneumatic Motor |
| 3 | LFVLG-1 | Grip Gauge |
| 4 | PT375 | PT Flush Nose |
| 5 | PT375P | PT Protruding Nose |
| 6 | TD165 | Flush Nose |
| | TD165P | Protruding Nose |
| | TD165A | Millable Nose |
| | TD200 | Flush Nose |
| | TD200P | Protruding Nose |
| | TD200A | Millable Nose |
| | TD260 | Flush Nose |
| | TD260P | Protruding Nose |
| | TD260A | Millable Nose |
| | TD312 | Flush Nose |
| | TD312P | Millable Nose |

# Jo-Bolt Kits

## Blind Fastener Tools

### 4070 Kit
### Visu-Lok Right Angle
### Torque Respsonsive Kit

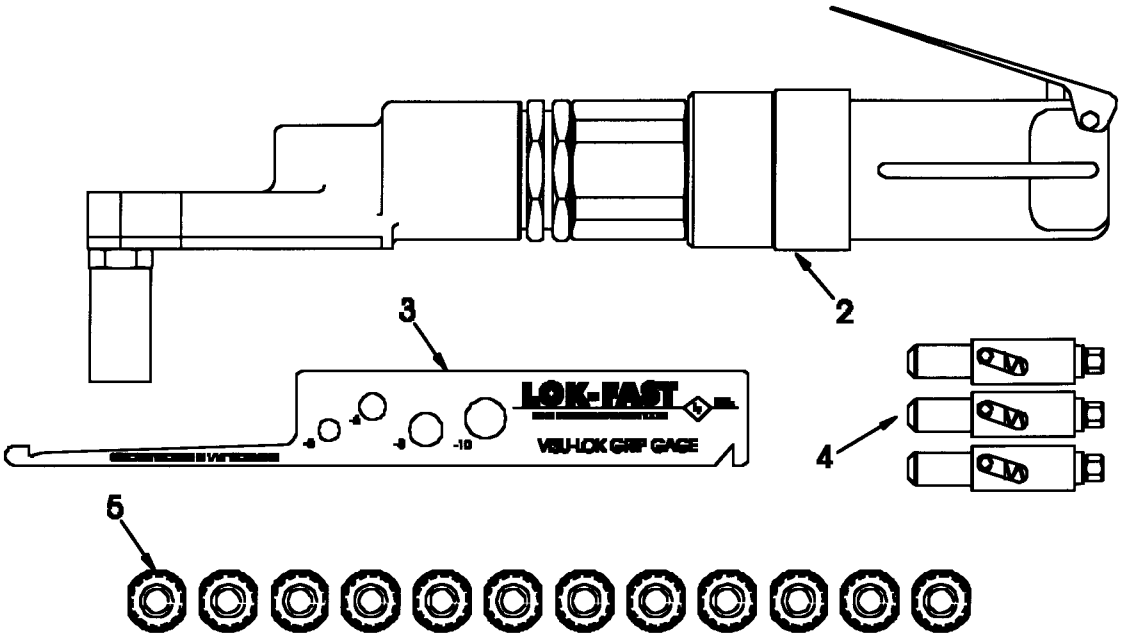


| Item | Part # | Description |
|---|---|---|
| 1 | 4020-4 | Tool Box |
| 2 | 7440M | Complete Driver Assy.l |
| 3 | LFVLG-1 | Visu-Lok Grip Gauge |
| 4 | PT4651 | Fastener Driver -5 |
| | PT4001 | Fastener Driver -6 |
| | PT4601 | Fastener Driver -8 |
| 5 | PT4652 | Flush Nose -5 |
| | PT4652P | Protruding Nose -5 |
| | PT4652A | Millable Nose -5 |

| Item | Part # | Description |
|---|---|---|
| 5 | PT4652T | Reduced Flush -5 |
| | PT4002 | Flush Nose -6 |
| | PT4002P | Protruding Nose -6 |
| | PT4002A | Millable Nose -6 |
| | PT4002T | Reduced Flush Nose -6 |
| | PT4602 | Flush Nose -8 |
| | PT4602P | Protruding Nose -8 |
| | PT4602A | Millable Nose -8 |
| | PT4602T | Reduced Flush -8 |

# Jo-Bolt Kits

## Blind Fastener Tools

### CLHK-101
### Composi-Lok
### Ratchet Hand Tool Kit

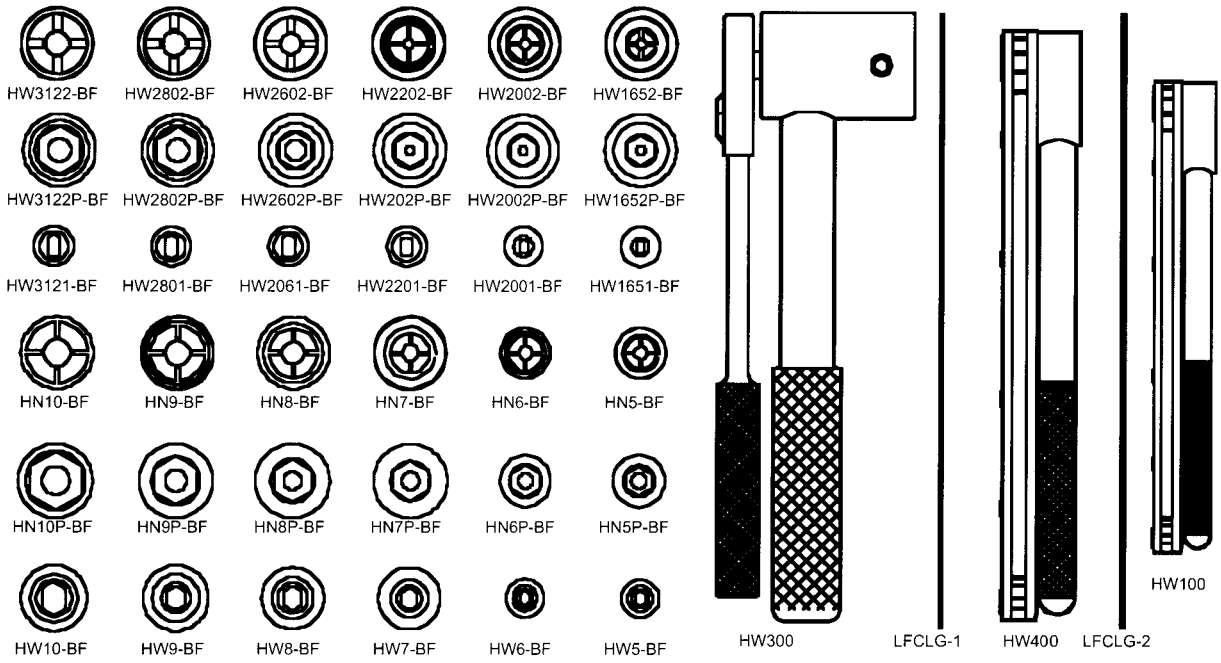


### CLIIHK-101
### Composi-LokII
### Ratchet Hand Tool Kit

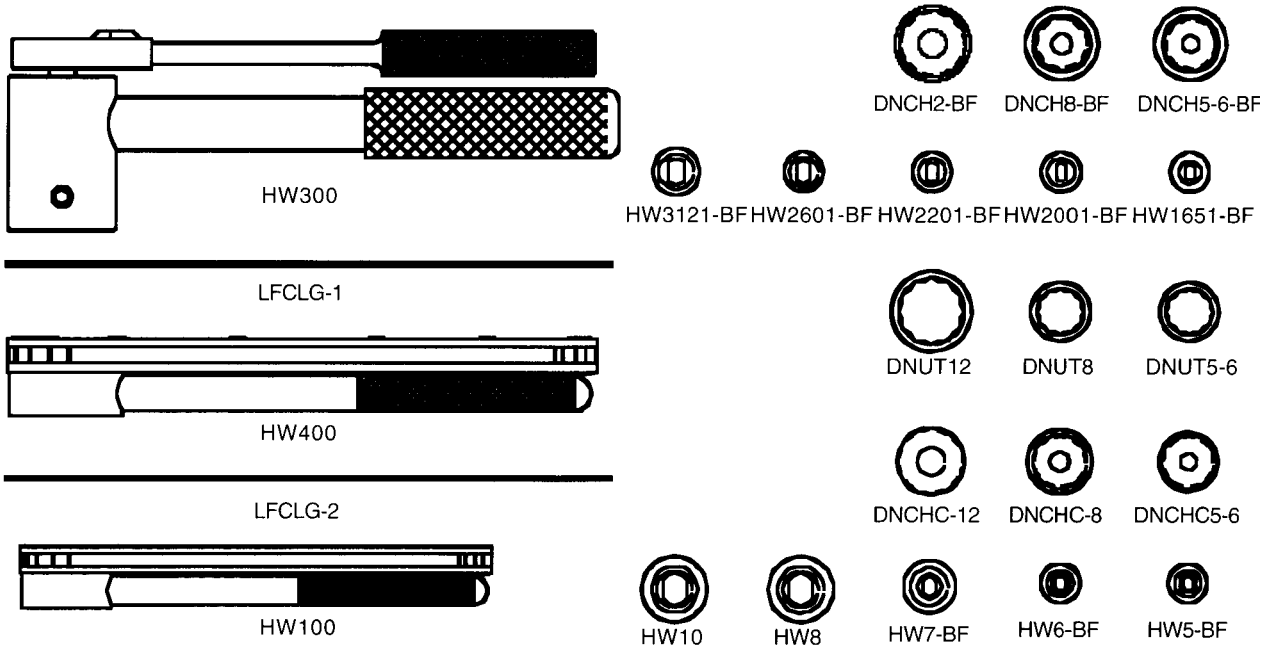

# Jo-Bolt Kits

## Blind Fastener Tools

**4080 Kit**
**Composi-Lok Pistol**
**Master Torque Driver**

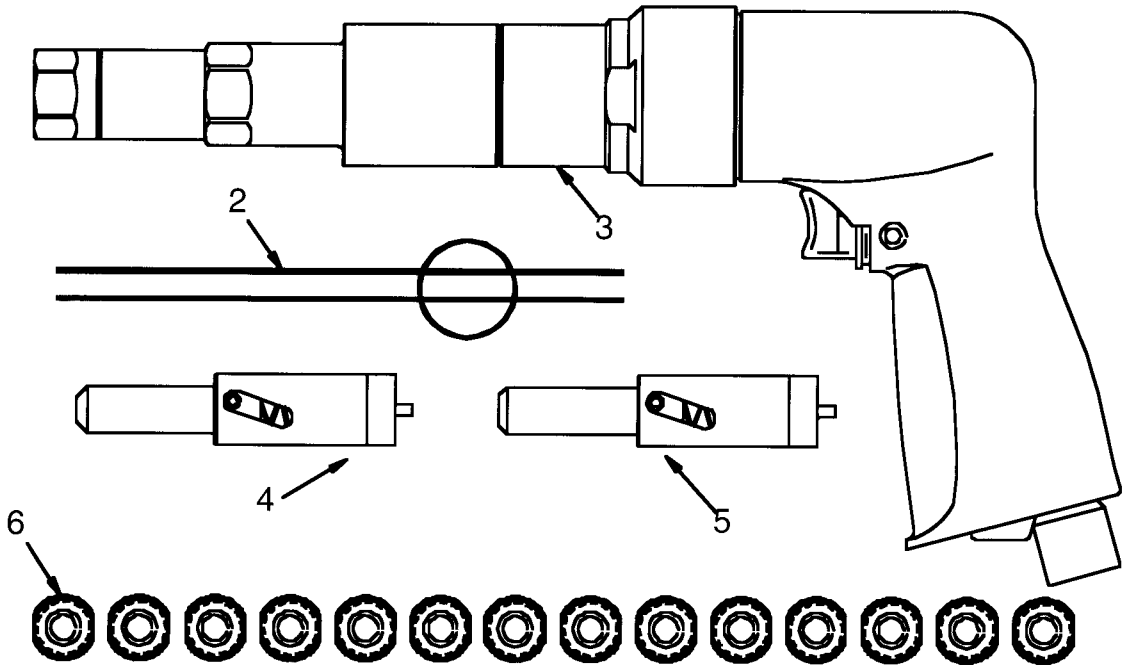


| Item | Part # | Description |
|---|---|---|
| 1 | 4020-4 | Tool Box |
| 2 | S540MTD-BF | Ratchet Hand Tool |
| 3 | LFCLG-1 | Composi-Lok Grip Gauge |
| | LFCLG-2 | Composi-Lok Grip Gauge |
| 4 | PT10-BF | Fastener Driver -10 |
| 5 | PT12-BF | Fastener Driver -12 |
| 6 | TD1651-BF | Fastener Driver -5 |
| | TD2001-BF | Fastener Driver -6 |
| | TD2601-BF | Fastener Driver -8 |
| | PW3652T-BF | Reduced Flush Nose - 5 |
| | PW3652P-BF | Protruding Nose -5 |
| | PW3652-BF | Flsuh Nose -5 |

| Item | Part # | Description |
|---|---|---|
| 6 | PW3002T-BF | Reduced Flush Nose -6 |
| | PW3002P-BF | Protruding Nose -6 |
| | PW3002-BF | Flush Nose -6 |
| | PW3602T-BF | Reduced Flush Nose -8 |
| | PW3602P-BF | Protruding Nose -8 |
| | PW3602-BF | Flush Nose -8 |
| | PT10FT-BF | Reduced Flush Nose -10 |
| | PT10P-BF | Protruding Nose -10 |
| | PT10F-BF | Flush Nose -10 |
| | PT12FT-BF | Reduced Flush Nose -12 |
| | PT12P-BF | Protruding Nose -12 |
| | PT12F-BF | Flush Nose -12 |

# Jo-Bolt Kits

## Blind Fastener Tools

### 4060 Kit
### Composi-Lok Right Angle
### Master Torque Driver Assembly

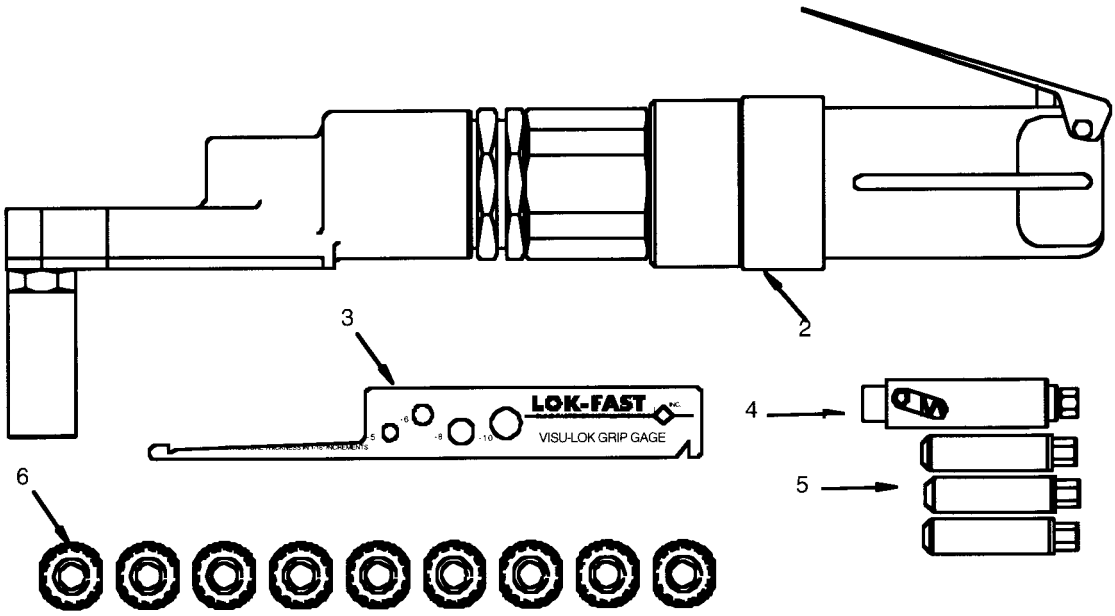


| Item | Part # | Description |
|---|---|---|
| 1 | 4020-4 | Tool Box |
| 2 | 7440M-BF | Complete Driver Assy.l |
| 3 | LFCLG-1 | Composi-Lok Grip Gauge |
| 4 | MTD502-BF | Master Torque Driver |
| 5 | TD5651-BF | Fastener Driver -5 |
| | TD5001-BF | Fastener Driver -6 |
| | TD5601-BF | Fastener Driver -8 |
| 6 | TD5652T-BF | Reduced Flush Nose -5 |

| Item | Part # | Description |
|---|---|---|
| 6 | TD5652P-BF | Protruding Nose 5 |
| | TD5652-BF | Flush -5 |
| | TD5002T-BF | Reduced Flush Nose -6 |
| | TD5002P-BF | Protruding Nose -6 |
| | TD5002-BF | Flush Nose -6 |
| | TD5602T-BF | Reduced Flush Nose -8 |
| | TD5602P-BF | Protruding Nose -8 |
| | TD5602-BF | Flush Nose -8 |

# Trennschleifer für Nietstifte
RIVET STEM SHAVER

**Corebolt break-off shaving & milling tools designed for use with Visu-Lok, Composi-Lok & Radial-Lok fasteners which must meet flushness requirements.**

1

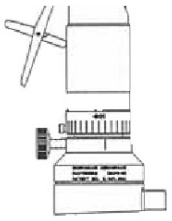

2

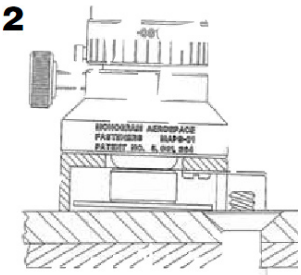

- 30,000 rpm promotes swift corebolt "slicing"·
- Lightweight
- One handed operation
- Cutting depth increments of .001"
- Precision set up with use of new depth adjustment gage

---

**Trennschleifer für überstehende Nietschifte nach Abriss. Speziell für Visu-Lok, Composi-Lok & Radial-Lok Nieten.**

- 30,000 UpM für schnelles und sicheres Arbeiten
- leichtes Design
- mit einer Hand bedienbar
- tiefenverstellbar in Stufen von .001" (0,025mm)
- einfache Einstellung durch Präzisions-Einstellring

3

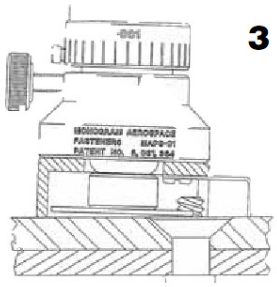

4

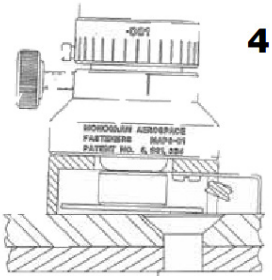



**MAPS-01**

**MAPSD-01**
**Trennscheibe**
GRINDING DISC



# Nietstiftfräser
## PINTAIL MILLING UNIT



### Features

- Ideal for milling corebolts on recessed fasteners
- Operates with any drill motor
- .001 " cutting increments
- Locating nibs on nose piece help prevent drifting while cutting
- Compact design fits in the palm of your hand

### Eigenschaften

- Ideal um tiefsitzende Nietstifte abzufräsen
- funktioniert mit jeder Bohrmaschine
- Schneidtiefe in .001 " Schritten einstellbar
- kleine Ausbuchtungen an der Spitze helfen bei der Zentrierung
- handliches Design

| **Nietdurchmesser**<br>FASTENER DIAMETER | **Komplettes Werkzeug**<br>COMPLETE TOOL | **Bohrer**<br>MILLER CUTTER |
|---|---|---|
|  |  |  |
| **-5 (5/32)** | MAPM-01-05AA | MAPM-05-05 |
| **-6 (3/16)** | MAPM-01-06AA | MAPM-05-06 |
| **-7 (7/32)** | MAPM-01-07AA | MAPM-05-07 |
| **-8 (1/4)** | MAPM-01-08AA | MAPM-05-08 |
| **-9 (9/32)** | MAPM-01-09AA | MAPM-05-09 |
| **-10 (5/16)** | MAPM-01-10AA | MAPM-05-10 |
| **-11 (11/32)** | MAPM-01-11AA | MAPM-05-11 |
| **-12 (3/8)** | MAPM-01-12AA | MAPM-05-12 |

# Optisches Tiefen-Micrometer
# OPITCAL DEPTH MICROMETER

## BASIC MODELS 966 & 966A



**RETICLE EYEPIECE CELL**
This eyepiece is available for use with Optical Micrometer Model 966A (200 power). It allows the Micrometer to become an optical comparator, capable of making accurate width measurements up to .040 inch with increments of .001 inch.

**EASY TO OPERATE**
The easy-to-read vernier scale in US Customary Measurement Units has a resolution of .0001 inch.

**LED LIGHT AND LIGHT ADAPTER**
Reading can be made easier and clearer by the use of the optional battery-powered light and adapter.
This two-piece unit consists of an adjustable bracket that fits all bases and a light unit that highlights the spot to be viewed.

**TRIPOD BASE**
The tripod base is standard equipment for both Optical Micrometer models. It is used for all primary flat and simple curved surfaces and affords the greatest utility.

**INTERCHANGEABLE OPTICS**
There are interchangeable optics available for both models. This means that Model 966 (100 power) can be converted to Model 966A (200 power) through the use of the interchangeable optics … and visa versa.

**Model 966** contains a 100 power Optical Micrometer with a standard tripod base is an instrument case. It is recommended when greater working depth is required. It measures depths up to .6650 inch and a height above the surface of .1000 inch. Measure transparent materials up to .9975 inch. It's field of view is .090 dia. and it is accurate to +/- .0005 inch.

**Model 966A** contains a 200 power Optical Micrometer with a standard tripod base in an instrument case. It measures depths up to .2600 inch and a height above the surface of .1000 inch. Measure transparent materials up to .3900 inch. It's field of view is .060 dia. It is accurate to +/- .0002 inch.

**OPTIONAL MICROMETER BASES**
Each separate base is designed for specific Positioning or application on particular types of surface.



**P/N 972**
**OFFSET TRIPOD**
BASE For flat or curved surfaces adjacent to protrusions.



**P/N 974**
**TRANSLUCENT V-BLOCK BASE**
For round surfaces or outside angles. Also for flat surfaces adjacent to recessed areas.



**P/N 971**
**LARGE TRIPOD BASE**
For small parts, up to 2 inches in height.



**P/N 971**
**QUADPOD BASE**
For convex and/or concave irregular cured surfaces.



**P/N 973**
**WEDGE BIPOD BASE**
For areas located inside angles of at least 80°.

## Micrometer Kit Model 966A1




**Model 966A1** contains an Optical Micrometer and all accessories, including interchangeable optics (100/200 power), six interchangeable bases, reticle eyepiece, micrometer light, batteries and adapter in an instrument case.

1. Optical Micrometer Model 966A (200 Power)
2. 20X Eyepiece Cell (P/N 989)
3. 15X Reticle Eyepiece Cell (P/N 966AR)
4. 10X Objective Optic Cell (P/N 966AC)
5. 5X Objective Optic Cell (P/N 966C)
6. LED Micrometer Light (P/N 961)
7. Micrometer Light Adapter (P/N 962)
8. Standard Tripod Base (P/N 970)
9. Quadpod Base (P/N 971)
10. Offset Tripod Base (P/N 972)
11. Wedge Bipod Base (P/N 973)
12. Translucent V-Block Base (P/N 974)
13. Large Tripod Base (P/N 975)
14. Allen Wrench (P/N 984)
15. Instrument Kit Case (P/N 977)

# HALOSENSOR®

## Drill Position Targeting System for Aircraft Manufacture & MRO



- Locate hole position from outside the aircraft skin
- Used in the manufacture of all Airbus aircraft
- An alternative to back drilling
- High accuracy levels
- Reduces concessions and waste
- Simple to use; robust in harsh production environments
- All new custom display system

**Hand held system**
- 1 sensor head, drill block and vacuum -system
- 1 targeting computer and mount
- 1 power supply box
- 1 charger
- All cables and mounts required for use

(shop air connector not supplied due to variety)

| Part Number | Power (Full Charge) | Range | Accuracy | Color |
|---|---|---|---|---|
| HEHS00003 | Up to 40 hours use | Up to 55 mm (2”) | Up to 0.1 mm (0.004”) | Yellow (1) |
| HEHS00003CTE | Up to 24 hours use | Up to 55 mm (2”) | Up to 0.1 mm (0.004”) | Blue (2) |
| HEHS8500001 | Up to 24 hours use | Up to 100 mm (4”) | Up to 0.1 mm (0.004”) | Red (3) |

(1) The yellow HALOSENSOR V3 system the standard product designed for drill position targeting on large structures.

(2) The blue HALOSENSOR CTE system is designed to work as per standard systems but can target drill positions within 15 mm of the structure edge. Normally used in conjunction with the standard yellow or red systems.

(3) The red HALOSENSOR V4 system is a long range version of the standard yellow through skin sensor. This system allows sensing over 100 mm through aluminium, carbon composite, titanium, stainless steel and any non ferrous materials.

---

### HALOSENSOR® NANO System



The rugged HALOSENSOR range includes the NANO devices that, being smaller, can cope with tighter radius curved surfaces or situations of limited access.
The standard range can accurately locate blind holes from 2 mm to 100 mm. A custom design and manufacture service is available for even more specialised applications.

- small footprint through skin sensor system
- designed for easy single handed operation
- can be used in tight curves and close to the edge of panels

| Part Number | Power (Full Charge) | Range | Accuracy | Color |
|---|---|---|---|---|
| HEHSTSSNANO001 | Up to 24 hours use | Up to 100 mm (4") | Up to 0.1 mm (0.004”) | Orange |



# Senklehren
# COUNTERSINK GAGES

## Countersink Depth Gages

**Part Number: SR901-XXX-XX**




**Features:**

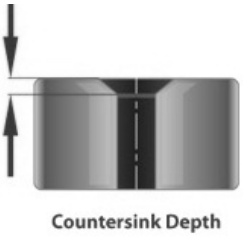


- Measuring accuracy .0001 inch (.0025mm)
- Direct contact inside the countersink walls
- Direct reading, no calculations or charts necessary
- Large base configurations available for curved surfaces
- Accurate, repeatable and reproducible
- SPC ready via data port cable
- Ease of use with minimal training
- Eliminate costly rework
- Gage and set block calibrated to NIST traceable standards
- Unique serial numbers on gages, set blocks and indicators
- The components of our gages are made of heat treated wear resistant tool steels and micro finished to ensure accurate and trouble free operation

1. "A" Countersink included angle: _____
2. "B" Hole diameter through: _____
3. "C" Countersink major diameter: _____
4. "D" Depth of the countersink: _____
5. "R" Transition radius: _____
6. Fastener part number and/or specification: _____
7. Surface curvature: _____
8. Size, thickness and position of any drilling jig or fixture to measure through: _____

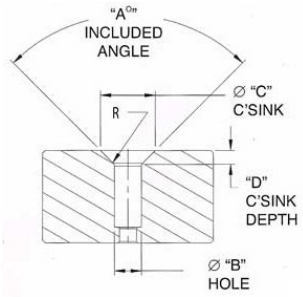


SRX01 - XXX - XX

| BODY STYLE: | GAGE NUMBER: | HOLE SIZE: | BASE STYLE: |
|---|---|---|---|
| 8 = STRAIGHT<br>9 = FLANGED | ASSIGNED IN SEQUENCE BY TRIO | CAN BE THE SAME AS THE FASTENER SIZE, THE EXACT DECIMAL SIZE OR ANY NUMBER | T = TRIPOD<br>B = BIPOD<br>Q = QUADPOD<br>S = SPECIAL |

**Digital Indicator Features:**

- LCD display with rotating bezel
- Inch/ mm mode toggle capable
- SPC data output ready via data port
- Upper and lower tolerance capable
- User selectable resolution

## Countersink Diameter Gages

**Part Number: SR900-XXX-XX**




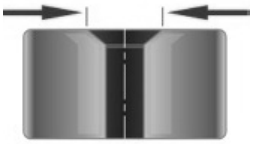


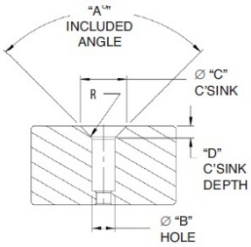


**Features:**

- Measuring accuracy .00025 inch (.006mm)
- Direct contact on the major countersink diameter
- Direct reading, no calculations or charts necessary
- Large base configurations available for curved surfaces
- Accurate, repeatable and reproducible
- SPC ready via data port cable
- Ease of use with minimal training
- Eliminate costly rework
- Gage and set block calibrated to NIST traceable standards
- Unique serial numbers on gages, set blocks and indicators
- The components of our gages are made of heat treated wear resistant tool steels and micro finished to ensure accurate and trouble free operation

1. "A" Countersink included angle: _____
2. "B" Hole diameter through: _____
3. "C" Countersink major diameter: _____
4. "D" Depth of the countersink: _____
5. "R" Transition radius: _____
6. Fastener part number and/or specification: _____
7. Surface curvature: _____
8. Size, thickness and position of any drilling jig or fixture to measure through: _____

SRX00 - XXX - XX

| BODY STYLE: | COUNTERSINK "A" INCULDED ANGLE: | DIAMETER "C" RANGE: | BASE STYLE: |
|---|---|---|---|
| 8 = STRAIGHT<br>9 = FLANGED | 60°<br>82°<br>90°<br>100°<br>120°<br>130°<br>135°<br>140°<br>150° | 0 = .020-.170 in/ 0.50- 4.32 mm<br>1 = .160-.360 in/ 4.06- 9.15 mm<br>2 = .360-.560 in/ 9.14-14.25 mm<br>3 = .560-.780 in/ 14.22-19.82 mm<br>4 = .780-1.00 in/ 19.81-25.40 mm<br>5 = 1.00-1.25 in/ 25.40-31.75 mm<br>6 = 1.25-1.56 in/ 31.75-39.63 mm | T = TRIPOD<br>B = BIPOD<br>Q = QUADPOD<br>S = SPECIAL |

Many other Models are available on request.

# Senklehren
# COUNTERSINK GAGES

## Perpendicularity Gages






Perpendicularity

**Part Number: PG900-2-1**

**WITH CLOSE FITTED QUICK CONNECTING PROBES**

**Features:**

- Measuring Range 0.0 to 5.5 Degrees Easy To Use, Fast, Accurate and Repeatable
- Works on Flat and Curved Surfaces
- Works Through Drilling Templates
- Direct Reading Digital Display
- Ideal for SPC
- Quick Connecting/Disconnecting Hole Probes
- Interchangeable Gage Bases

| | |
|---|---|
| Angle: | 0.0 to 5.5” |
| Diameter: | .0500” to 1.5000” Interchangeable probes. |
| Accuracy: | 0.1 decimal degree (6 min.) |
| Resolution: | 0.1 decimal degree (6 min.) |
| Repeatability: | 0.1 decimal degree (6 min.) |
| Weight: | 2.2 lbs/ 1.0 kg |

**The basic instrument includes: Mahr-Federal XLS indicator, the gage body, one quick connect/disconnect hole probe and a gage calibration block.**

**Basic gage with .2500” hole diameter probe and 5.0° angle block**

## Flushness Gages




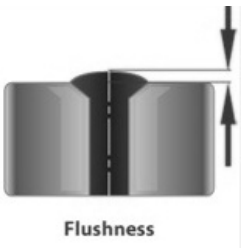

Flushness

**Part Number: FR900**

**Features:**

- Measuring accuracy .0001 inch (.0025mm)
- Direct contact with the stylus allows pin point selection of the protrusion measurement
- Direct reading, no calculations or charts necessary
- Accurate, repeatable and reproducible
- SPC ready via data port cable
- Ease of use with minimal training
- Eliminate costly rework
- Gage and set block calibrated to NIST traceable standards
- Unique serial numbers on gages, set blocks and indicators
- The components of our gages are made of heat treated wear resistant tool steels and micro finished to ensure accurate and trouble free operation

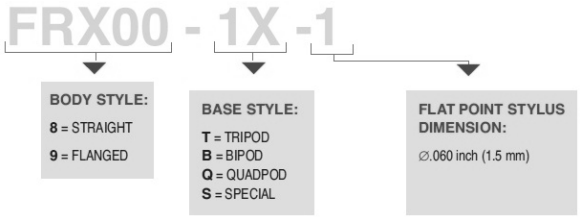


1. “F” Fastener head diameter: _____
2. “C” Countersink major diameter: _____
3. Fastener part number and/or specification: _____
4. Surface curvature: _____

**Digital Indicator Features:**

- LCD display with rotating bezel
- Inch/ mm mode toggle capable
- SPC data output ready via data port
- Upper and lower tolerance capable
- User selectable resolution

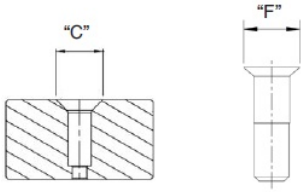


Many other Models are available on request.

# Installing and Removal Tools for Electrical Connector Contacts

Mil Spec Composition B & C

## Installing/Removal Tool - Plastic body metal composition

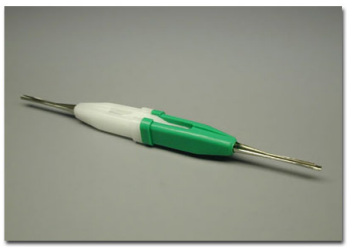

| Part-Number | Color-Code | Size | Connector Series |
|---|---|---|---|
| | | | |
| M81969/1-01 | Green/White | 22 | MIL-C-24308 |
| M81969/1-02 | Red/White | 20 | MIL-C-81659 |
| M81969/1-03 | Blue/White | 16 | |
| M81969/1-04 | Green/White | 22D | |
| | | | |
| | | | |

## Installing/Removal Tool - Plastic composition

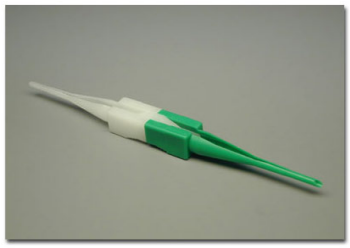

| Part-Number | Color-Code | Size | Connector Series |
|---|---|---|---|
| | | | MIL-C-26482 |
| M81969/14-01 | Green/White | 22D/M | MIL-C-81703 |
| M81969/14-02 | Red/White | 20 | MIL-C-83723 |
| M81969/14-03 | Blue/White | 16 | MIL-C-38999 |
| M81969/14-04 | Yellow/White | 12 | MIL-T-81714 |
| | | | |
| M81969/14-05 | Gray/White | 10 | MIL-C-38999 |

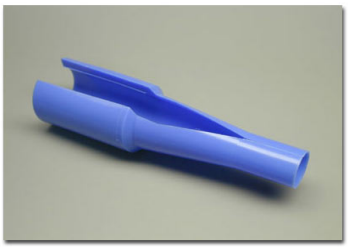

| Part-Number | Color-Code | Size | Connector Series |
|---|---|---|---|
| | | | MIL-C-26482 |
| M81969/14-06 | Red | 8 | MIL-C-81703 |
| M81969/14-07 | Blue | 4 | MIL-C-83723 |
| M81969/14-08 | Yellow | 0 | MIL-C-38999 * |
| | | | MIL-T-81714 |
| | | | MIL-C-5015 |
| | | | * Not for Size 8 ! |

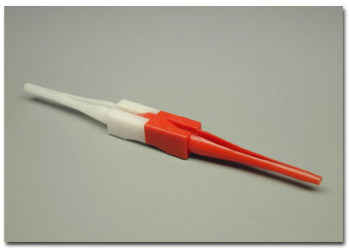

| Part-Number | Color-Code | Size | Connector Series |
|---|---|---|---|
| M81969/14-09 | Brown/White | 22 | MIL-C-55302/169/171 |
| | | | |
| M81969/14-10 | Red/Orange | 20 | MIL-C-38999 |
| | | | |
| M81969/14-11 | Red/White | 20 | MIL-C-26482 |
| | | | MIL-C-81703 |
| | | | MIL-C-83723 |
| | | | MIL-T-81714 |
| | | | MIL-C-5015 |



| Part-Number | Color-Code | Size | Connector Series |
|---|---|---|---|
| | | | |
| | | | |
| M81969/14-12 | Green | 8 | MIL-C-38999 |
| | | | |
| | | | |
| | | | |
| | | | |



| Part-Number | Color-Code | Size | Connector Series |
|---|---|---|---|
| | | | |
| M81969/16-01 | Red/White | 20 | MIL-C-81511 Series 3 & 4 |
| M81969/16-02 | Blue/White | 16 | |
| M81969/16-03 | Yellow/White | 12 | |
| | | | |
| | | | |
| | | | |

# Installing and Removal Tools for Electrical Connector Contacts

Mil Spec Composition B & C

## Installing/Removal Tool - Plastic composition

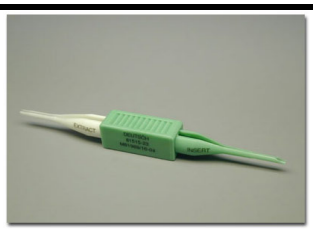

| Part-Number | Color-Code | Size | Connector Series |
|---|---|---|---|
| M81969/16-04 | Green/White | 23 | MIL-C-81511 Series 3 & 4 |



| Part-Number | Color-Code | Size | Connector Series |
|---|---|---|---|
| M81969/39-01 | Green/White | 20 | MIL-C-24308 |
| | | | MIL-C-81659 |
| MS27534-12 | Yellow/White | 12 | MIL-C-26482 |
| MS27534-16 | Blue/White | 16 | MIL-C-81703 |
| MS27534-20 | Red/White | 20 | MIL-C-83723 |
| MS27534-22D | Green/White | 22D/M | MIL-C-38999 |
| | | | MIL-T-81714 |
| | | | MIL-C-5015 |



| Part-Number | Color-Code | Size | Connector Series |
|---|---|---|---|
| | | | MIL-C-26482 |
| M81969/29-02 | Red | 8 | MIL-C-81703 |
| | | | MIL-C-83723 |
| | | | MIL-C-38999 |
| | | | MIL-T-81714 |
| | | | MIL-C-5015 |



| Part-Number | Color-Code | Size | Connector Series |
|---|---|---|---|
| | | | MIL-C-26482 |
| M15570-20-1 ** | Red/White | 20 | MIL-C-83723 |
| | | | MIL-C-38999 |
| | | | MIL-T-81714 |
| ** Has Insertion Depth Line for use with Deutsch Connectors ! | | | |
| | | | MIL-C-815111 and |
| M15570-22-1 | Yellow/White | 22 | Deutsch Sub Miniature |
| | | | Types RE, RSM,RTK, etc. |

## Removal Tool - Plastic composition



| Part-Number | Color-Code | Size | Connector Series |
|---|---|---|---|
| ACET20-11 | Green | 20 | MIL-C-24308 |
| ACET20-15 ** | Green | 20 | MIL-C-81659 |
| | | | As well as Cannon and |
| ** Removes Pin/Soc Contacts with overzised wire inculation ! | | | Matrix Equivalents |

## Removal Tool Probe Tip - Plastic composition



| Part-Number | Color-Code | Size | Connector Series |
|---|---|---|---|
| MS3448-001A | Red | 20 | MIL-C-26482 |
| MS3448-001B | Blue | 16 | MIL-C-81703 |
| MS3448-001C | Yellow | 12 | MIL-C-83723 |
| | | | MIL-C-83733 |
| | | | MIL-C-815111 Class L |
| | | | MIL-C-5015 |

# 37° Kelchwerkzeuge

## 37° FLARING TOOLS



437-FB

### 37° FLARING TOOL
**For 3/16", 1/4", 5/16", 3/8", 1/2" and 5/8" O.D. tubing.**

**437-FB** For use with soft copper, aluminum and brass tubing. Hardened steel chrome finished cone makes exceptionally smooth, high strength flares with a radius at base of flare – instead of the sharp angle formed by ordinary tools. New slip-on yoke permits use in tight quarters, allows flaring where there is little space between nut and tube end. New feed screw design provides smooth, easier operation. Positive gripping and self-gauging of tube for exact flare size. Sliding die blocks lock in place by clamp action. Satin chrome and black finish. Wt. 1.75 lbs.

**Forms Stronger Flares**
Stronger flares assured by smooth, even radius formed at base of every flare by engineered chamfer.

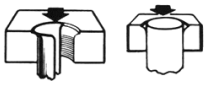

**Self-Gauging**
Just insert tube flush with top of die for accurate flare size.


Flares rolled out above die bar by smooth faceted cone. Makes stronger flares.

507-FB

### 37° ROL-AIR® FLARING TOOL
**For 3/16", 1/4", 5/16", 3/8", 1/2" and 5/8" O.D. tubing.**

**507-FB** For use with soft copper, aluminum and brass tubing. Faceted, hard chrome finished cone rolls out perfect 37° flares above die block-then automatically burnishes flare face. Original wall thickness is maintained at base of flare. New slip-on yoke permits use in tight quarters where there is little space between nut and tube end. Larger handle, with better leverage, and precision threads on feed screw make flaring effortless. Heat treated dies firmly grip tubing. Satin chrome and black nickel finish.
Wt. 1.75 lbs.

### METRIC SIZE 37° ROL-AIR® FLARING TOOL
**507-FBM** Metric 37° Rol-Air® flaring tool. Same as 507-FB except tor metric size tubing 6mm, 8mm, 10mm, 12mm, 14mm, 15mm O.D. tubing.

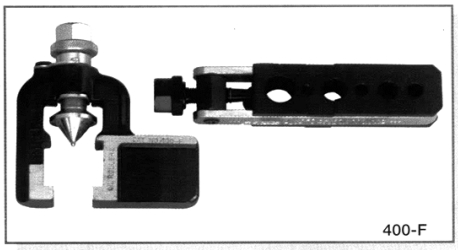
400-F

### 37° ROL AIR® FLARING TOOLS
**For 3/16", 1/4", 5/16", 3/8", 1/2" and 5/8" O.D. tubing.**

**400-F** Forms 37° flares to Government Specifications in steel, stainless steel (including MIL-T-6845), titanium and other metal tubing. Positive stop gauge assures correct size of flare. Special burnishing action polishes flare face. Three rollers in flaring cone roll out 37° flare above die block. Roller action cuts effort required; maintains original wall thickness-eliminates stress concentration. Extension on yoke for clamping in vise. Satin chrome and black nickel finish. Furnished in sturdy tool case. Wt. 2.5 lbs.

**401-FA** Reaming yoke for 1/4" to 5/8" O.D. tubing. Recommended for use with steel and stainless steel tubing for proper flaring. Wt. 0.7 lbs.

**402-FA** Flaring and reaming kit. Contains No. 400-F Flaring Tool and No.401-FA Reaming Yoke for 1/4" to 5/8" O.D. tubing. In tool case. Wt. 3.2 lbs.

Conforms to Federal Specification GGG-F-451a. Type 1, Class 1, Style A.

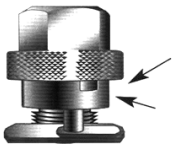
Feed release and burnishing mechanism

Flare control gauge


3 rollers in flaring cone.

Flare formed above die block


Feed screw controls depth of reaming

401-FA

# 37° Kelchwerkzeuge

## 37° FLARING TOOLS




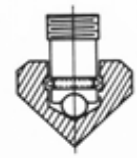

Ball thrust bearing in flaring cone minimizes friction, makes operation easier.

### 37° HEAVY DUTY FLARING TOOL
**For 1/8", 3/16", 1/4", 5/16", 3/8", and 1/2" O.D. tubing.**

447-F Forms 37° flares in annealed stainless steel (MIL-T-6345 or AMS5566), cold drawn stainless steel and annealed copper or aluminum tubing. Built to withstand continuous rugged service. Ball thrust bearing mechanism reduces effort required. Hardened tool steel die features non-slip grip of tubing, even after repetitive flaring. Bar has vise extension. Wt. 3.25 lbs.

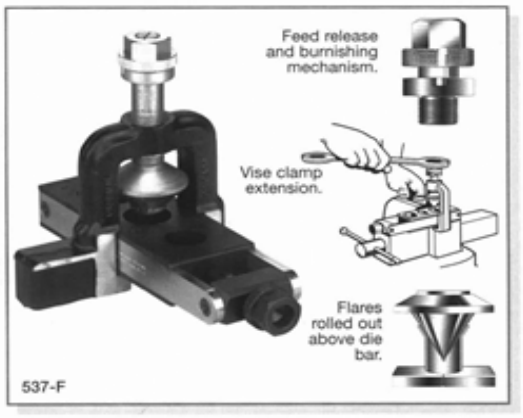


### LARGE SIZE 37° ROL-AIR® FLARING TOOLS
**For 3/4", 7/8", 1", 1-1/4", 1-1/2" and 2" O.D. tubing.**

Three cylinders in flaring cone roll out 37° flare above die block. Flares soft steel, copper, aluminum and fully annealed stainless steel tubing. Roller action cuts effort required; maintains original wall thickness; eliminates stress concentration. Feed release and burnishing action. Vise clamp extension on yoke. Heat treated dies clamp tubing without marking it. Satin chrome and black nickel finish. Furnished in tool case.

537-F Flares and burnishes 3/4", 7/8", 1", and 1-1/4" O.D. tubing. Wt. 13.0 lbs.

637-F Flares and burnishes 1-1/4", 1-1/2", and 2" O.D. tubing. Wt. 13.0 lbs.

*Conforms to Federal Specification GGG-F-451a,Type 1, Class 1, Style B.

### 37° PRECISION FLARING TOOL
**For 1/8", 3/16", 1/4", 5/16", 3/8", 1/2", 5/8", 3/4", 1", 1-1/4" and 1-1/2'' O.D. tubing.**

# Rohr-Endbearbeitungsmaschinen
## TUBE/PIPE END-FINISHING MACHINES





**2-CPV**



**3-CPV**

## CAPACITY RANGE FOR END-FINISHING MACHINES

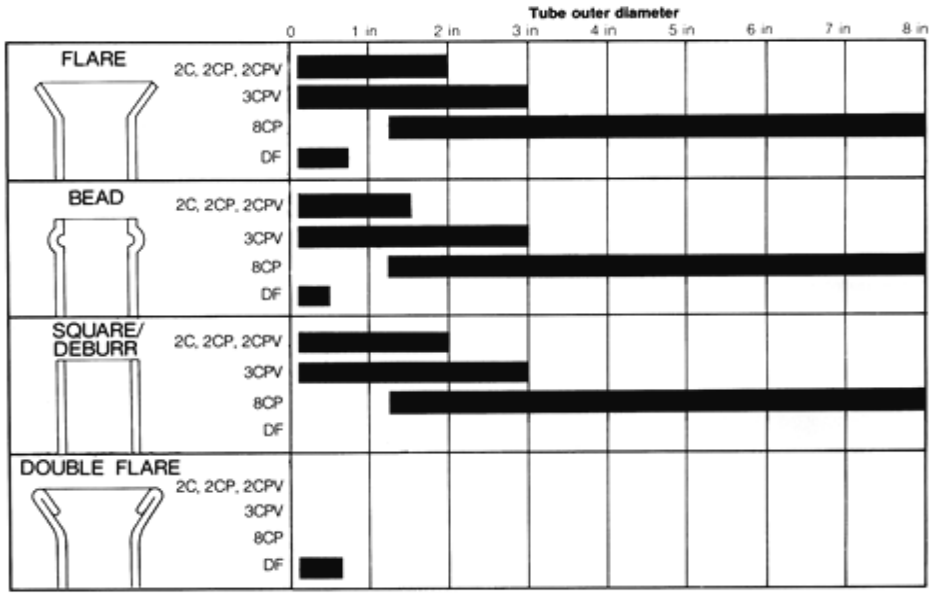


**Nähere Angaben auf Anfrage** / MORE INFORMATION ON REQUEST !

# Hartmetall-Entgratmesser
## CARBIDE DEBURRING BLADES

**Dicke 1,59 mm /** THICKNESS 1/16"

**Zur Verwendung in Entgratköpfen /** USED IN CONJUNCTION WITH SQUARING & DEBURRING HEADS



| 437C-1 | 437C-2 | 437C-3 |
|---|---|---|

| **Beschreibung** | DESCRIPTION | **Art.Nr**./PART-NO. |
|---|---|---|
| **kpl. Satz** | CPL. SET | **437C** |
| **Plan-Messer** | SQUARE BLADE | **437C-1** |
| **Innen-Messer** | INSIDE BLADE | **437C-2** |
| **Aussen-Messer** | OUTSIDE BLADE | **437C-3** |

# SEILHÄMMERGERÄT FÜR SEILSCHUHE
# CABLE SWAGING TOOLS

|  | 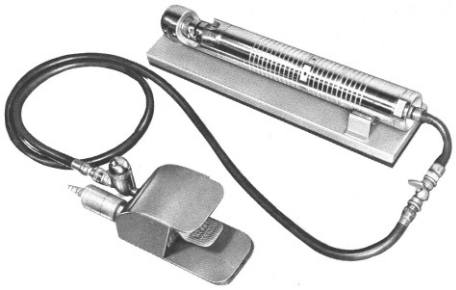 |  |
|---|---|---|
| **520JK** | **520J** | **520SG** |
| **Werkzeugsatz zum Pressen von Seilschuhen, bestehend aus: Werkzeugkiste, Seilhämmergerät 520J, Lehre 520SG und alle nachfolgend aufgeführten Einsätze.**<br><br>CABLE SWAGER KIT EXIST OF: TOOL-BOX, SWAGER 520J, GAGE 520SG AND ALL DIES AS PER FOLLOWING LIST. | **Pneumatisches Seilhämmergerät**<br><br>PNEUMATIC CABLE SWAGER | **Prüflehre**<br><br>SWAGING GAUGE |

**Für Seilschuhe mit Kugel und Doppelschaftenden**

FOR DOUBLE SHANK BALL END TERMINALS

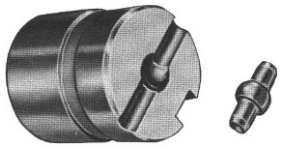

| Artikel-Nr. PART NO. | Seilmaß CABLE DIA | Seilschuh Ref. TERMINAL REF. |
|---|---|---|
| 520CDB-2 | 1/16" | MS20663-2 |
| 520CDB-3 | 3/32" | MS20663-3 |
| 520CDB-4 | 1/8" | MS20663-4 |
| 520CDB-5 | 5/32" | MS20663-5 |
| 520CDB-6 | 3/16" | MS20663-6 |

**Für Seilschuhe mit Kugel und Einfachschaftende**

FOR SINGLE SHANK BALL END TERMINALS

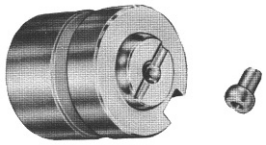

| | | |
|---|---|---|
| 520CSB-2 | 1/16" | MS20664-2 |
| 520CSB-3 | 3/32" | MS20664-3 |
| 520CSB-4 | 1/8" | MS20664-4 |
| 520CSB-5 | 5/32" | MS20664-5 |
| 520CSB-6 | 3/16" | MS20664-6 |

**Für Seilschuhe mit einfacher Kugel**

FOR PLAIN BALL END TERMINALS

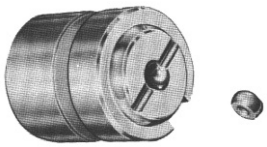

| | | |
|---|---|---|
| 520CB-2 | 1/16" | RA2487 |
| 520CB-3 | 3/32" | RA2487 |
| 520CB-4 | 1/8" | RA2487 |

**Für Seilschuhe mit Zylinderschaftenden**

FOR SLEEVE TYPE TERMINALS

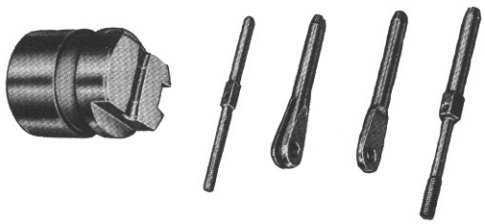

| | | |
|---|---|---|
| 520CS-2 | 1/16" | -2 |
| 520CS-3 | 3/32" | -3 |
| 520CS-4 | 1/8" | -4 |
| 520CS-5 | 5/32" | -5 |
| 520CS-6 | 3/16" | -6 |
| 520CS-7 | 7/32" | -7 |
| 520CS-8 | 1 /4" | -8 |

**Einsätze zum Ablängen von Kabeln *****

CABLE CUT-OFF AND TRIM DIES ***

***

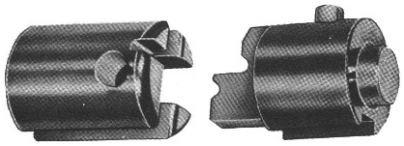

| Matritze Nr. DIE NO. | Seilmaß CABLE DIA. | Stempel Nr. CUTTER NO. |
|---|---|---|
| 520CD-2 | 1/16" | 520CP-2 |
| 520CD-3 | 3/32" | 520CP-3 |
| 520CD-4 | 1/8" | 520CP-4 |
| 520CD-5 | 5/32" | 520CP-5 |
| 520CD-6 | 3/16" | 520CP-6 |
| 520CD-7 | 7/32" | 520CP-7 |
| 520CD-8 | 1 /4" | 520CP-8 |

***** Einsätze zum Ablängen werden einzeln verkauft, übrige Einsätze paarweise.**
ALL SWAGING DIES SOLD IN PAIRS. TRIM DIES SOLD INDIVIDUALLY

# Zugfestigkeitstester für Seilschuhe
# SWAGED CABLE TERMINAL PULL TESTER KIT

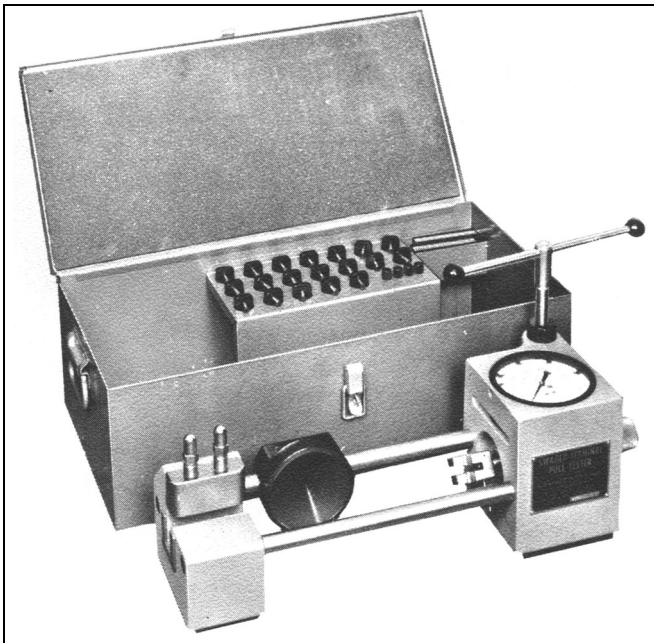

## 520CT
**Testgerät einzeln**
PULL TESTER ONLY

## 520CTK
**Zugfestgkeitstester-Satz**
PULL TESTER KIT

**Bestehend aus: /** EXIST OF:

| **Artikel-Nr.** PART NO. | **Beschreibung** | **DESCRIPTION** |
|---|---|---|
| **520 CT** | Prüfgerät mit Handgriff und Backenhalter | PULL TESTER WITH HANDLE AND JAW HOLDER |
| **520 CTB** | Aufbewahrungskasten | CARRYING CASE |
| **520 CTD-1** | Block | BLOCK |
| **520 CTD-2** | Backen für 1/16" Kabeldurchmesser (1,59 mm) | JAWS FOR 1/16" CABLE DIAMETER |
| **520 CTD-3** | Backen für 3/32" Kabeldurchmesser (2,38 mm) | JAWS FOR 3/32" CABLE DIAMETER |
| **520 CTD-4** | Backen für 1/8" Kabeldurchmesser (3,18 mm) | JAWS FOR 1/8" CABLE DIAMETER |
| **520 CTD-5** | Backen für 5/32" Kabeldurchmesser (3,97 mm) | JAWS FOR 5/32" CABLE DIAMETER |
| **520 CTD-6** | Backen für 3/16" Kabeldurchmesser (4,76 mm) | JAWS FOR 3/16" CABLE DIAMETER |
| **520 CTD-7** | Backen für 7/32" Kabeldurchmesser (5,56 mm) | JAWS FOR 7/32" CABLE DIAMETER |
| **520 CTD-8** | Backen für 1/4" Kabeldurchmesser (6,35 mm) | JAWS FOR 1/4" CABLE DIAMETER |
| **520 CTF-5** | Adapter für 5/32" AN667 Seilschuhe | ADAPTER FOR 5/32" AN667 TERMINAL |
| **520 CTF-6** | Adapter für 3/16" AN667 Seilschuhe | ADAPTER FOR 3/16" AN667 TERMINAL |
| **520 CTF-7** | Adapter für 7/32" AN667 Seilschuhe | ADAPTER FOR 7/32" AN667 TERMINAL |
| **520 CTF-8** | Adapter für 1/4" AN667 Seilschuhe | ADAPTER FOR 1/4" AN667 TERMINAL |
| **520 CTS-2** | Adapter für 1/16" AN663 & AN664 Seilschuhe | ADAPTER FOR 1/16" AN663 & AN664 TERMINAL |
| **520 CTS-3** | Adapter für 3/32" AN663 & AN664 Seilschuhe | ADAPTER FOR 3/32" AN663 & AN664 TERMINAL |
| **520 CTS-4** | Adapter für 1/8" AN663 & AN664 Seilschuhe | ADAPTER FOR 1/8" AN663 & AN664 TERMINAL |
| **520 CTS-5** | Adapter für 5/32" AN663 & AN664 Seilschuhe | ADAPTER FOR 5/32" AN663 & AN664 TERMINAL |
| **520 CTS-6** | Adapter für 3/16" AN663 & AN664 Seilschuhe | ADAPTER FOR 3/16" AN663 & AN664 TERMINAL |
| **520 CTT-2** | Adapter für 1/16" AN666 & AN669 Seilschuhe Re. | ADAPTER FOR 1/16" AN666 & AN669 TERMINAL RH TA´D |
| **520 CTT-3** | Adapter für 3/32" AN666 & AN669 Seilschuhe Re. | ADAPTER FOR 3/32" AN666 & AN669 TERMINAL RH TA´D |
| **520 CTT-4** | Adapter für 1/8" AN666 & AN669 Seilschuhe Re. | ADAPTER FOR 1/8" AN666 & AN669 TERMINAL RH TA´D |
| **520 CTT-4** | Adapter für 5/32" AN666 & AN669 Seilschuhe Re. | ADAPTER FOR 5/32" AN666 & AN669 TERMINAL RH TA´D |
| **520 CTT-6** | Adapter für 3/16" AN666 & AN669 Seilschuhe Re. | ADAPTER FOR 3/16" AN666 & AN669 TERMINAL RH TA´D |
| **520 CTT-7** | Adapter für 7/32" AN666 & AN669 Seilschuhe Re. | ADAPTER FOR 7/16" AN666 & AN669 TERMINAL RH TA´D |
| **520 CTT-20** | Adapter für 1/16" AN666 & AN669 Seilschuhe Li. | ADAPTER FOR 1/16" AN666 & AN669 TERMINAL LH TH´D |
| **520 CTT-30** | Adapter für 3/32" AN666 & AN669 Seilschuhe Li. | ADAPTER FOR 3/32" AN666 & AN669 TERMINAL LH TH´D |
| **520 CTT-40** | Adapter 1/8 & 5/32 AN666 & AN669 Seilschuhe Li. | ADAPTER 1/8 & 5/32 AN666 & AN669 TERMINAL LH TH´D |
| **520 CTT-60** | Adapter für 3/16" AN666 & AN669 Seilschuhe Li. | ADAPTER FOR 3/16" AN666 & AN669 TERMINAL LH TH´D |
| **520 CTT-70** | Adapter 1/4 & 7/32 AN666 & AN669 Seilschuhe Li. | ADAPTER 1/4 & 7/16" AN666 & AN669 TERMINAL LH TH´D |
| **520 CTP-1** | Stift 3/16" für AN667 & AN668 Seilschuhe | PIN 3/16" FOR AN667 & AN668 TERMINAL |
| **520 CTP-2** | Stift 1/4" für AN667 & AN668 Seilschuhe | PIN 1/4" FOR AN667 & AN668 TERMINAL |
| **520 CTP-3** | Stift 5/16" für AN667 & AN668 Seilschuhe | PIN 5/16" FOR AN667 & AN668 TERMINAL |
| **520 CTP-4** | Stift 3/8" für AN667 & AN668 Seilschuhe | PIN 3/8" FOR AN667 & AN668 TERMINAL |

**Backen werden paarweise gefertigt. Alle vorgenannten Teile sind einzeln erhältlich**
JAWS ARE FURNISHED IN PAIRS. ALL LISTED ITEMS CAN BE PURCHASED SEPARATELY

# Tragbares Gerät zum Aufpressen von Seilschuhen
## PORTABLE SWAGING MACHINE KIT
## LOCOLOC® Hand Swager Type 1 - Mod. M1-K

This portable, hand operated roll type swaging machine, shown below, will swage MS type terminals onto galvanized and stainless steel cables from 1/16" diameter up to and including 3/16" diameter. Marine-industrial terminals can also be assembled if the terminals have the same outside diameter and bore diameters as standard MS terminals before swaging. The LOCOLOC®-Kearney Type 1 Roll Swaging Kit, which includes the machine, guide adapters in a steel carrying and storage case, a full set of roll dies, terminal gauges, and feed is pictured and itemized below.

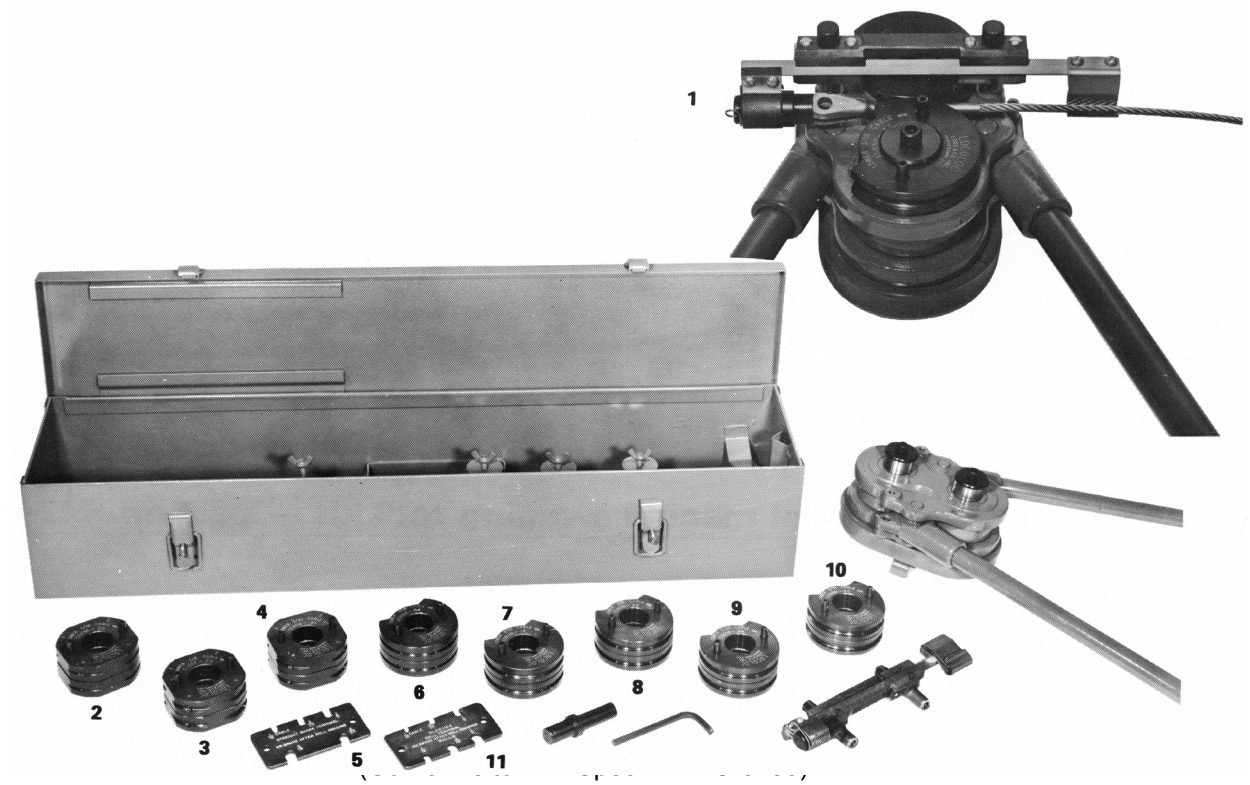


| Index No. | Part No. | Old Kearney Part No. | Part Name | Qty. |
|---|---|---|---|---|
| 1 | M1 (74) | 7-4 | Swaging Machine with Case, Allen Wrench, Feed Guide Assembly and Feed Guide Adapters | 1 |
| 2 | M1-B2 | 12748-10 | Shank-Type Ball Terminal Roll Assy. (for 1/16 inch cable) | 1 |
| 3 | M1-B3 | 12748-11 | Shank-Type Ball Terminal Roll Assy. (for 3/32 inch cable) | 1 |
| 4 | M1-B4 | 12748-12 | Shank-Type Ball Terminal Roll Assy. (for 1/8 inch cable) | 1 |
| 5 | GA-B24 | 12971-1 | Ball-Type Terminal Gage (1/16-1/8 inch cable) | 1 |
| 6 | M1-S2 | 13655-7 | Straight-Shank Terminal Roll Assy. (for 1/16 inch cable) | 1 |
| 7 | M1-S3 | 13655-17 | Straight-Shank Terminal Roll Assy. (for 3/32 inch cable) | 1 |
| 8 | M1-S4 | 13655-27 | Straight-Shank Terminal Roll Assy. (for 1/8 inch cable) | 1 |
| 9 | M1-S5 | 13655-37 | Straight-Shank Terminal Roll Assy. (for 5/32 inch cable) | 1 |
| 10 | M1-S6 | 13655-47 | Straight-Shank Terminal Roll Assy. (for 3/16 inch cable) | 1 |
| 11 | GA-S26 | 12971-2 | Staight-Shank Terminal Gauge 1/16 - 3/ 16 inch cable) | 1 |

**LOCOLOC® -KEARNEY Portable Swaging Machine Kit (As illustrated) contains the following:**
1 ea. M1 LOCOLOC®-KEARNEY Type 1 Portable Swaging Machine
3 ea. Ball Terminal Rolls (Dies) to fit 1/16", 3/32" & 1/8" Cable
5 ea. Shank Terminal Rolls (Dies) to fit 1/16", 3/32", 1/8", 5/32" & 3/16" Cable
1 ea. Gauge for Ball Terminals (Part No. GA-B24)
1 ea. Gauge for Straight Shank Terminals (Part No. GA-S26)
1 ea. Steel Carrying Case

**PART NO. M1-K TYPE 1 PORTABLE SWAGING MACHINE KIT AS DESCRIBED ABOVE**
(Shipping Wgt. appr. 64 lbs./ca. 29 kg)

# Seilspannungs-Messgeräte
## CABLE TENSIOMETER



**T60 Series**

| Model No. | For use on Cables | Range in Lbs. | Riser Used |
|---|---|---|---|
| T60-1001-C8-1A | 1/16, 3/32, 1/8 | 10 - 200 | - |
| | 5/32, 3/16 | 30 - 200 | - |
| | 7/32, 1/4 | 80 - 200 | - |
| T60-1001-C9-1A | 1/8, 5/32, 3/16, 7/32, 1/4 | 150 - 450 | - |
| T60-1002-C8-00 | 3CWT, 5CWT, 10CWT | 10 - 200 | - |
| | 15CWT, 25CWT | 30 - 200 | - |
| | 35CWT, 45CWT | 80 - 200 | - |

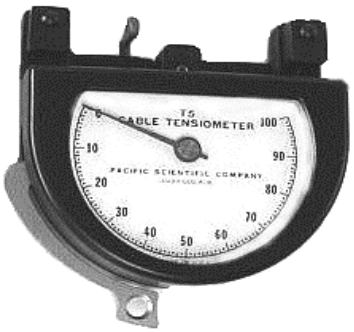


**T5-2000 Series**

| Model No. | For use on Cables | Range in Lbs. | Riser Used |
|---|---|---|---|
| T5-2002-101-00 | 1/16, 3/32, 1/8 | 10 - 100 | No. 1 |
| | 5/32, 3/16 | 15 - 150 | No. 2C |
| | 7/32, 1/4 | 25 - 150 | No. 3 |
| T5-2002-103-00 | 1/16, 3/32, 1/8 | 30 - 160 | No. 1 |
| | 5/32, 3/16 | 30 - 200 | No. 2C |
| | 7/32, 1/4 | 30 - 150 | No. 3 |
| T5-2002-104-00 | 1/16, 3/32, 1/8 | 30 - 200 | No. 1 |
| | 5/32, 3/16 | 30 - 300 | No. 2C |
| | 7/32, 1/4 | 30 - 300 | No. 3 |
| T5-2002-104A-00 | 1/16, 3/32 | 30 - 300 | No. 1 |
| | 1/8, 5/32, 3/16 | 30 - 300 | No. 2C |
| | 7/32, 1/4 | 30 - 300 | No. 3 |
| T5-2002-105-00 | 1/16, 3/32, 1/8 | 30 - 200 | No. 1 |
| | 5/32, 3/16 | 30 - 400 | No. 2C |
| | 7/32, 1/4 | 30 - 400 | No. 3 |
| T5-2002-301-00 | 3, 5, 10 (CWT) | 10 - 100 | No. 1 |
| | 15, 25 (CWT) | 15 - 150 | No. 2C |
| | 35, 45 (CWT) | 25 - 150 | No. 3 |
| T5-2002-304-00 | 3, 5, 10 (CWT) | 30 - 200 | No. 1 |
| | 15, 25 (CWT) | 30 - 300 | No. 2C |
| | 35, 45 (CWT) | 30 - 300 | No. 3 |
| T5-2002-401-00 | 1/16, 3/32, 1/8 | 10 - 100 | No. 1 |
| | 5/32, 3/16 | 15 - 150 | No. 2C |
| | 7/32, 1/4 | 25 - 150 | No. 3 |
| | 10, 15 (CWT) | 5 - 100 | No. 1 |
| | 15 (CWT) | 5 - 150 | No. 2C |
| | 20, 25 (CWT) | 5 - 150 | No. 2C |
| | 70 (CWT) | 25 - 150 | No. 3 |
| T5-2004-113-00 | 1/16, 3/32, 1/8 | 10 - 100 | No. 1 |
| T5-2006-115-00 | 1/16 | 5 - 60 | No. 1 |

# Seilspannungs-Messgeräte
## CABLE TENSIOMETER

| Model No. | For use on Cables | Range in Lbs. | Riser Used |
|---|---|---|---|
| T5-8002-104B-00 | 1/16 | 5 - 300 | No. 1 |
| | 3/32, 1/8 | 5 - 300 | No. 2 |
| | 5/32, 3/16 | 5 - 300 | No. 2C |
| | 7/32, 1/4 | 5 - 300 | No. 3A |
| T5-8002-105-00 | 1/16, 3/32, 1/8 | 30 - 200 | No. 1 |
| | 5/32, 3/16 | 30 - 400 | No. 2C |
| | 7/32, 1/4 | 30 - 400 | No. 3 |
| T5-8002-211-00 | 1/16, 3/32, 1/8 | 35 - 350 | No. 2 |
| T5-8002-401-00 | 1/16, 3/32, 1/8 | 10 - 100 | No. 1 |
| | 5/32, 3/16 | 15 - 150 | No. 2C |
| | 7/32, 1/4 | 25 - 150 | No. 3 |
| | 10, 15 (CWT) | 5 - 100 | No. 1 |
| | 15 (CWT) | 5 - 150 | No. 2C |
| | 20, 25 (CWT) | 5 - 150 | No. 2C |
| | 70 (CWT) | 25 - 150 | No. 3 |
| T5-8003-106-00 | 3/16, 7/32, 1/4 | 40 - 600 | No. 2C |
| | 5/16 | 40 - 600 | No. 3A |
| T5-8003-107-00 | 3/16, 7/32, 1/4 | 100 - 800 | No. 2C |
| | 5/16 | 100 - 800 | No. 3A |
| T5-8003-108-00 | 3/16, 7/32, 1/4 | 200 - 1000 | No. 2C |
| | 5/16 | 200 - 1000 | No. 3A |
| T5-8003-209-00 | 1/4, 5/16, 3/8 | 200 - 400 | No. 4 |
| T5-8005-109-00 | 3/16 | 250 - 1300 | No. 2 |
| | 7/32, 1/4 | 250 - 1300 | No. 2C |
| | 5/16 | 250 - 1300 | No. 3A |
| T5-8005-110-00 | 3/16 | 300 - 1600 | No. 2 |
| | 7/32, 1/4 | 300 - 1600 | No. 2C |
| | 5/16 | 300 - 1600 | No. 3A |
| T5-8005-111-00 | 3/16 | 500 - 2000 | No. 2 |
| | 7/32, 1/4 | 500 - 2000 | No. 2C |
| T5-8008-106-00 | 1/8, 5/32 | 40 - 600 | No. 2 |
| | 3/16 | 40 - 600 | No. 2C |
| | 1/4 | 40 - 600 | No. 3 |
| T5-8008-306-00 | 10, 15 (CWT) | 40 - 600 | No. 2 |
| | 25 (CWT) | 40 - 600 | No. 2C |
| | 45 (CWT) | 40 - 600 | No. 3 |
| T5-8103-406-00 | 3/16, 7/32, 1/4 | 40 - 600 | No. 2C |
| | 5/16 | 40 - 600 | No. 3A |
| | 5, 10, 15 (CWT) | 25 - 125 | No. 1 |
| | 20, 25 (CWT) | 25 - 125 | No. 2 |
| | 25 (CWT) | 150 - 250 | No. 2 |
| | 45 (CWT) | 200 - 1400 | No. 3A |
| | 80 (CWT) | 200 - 600 | No. 3A |
| | 80 (CWT) | 600 - 1400 | No. 3B |
| T5-8203-108-00 | 3/8 | 200 - 1000 | No. 3B |

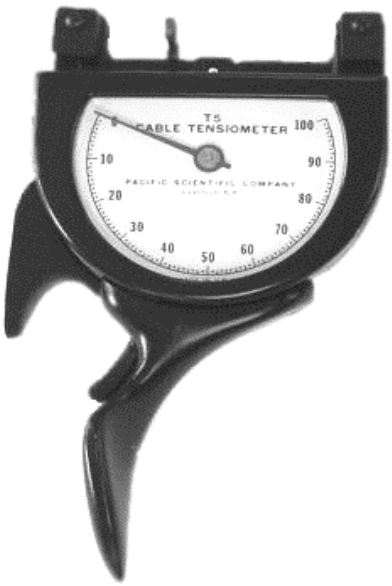


**T5-8000 Series**

# Heli-Coil - Handeinbauwerkzeuge
# HELI-COIL HAND INSERTING TOOLS

**TABLE IX — HELI-COIL HAND INSERTING TOOLS**

| NOMINAL THREAD SIZE | HAND INSERTING TOOLS 3 Dia. Lengths Thru 7/8 2 Dia. Lengths 1" and up |
|---|---|
| **UNIFIED COARSE** | |
| 2 (.086)-56 | 551-02 |
| 3 (.099)-48 | 551-03 |
| 4 (.112)-40* | 7551-04 |
| 5 (.125)-40 | 7551-05 |
| 6 (.138)-32 | 7551-06 |
| 8 (.164)-32* | 7551-2 |
| 10 (.190)-24* | 7551-3 |
| 12 (.216)-24 | 7551-1 |
| 1/4 (.2500)-20 | 7551-4 |
| 5/16 (.3125)-18 | 7551-5 |
| 3/8 (.3750)-16 | 7551-6 |
| 7/16 (.4375)-14 | 7551-7 |
| 1/2 (.5000)-13 | 7551-8 |
| 9/16 (.5625)-12 | 3724-9 |
| 5/8 (.6250)-11 | 3724-10 |
| 3/4 (.7500)-10 | 3724-12 |
| 7/8 (.8750)- 9 | 3724-14 |
| 1 (1.0000)- 8 | 3724-16 |
| 1-1/8 (1.1250)- 7 | 3724-18 |
| 1-1/4 (1.2500)- 7 | 3724-20 |
| 1-3/8 (1.3750)- 6 | 3724-22 |
| 1-1/2 (1.5000)- 6 | 3724-24 |

| NOMINAL THREAD SIZE | HAND INSERTING TOOLS 3 Dia. Lengths Thru 7/8 2 Dia. Lengths 1" and up |
|---|---|
| **UNIFIED FINE** | |
| 3 (.099)-56 | 7552-03 |
| 4 (.112)-48 | 7552-04 |
| 6 (.138)-40 | 7552-06 |
| 8 (.164)-36 | 7552-2 |
| 10 (.190)-32 | 7552-3 |
| 1/4 (.2500)-28 | 7552-4 |
| 5/16 (.3125)-24 | 7552-5 |
| 3/8 (.3750)-24 | 7552-6 |
| 7/16 (.4375)-20 | 7552-7 |
| 1/2 (.5000)-20 | 7552-8 |
| 9/16 (.5625)-18 | 535-9 |
| 5/8 (.6250)-18 | 535-10 |
| 3/4 (.7500)-16 | 535-12 |
| 7/8 (.8750)-14 | 535-14 |
| 1 (1.0000)-14 | 535-16 |
| 1 (1.0000)-12 | 535-161 |
| 1-1/8 (1.1250)-12 | 535-18 |
| 1-1/4 (1.2500)-12 | 535-20 |
| 1-3/8 (1.3750)-12 | 535-22 |
| 1-1/2 (1.5000)-12 | 535-24 |

*Special tools required to install Phosphor Bronze and Inconel X Inserts in these sizes. To order add "-9" to the part number shown.

The various designs of *Heli-Coil* hand inserting tools are pictured. Generally, finer pitch inserts are proportionately larger in the free state than coarse pitch inserts and thus have to be "pre-wound" to a smaller diameter for installation. Large coarse pitch inserts (and 2-56 and 3-48 inserts) need only a threaded mandrel tool for installation.




**TYPE I**
**THREADED MANDREL**
Sizes 2-56 and 3-48
(Prefix 551)

**TYPE II**
**PREWINDER**
#4 thru 1/2" UNC
#3 thru 1/2" UNF
(Prefixes 7551 and 7552)

**TYPE III**
**THREADED MANDREL**
9/16" thru 1½" UNC
(Prefix 3724)

**TYPE IV**
**NON-CAPTIVE PREWINDER**
9/16" thru 1½" UNF
(Prefix 535)

**TABLE X — HELI-COIL HAND INSERTING TOOL DIMENSIONS**

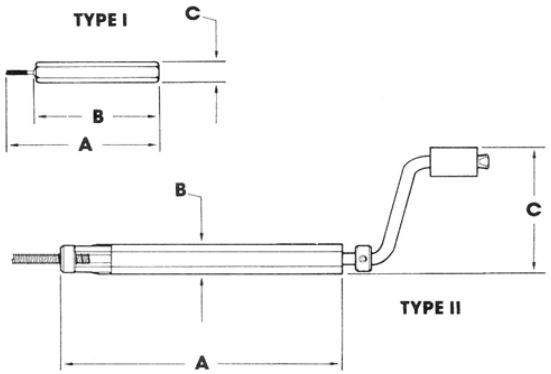


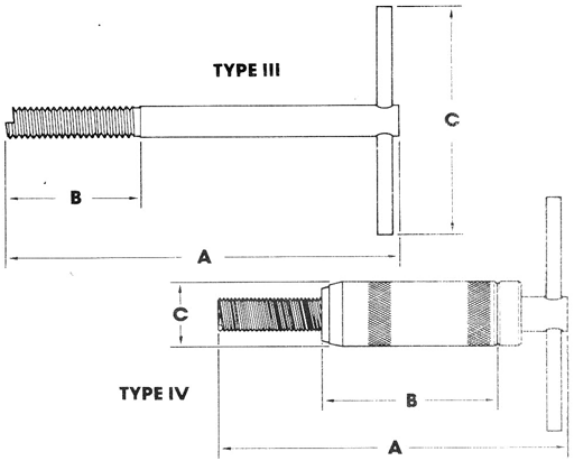


| SIZE | A | B | C |
|---|---|---|---|
| **TYPE I** | | | |
| 2-56 | 2-7/16 | 2 | 5/16 |
| 3-56 | 6 | 3 | 5/8 |
| **TYPE II — UNC & UNF** | | | |
| #4 | 4-5/8 | 3/8 | 2-9/32 |
| #5 | 4-5/8 | 3/8 | 2-9/32 |
| #6 | 4-5/8 | 3/8 | 2-9/32 |
| #8 | 4-5/8 | 3/8 | 2-9/32 |
| #10 | 4-5/8 | 15/32 | 2-9/32 |
| #12 | 4-5/8 | 33/64 | 2-17/32 |
| 1/4" | 4-5/8 | 33/64 | 2-17/32 |
| 5/16" | 4-5/8 | 5/8 | 3-23/32 |
| 3/8" | 5 | 45/64 | 3-23/32 |

| SIZE | A | B | C |
|---|---|---|---|
| **TYPE II — UNC & UNF (cont'd)** | | | |
| 7/16" | 5-1/4 | 25/32 | 3-23/32 |
| 1/2" | 5-1/2 | 7/8 | 3-23/32 |
| **TYPE III — UNC** | | | |
| 9/16-12 | 4-7/8 | 1-13/16 | 4 |
| 5/8-11 | 4-7/8 | 2 | 4 |
| 3/4-10 | 4-7/8 | 2-3/8 | 4 |
| 7/8-9 | 4-7/8 | 2-3/4 | 4-1/2 |
| 1-8 | 4-7/8 | 2-1/8 | 4-1/2 |
| 1-1/8-7 | 6-3/4 | 2-1/2 | 6 |
| 1-1/4-7 | 6-3/4 | 2-3/4 | 6 |
| 1-3/8-6 | 6-3/4 | 3 | 6 |
| 1-1/2-6 | 6-3/4 | 3-1/4 | 6 |

| SIZE | A | B | C |
|---|---|---|---|
| **TYPE IV — UNF** | | | |
| 9/16-18 | 5-3/8 | 2-7/8 | 1-1/8 |
| 5/8-18 | 5-3/8 | 2-7/8 | 1-1/8 |
| 3/4-16 | 6 | 2-7/8 | 1-1/2 |
| 7/8-14 | 6-3/8 | 2-7/8 | 1-1/2 |
| 1-14 | 5-7/8 | 2-7/8 | 1-5/8 |
| 1-12 | 5-7/8 | 2-7/8 | 1-5/8 |
| 1-1/8-12 | 6-5/16 | 3-1/16 | 2 |
| 1-1/4-12 | 6-13/16 | 3-5/16 | 2 |
| 1-3/8-12 | 7-5/16 | 3-9/16 | 2-1/4 |
| 1-1/2-12 | 7-13/16 | 3-13/16 | 2-1/4 |

# Heli-Coil - Handgewindebohrer
# HELI-COIL HAND TAPS

**STRAIGHT FLUTE** - Widely used for general hand and machine tapping operations. Available in sizes thru 1½".

**PLUG STYLE**



**(4 Thread Chamfer)** - Used in thru holes and in blind holes that allow for ample chip clearance. Are easier starting and require less tapping torque than bottoming taps.

**BOTTOMING STYLE**



**(2 Thread Chamfer)** - Used in blind holes drilled to a minimum depth and that require threads close to the bottom of the hole.

**SPIRAL POINTED & SPIRAL FLUTE** - Used for efficient chip disposal in production tapping operations. Available in sizes thru 1/2".

**SPIRAL POINTED - PLUG**



**(4 Thread Chamfer)** - Incorporates an angular grind at the point end of the tap which shears chips and drives them forward of the tap. Used widely in long thru holes and blind holes with ample chip clearance. They are free cutting and provide increased tap strength. Not recommended for abrasive materials.

**HIGH SPIRAL FLUTE - BOTTOMING**



**(2 Thread Chamfer)** - Have spiral flute for efficiently pulling stringy chips out of deep or blind holes in soft materials.

**ROUGHING TAPS** - Are available for difficult tapping operations where it is desirable to reduce the load on the finishing tap. Available in sizes 7/16 - 1".

**TABLE VI — HELI-COIL STI TAP PART NUMBERS**

| NOMINAL THREAD SIZE | STRAIGHT FLUTE | | | | SPIRAL POINT | | HIGH SPIRAL FLUTE | | ROUGHING TAP |
|---|---|---|---|---|---|---|---|---|---|
| | PLUG | | BOTTOMING | | PLUG | | BOTTOMING | | |
| | 3B | 2B | 3B | 2B | 3B | 2B | 3B | 2B | |
| **UNIFIED COARSE** | | | | | | | | | |
| 2 (.086)-56 | 02CPB | 02CPA | 02CBB | 02CBA | 02CSB | 02CSA | 5905-02 | 6905-02 | |
| 3 (.099)-48 | 03CPB | 03CPA | 03CBB | 03CBA | 03CSB | 03CSA | 5905-03 | 6905-03 | |
| 4 (.112)-40 | 04CPB | 04CPA | 04CBB | 04CBA | 04CSB | 04CSA | 5905-04 | 6905-04 | |
| 5 (.125)-40 | 05CPB | 05CPA | 05CBB | 05CBA | 05CSB | 05CSA | 5905-05 | 6905-05 | |
| 6 (.138)-32 | 06CPB | 06CPA | 06CBB | 06CBA | 06CSB | 06CSA | 5905-06 | 6905-06 | |
| 8 (.164)-32 | 2CPB | 2CPA | 2CBB | 2CBA | 2CSB | 2CSA | 5905-2 | 6905-2 | |
| 10 (.190)-24 | 3CPB | 3CPA | 3CBB | 3CBA | 3CSB | 3CSA | 5905-3 | 6905-3 | |
| 12 (.216)-24 | 1CPB | 1CPA | 1CBB | 1CBA | 1CSB | 1CSA | 5905-1 | 6905-1 | |
| 1/4 (.2500)-20 | 4CPB | 4CPA | 4CBB | 4CBA | 4CSB | 4CSA | 5905-4 | 6905-4 | |
| 5/16 (.3125)-18 | 5CPB | 5CPA | 5CBB | 5CBA | 5CSB | 5CSA | 5905-5 | 6905-5 | |
| 3/8 (.3750)-16 | 6CPB | 6CPA | 6CBB | 6CBA | 6CSB | 6CSA | 5905-6 | 6905-6 | |
| 7/16 (.4375)-14 | 7CPB | 7CPA | 7CBB | 7CBA | 7CSB | 7CSA | 5905-7 | 6905-7 | 7CRU |
| 1/2 (.5000)-13 | 8CPB | 8CPA | 8CBB | 8CBA | 8CSB | 8CSA | 5905-8 | 6905-8 | 8CRU |
| 9/16 (.5625)-12 | 187-9 | 38187-9 | 4187-9 | 43187-9 | | | | | 9CRU |
| 5/8 (.6250)-11 | 8187-10 | 18187-10 | 10187-10 | 20187-10 | | | | | 10CRU |
| 3/4 (.7500)-10 | 8187-12 | 18187-12 | 10187-12 | 20187-12 | | | | | 12CRU |
| 7/8 (.8750)- 9 | 8187-14 | 18187-14 | 10187-14 | 20187-14 | | | | | 14CRU |
| 1 (1.0000)- 8 | 8187-16 | 18187-16 | 10187-16 | 20187-16 | | | | | 16CRU |
| 1-1/8 (1.1250)- 7 | 8187-18 | 18187-18 | 10187-18 | 20187-18 | | | | | |
| 1-1/4 (1.2500)- 7 | 8187-20 | 18187-20 | 10187-20 | 20187-20 | | | | | |
| 1-3/8 (1.3750)- 6 | 8187-22 | 18187-22 | 10187-22 | 20187-22 | | | | | |
| 1-1/2 (1.5000)- 6 | 8187-24 | 18187-24 | 10187-24 | 20187-24 | | | | | |
| **UNIFIED FINE** | | | | | | | | | |
| 3 (.099)-56 | 03FPB | 03FPA | 03FBB | 03FBA | 03FSB | 03FSA | 5906-03 | 6906-03 | |
| 4 (.112)-48 | 04FPB | 04FPA | 04FBB | 04FBA | 04FSB | 04FSA | 5906-04 | 6906-04 | |
| 6 (.138)-40 | 06FPB | 06FPA | 06FBB | 06FBA | 06FSB | 06FSA | 5906-06 | 6906-06 | |
| 8 (.164)-36 | 2FPB | 2FPA | 2FBB | 2FBA | 2FSB | 2FSA | 5906-2 | 6906-2 | |
| 10 (.190)-32 | 3FPB | 3FPA | 3FBB | 3FBA | 3FSB | 3FSA | 5906-3 | 6906-3 | |
| 1/4 (.2500)-28 | 4FPB | 4FPA | 4FBB | 4FBA | 4FSB | 4FSA | 5906-4 | 6906-4 | |
| 5/16 (.3125)-24 | 5FPB | 5FPA | 5FBB | 5FBA | 5FSB | 5FSA | 5906-5 | 6906-5 | |
| 3/8 (.3750)-24 | 6FPB | 6FPA | 6FBB | 6FBA | 6FSB | 6FSA | 5906-6 | 6906-6 | |
| 7/16 (.4375)-20 | 7FPB | 7FPA | 7FBB | 7FBA | 7FSB | 7FSA | 5906-7 | 6906-7 | 7FRU |
| 1/2 (.5000)-20 | 8FPB | 8FPA | 8FBB | 8FBA | 8FSB | 8FSA | 5906-8 | 6906-8 | 8FRU |
| 9/16 (.5625)-18 | 38193-9 | 18193-9 | 43193-9 | 20193-9 | | | | | 9FRU |
| 5/8 (.6250)-18 | 8193-10 | 18193-10 | 10193-10 | 20193-10 | | | | | 10FRU |
| 3/4 (.7500)-16 | 8193-12 | 18193-12 | 10193-12 | 20193-12 | | | | | 12FRU |
| 7/8 (.8750)-14 | 8193-14 | 18193-14 | 10193-14 | 20193-14 | | | | | 14FRU |
| 1 (1.0000)-14 | 8193-16 | 18193-16 | 10193-16 | 20193-16 | | | | | 16FRU |
| 1 (1.0000)-12 | 8193-161 | 18183-161 | 10193-161 | 20193-161 | | | | | 161FRU |
| 1-1/8 (1.1250)-12 | 8193-18 | 18193-18 | 10193-18 | 20193-18 | | | | | |
| 1-1/4 (1.2500)-12 | 8193-20 | 18193-20 | 10193-20 | 20193-20 | | | | | |
| 1-3/8 (1.3750)-12 | 8193-22 | 18193-22 | 10193-22 | 20193-22 | | | | | |
| 1-1/2 (1.5000)-12 | 8193-24 | 18193-24 | 10193-24 | 20193-24 | | | | | |

# Heli-Coil - Handgewindebohrer
# HELI-COIL HAND TAPS

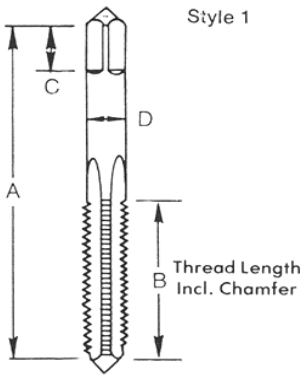


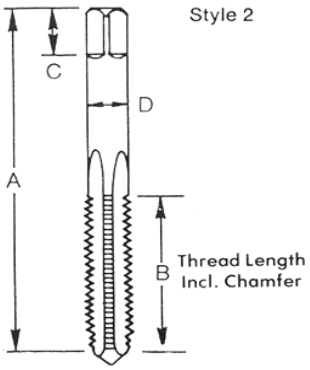


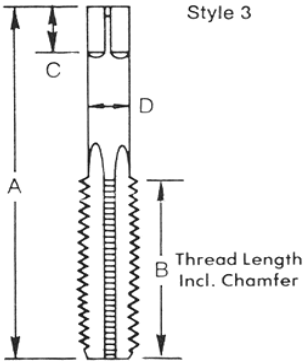


**TABLE VII — HELI-COIL STI TAP DIMENSIONS**

| NOMINAL THREAD SIZE | TAP DIMENSIONS: LENGTH OVER ALL A | LENGTH OF THREAD B | LENGTH OF SQUARE C | MAX DIA. OF SHANK D | MAX SIZE OF SQUARE | NUMBER OF FLUTES: STRAIGHT FLUTE | SPIRAL POINT PLUG | SPIRAL FLUTE BOTT. | STYLE* | H LIMITS: 3B | 2B |
|---|---|---|---|---|---|---|---|---|---|---|---|
| **UNIFIED COARSE** | | | | | | | | | | | |
| 2 (.086)-56 | 1-7/8 | 9/16 | 3/16 | .141 | .110 | 3 | 2 | 2 | 1 | H1 | H2 |
| 3(.099)-48 | 1-15/16 | 5/8 | 3/16 | .141 | .110 | 3 | 2 | 2 | 1 | H1 | H2 |
| 4 (.112)-40 | 2 | 11/16 | 3/16 | .141 | .110 | 3 | 2 | 2 | 1 | H1 | H2 |
| 5 (.125)-40 | 2-1/8 | 3/4 | 1/4 | .168 | .131 | 3 | 2 | 3 | 1 | H1 | H2 |
| 6 (.138)-32 | 2-3/8 | 7/8 | 1/4 | .194 | .152 | 3 | 2 | 3 | 1 | H2 | H3 |
| 8 (.164)-32 | 2-3/8 | 15/16 | 9/32 | .220 | .165 | 3 | 2 | 3 | 1 | H2 | H3 |
| 10 (.190)-24 | 2-1/2 | 1 | 5/16 | .255 | .191 | 3 | 2 | 3 | 2 | H2 | H3 |
| 12 (.216)-24 | 2-23/32 | 1-1/8 | 3/8 | .318 | .238 | 3 | 2 | 3 | 2 | H2 | H3 |
| 1/4 (.2500)-20 | 2-23/32 | 1-1/8 | 3/8 | .318 | .238 | 3 | 2 | 3 | 2 | H2 | H3 |
| 5/16 (.3125)-18 | 2-15/16 | 1-1/4 | 7/16 | .381 | .286 | 4 | 3 | 3 | 2 | H3 | H4 |
| 3/8 (.3750)-16 | 3-3/8 | 1-21/32 | 7/16 | .367 | .275 | 4 | 3 | 3 | 3 | H3 | H4 |
| 7/16 (.4375)-14 | 3-19/32 | 1-21/32 | 1/2 | .429 | .322 | 4 | 3 | 4 | 3 | H3 | H4 |
| 1/2 (.5000)-13 | 3-13/16 | 1-13/16 | 9/16 | .480 | .360 | 4 | 3 | 4 | 3 | H3 | H4 |
| 9/16 (.5625)-12 | 4-1/32 | 1-13/16 | 5/8 | .542 | .406 | 4 | — | — | 3 | H3 | H4 |
| 5/8 (.6250)-11 | 4-1/4 | 2 | 11/16 | .590 | .442 | 4 | — | — | 3 | H3 | H4 |
| 3/4 (.7500)-10 | 4-11/16 | 2-7/32 | 3/4 | .697 | .523 | 4 | — | — | 3 | H3 | H5 |
| 7/8 (.8750)- 9 | 5/18 | 2-1/2 | 13/16 | .800 | .600 | 4 | — | — | 3 | H3 | H5 |
| 1 (1.0000)- 8 | 5-3/4 | 2-9/16 | 1 | 1.021 | .766 | 4 | — | — | 3 | H4 | H6 |
| 1-1/8 (1.1250)- 7 | 6-1/16 | 3 | 1-1/16 | 1.108 | .831 | 4 | — | — | 3 | H4 | H6 |
| 1-1/4 (1.2500)- 7 | 6-3/8 | 3 | 1-1/8 | 1.233 | .925 | 4 | — | — | 3 | H4 | H6 |
| 1-3/8 (1.3750)- 6 | 6-11/16 | 3-3/16 | 1-1/8 | 1.305 | .979 | 6 | — | — | 3 | H6 | H8 |
| 1-1/2 (1.5000)- 6 | 7 | 3-3/16 | 1-1/4 | 1.430 | 1.072 | 6 | — | — | 3 | H6 | H8 |
| **UNIFIED FINE** | | | | | | | | | | | |
| 3 (.099)-56 | 1-15/16 | 5/8 | 3/16 | .141 | .110 | 3 | 2 | 2 | 1 | H1 | H2 |
| 4 (.112)-48 | 2 | 11/16 | 3/16 | .141 | .110 | 3 | 2 | 2 | 1 | H1 | H2 |
| 6 (.138)-40 | 2-1/8 | 3/4 | 1/4 | .168 | .131 | 3 | 2 | 3 | 1 | H1 | H2 |
| 8 (.164)-36 | 2-3/8 | 15/16 | 9/32 | .220 | .165 | 3 | 2 | 3 | 1 | H1 | H2 |
| 10 (.190)-32 | 2-1/2 | 1 | 5/16 | .255 | .191 | 3 | 2 | 3 | 2 | H2 | H3 |
| 1/4 (.2500)-28 | 2-23/32 | 1-1/8 | 3/8 | .318 | .238 | 3 | 2 | 3 | 2 | H2 | H3 |
| 5/16 (.3125)-24 | 2-15/16 | 1-1/4 | 7/16 | .381 | .286 | 4 | 3 | 3 | 2 | H2 | H3 |
| 3/8 (.3750)-24 | 3-5/32 | 1-7/16 | 13/32 | .323 | .242 | 4 | 3 | 3 | 3 | H2 | H3 |
| 7/16 (.4375)-20 | 3-3/8 | 1-21/32 | 7/16 | .367 | .275 | 4 | 3 | 3 | 3 | H3 | H4 |
| 1/2 (.5000)-20 | 3-19/32 | 1-21/32 | 1/2 | .429 | .322 | 4 | 3 | 4 | 3 | H3 | H4 |
| 9/16 (.5625)-18 | 3-13/16 | 1-13/16 | 9/16 | .480 | .360 | 4 | — | — | 3 | H3 | H4 |
| 5/8 (.6250)-18 | 4-1/32 | 1-13/16 | 5/8 | .542 | .406 | 4 | — | — | 3 | H3 | H4 |
| 3/4 (.7500)-16 | 4-15/32 | 2 | 11/16 | .652 | .489 | 4 | — | — | 3 | H3 | H4 |
| 7/8 (.8750)-14 | 5-1/8 | 2-1/2 | 13/16 | .800 | .600 | 4 | — | — | 3 | H3 | H4 |
| 1 (1.0000)-14 | 5-7/16 | 2-9/16 | 7/8 | .896 | .672 | 4 | — | — | 3 | H4 | H6 |
| 1 (1.0000)-12 | 5-7/16 | 2-9/16 | 7/8 | .896 | .672 | 4 | — | — | 3 | H4 | H6 |
| 1-1/8 (1.1250)-12 | 5-3/4 | 2-9/16 | 1 | 1.021 | .766 | 6 | — | — | 3 | H4 | H6 |
| 1-1/4 (1.2500)-12 | 6-1/16 | 3 | 1-1/16 | 1.108 | .831 | 6 | — | — | 3 | H4 | H6 |
| 1-3/8 (1.3750)-12 | 6-3/8 | 3 | 1-1/8 | 1.233 | .925 | 6 | — | — | 3 | H4 | H6 |
| 1-1/2 (1.5000)-12 | 6-11/16 | 3-3/16 | 1-1/8 | 1.305 | .979 | 6 | — | — | 3 | H4 | H6 |

*NOTE: All bottoming taps have male center on thread end removed.

# Heli-Coil - Gewindelehrdorne
# HELI-COIL THREAD GAGES

## HeliCoil THREAD GAGES

Accuracy of the finished thread, when the insert is installed, is dependent upon the accuracy of the tapped hole. If the finished tapped hole gages satisfactorily, the installed insert will be within the thread tolerance. ***It is not necessary to gage the installed insert.*** After the insert is installed, the GO thread plug gage may not enter freely; however, the insert will always seat itself when the bolt or screw is installed and tightened. (Reference MS33537)

Gage handles and all gage nibs are marked with the extreme product limits for the particular size and class of fit. (See Page 11, Table 5, Pitch Diameter Limits)

When gaging tapped holes which have been thoroughly cleaned or which have a protective finish applied, the gage should always be lubricated with light oil.

HI nib may enter provided a definite drag results on or before 3rd turn from entry - Ref. FED-STD-H28, Screw Thread Standards for Federal Services.

*Heli-Coil* STI Thread Plug Gages for checking the tapped hole are listed in the accompanying table.

Working gages provide a guaranteed minimum wear allowance on the pitch diameter of the GO members of two ten thousandths of an inch (.0002). These gages are recommended for production in sizes 1/2 inch and smaller.

Reference Gages have pitch diameters on or close to minimum (basic size). They are essentially laboratory or master gages and should be used in case of conflict between two working gages, which sometimes arises due to one of them having received more use and wear.

**TABLE VIII — HELI-COIL THREAD PLUG GAGES**

| NOMINAL THREAD SIZE | WORKING GAGES — SUGGESTED FOR LONGER WEAR LIFE | | REFERENCE GAGES — SUGGESTED AS MASTER GAGES | |
|---|---|---|---|---|
| | 3B | 2B | 3B | 2B |
| **UNIFIED COARSE** | | | | |
| 2 (.086)-56 | 3688-02 | 1442-02 | 1688-02 | 1440-02 |
| 3 (.099)-48 | 3688-03 | 1442-03 | 1688-03 | 1440-03 |
| 4 (.112)-40 | 3688-04 | 1442-04 | 1688-04 | 1440-04 |
| 5 (.125)-40 | 3688-05 | 1442-05 | 1688-05 | 1440-05 |
| 6 (.138)-32 | 3688-06 | 1442-06 | 1688-06 | 1440-06 |
| 8 (.164)-32 | 3688-2 | 1442-2 | 1688-2 | 1440-2 |
| 10 (.190)-24 | 3688-3 | 1442-3 | 1688-3 | 1440-3 |
| 12 (.216)-24 | 3688-1 | 1442-1 | 1688-1 | 1440-1 |
| 1/4 (.2500)-20 | 3688-4 | 1442-4 | 1688-4 | 1440-4 |
| 5/16 (.3125)-18 | 3688-5 | 1442-5 | 1688-5 | 1440-5 |
| 3/8 (.3750)-16 | 3688-6 | 1442-6 | 1688-6 | 1440-6 |
| 7/16 (.4375)-14 | 3688-7 | 1442-7 | 1688-7 | 1440-7 |
| 1/2 (.5000)-13 | 3688-8 | 1442-8 | 1688-8 | 1440-8 |
| 9/16 (.5625)-12 | | | 1688-9 | 1440-9 |
| 5/8 (.6250)-11 | | | 1688-10 | 1440-10 |
| 3/4 (.7500)-10 | | | 1688-12 | 1440-12 |
| 7/8 (.8750)- 9 | | | 1688-14 | 1440-14 |
| 1 (1.0000)- 8 | | | 1688-16 | 1440-16 |
| 1-1/8 (1.1250)- 7 | | | 1688-18 | 1440-18 |
| 1-1/4 (1.2500)- 7 | | | 1688-20 | 1440-20 |
| 1-3/8 (1.3750)- 6 | | | 1688-22 | 1440-22 |
| 1-1/2 (1.5000)- 6 | | | 1688-24 | 1440-24 |
| **UNIFIED FINE** | | | | |
| 3 (.099)-56 | 3694-03 | 1443-03 | 1694-03 | 1441-03 |
| 4 (.112)-48 | 3694-04 | 1443-04 | 1694-04 | 1441-04 |
| 6 (.138)-40 | 3694-06 | 1443-06 | 1694-06 | 1441-06 |
| 8 (.164)-36 | 3694-2 | 1443-2 | 1694-2 | 1441-2 |
| 10 (.190)-32 | 3694-3 | 1443-3 | 1694-3 | 1441-3 |
| 1/4 (.2500)-28 | 3694-4 | 1443-4 | 1694-4 | 1441-4 |
| 5/16 (.3125)-24 | 3694-5 | 1443-5 | 1694-5 | 1441-5 |
| 3/8 (.3750)-24 | 3694-6 | 1443-6 | 1694-6 | 1441-6 |
| 7/16 (.4375)-20 | 3694-7 | 1443-7 | 1694-7 | 1441-7 |
| 1/2 (.5000)-20 | 3694-8 | 1443-8 | 1694-8 | 1441-8 |
| 9/16 (.5625)-18 | | | 1694-9 | 1441-9 |
| 5/8 (.6250)-18 | | | 1694-10 | 1441-10 |
| 3/4 (.7500)-16 | | | 1694-12 | 1441-12 |
| 7/8 (.8750)-14 | | | 1694-14 | 1441-14 |
| 1 (1.0000)-14 | | | 1694-16 | 1441-16 |
| 1 (1.0000)-12 | | | 1694-161 | 1441-161 |
| 1-1/8 (1.1250)-12 | | | 1694-18 | 1441-18 |
| 1-1/4 (1.2500)-12 | | | 1694-20 | 1441-20 |
| 1-3/8 (1.3750)-12 | | | 1694-22 | 1441-22 |
| 1-1/2 (1.5000)-12 | | | 1694-24 | 1441-24 |




**HELI-COIL sTi GAGE WITH GO AND HI MEMBERS**

# SLIMSERT - Handeinbauwerkzeuge
# SLIMSERT - HAND INSERTING TOOLS

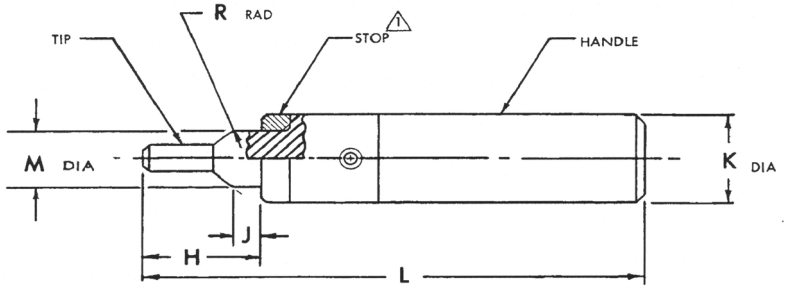


## Swage Tool

| Tool Number | STOP Number | H +/- .015 | J +.000 -.010 | K DIA | L +/- .060 | M DIA min. | R RAD |
|---|---|---|---|---|---|---|---|
| SR 08 S-A | SR 08 S-2 | .126 | .038 | .31 | 3.808 | .103 | .015 |
| SR 11 S-A | SR 11 S-2 | .185 | .051 | .43 | 3.808 | .103 | .015 |
| SR 14 S-A | SR 14 S-2 | .205 | .055 | .43 | 3.985 | .161 | .015 |
| SR 16 S-A | SR 16 S-2 | .205 | .061 | .43 | 3.985 | .192 | .015 |
| SR 19 S-A | SR 19 S-A-2 | .273 | .077 | .43 | 4.055 | .211 | .015 |
| SR 25 S-A | SR 25 S-2 | .348 | .075 | .50 | 4.085 | .280 | .030 |
| SR 31 S-A | SR 31 S-A-2 | .423 | .072 | .56 | 4.270 | .345 | .040 |
| SR 37 S-A | SR 37 S-A-2 | .513 | .096 | .62 | 4.488 | .408 | .045 |
| SR 43 S-A | SR 43 S-2 | .548 | .100 | .62 | 4.548 | .470 | .045 |
| SR 50 S-A | SR 50 S-A-2 | .548 | .100 | .75 | 4.665 | .536 | .045 |
| SR 56 S-A | SR 56 S-2 | .501 | .119 | 1.00 | 4.905 | .605 | .040 |
| SR 62 S-A | SR 62 S-2 | .501 | .119 | 1.00 | 4.905 | .669 | .040 |
| SR 75 S-A | SR 75 S-2 | .501 | .130 | 1.00 | 4.905 | .798 | .075 |
| SR 87 S-A | SR 87 S-2 | .501 | .130 | 1.25 | 5.148 | .929 | .075 |
| SR 93 S-A | SR 93 S-2 | .501 | .147 | 1.38 | 5.295 | .985 | .075 |

**Notes**: Replacment Nylon Stops are available; see Table for part numbers.
When replacing Stop, press on to seat with countersink against shoulder.

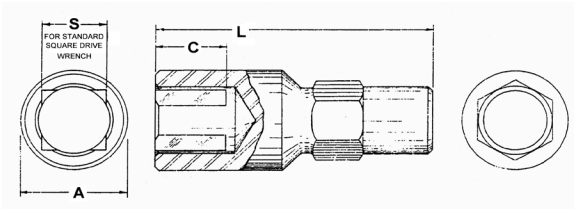


## Wrench - 6 Point

| Wrench Part-Number | A DIA. | C | L (REF) | S |
|---|---|---|---|---|
| SR 11 W-A | .44 | .28 | .84 | 1/4" |
| SR 14 W-A | .44 | .28 | .87 | 1/4" |
| SR 16 W-A | .44 | .28 | .90 | 1/4" |
| SR 19 W-A | .44 | .28 | .94 | 1/4" |
| SR 25 W-A | .44 | .28 | 1.03 | 1/4" |
| SR 31 W-A | .44 | .28 | 1.12 | 1/4" |
| SR 37 W-A | .62 | .40 | 1.39 | 3/8" |
| SR 43 W-A | .62 | .40 | 1.48 | 3/8" |
| SR 50 W-A | .62 | .40 | 1.58 | 3/8" |
| SR 56 W-A | .75 | .40 | 1.66 | 3/8" |
| SR 62 W-A | .88 | .40 | 1.75 | 3/8" |
| SR 75 W-A | 1.0 | .40 | 1.94 | 3/8" |

**Bemerkung:**
Einbauwerkzeuge **"KT8000H..."** sind nicht mehr lieferbar und werden ersetzt durch die Werkzeuge gem. nebenstehender Tabelle. Sie benötigen jetzt 1 Eindrehwerkzeuge und 1 Aufweitwerkzeug.

**Notice:**
Installation Tools **"KT8000H..."** are obsolete and replaced by the tools listed beside.
You need now 1 Wrench Tool and 1 Swage Tool.

| OLD Tool No. | New Swage Tool No. | | New Wrench Tool No. |
|---|---|---|---|
| KT8000H-02 | SR 08 S-A | + | - |
| KT8000H-04 | SR 11 S-A | + | SR 11 W-A |
| KT8000H-06 | SR 14 S-A | + | SR 14 W-A |
| KT8000H-08 | SR 16 S-A | + | SR 16 W-A |
| KT8000H-3 | SR 19 S-A | + | SR 19 W-A |
| KT8000H-4 | SR 25 S-A | + | SR 25 W-A |
| KT8000H-5 | SR 31 S-A | + | SR 31 W-A |
| KT8000H-6 | SR 37 S-A | + | SR 37 W-A |
| KT8000H-7 | SR 43 S-A | + | SR 43 W-A |
| KT8000H-8 | SR 50 S-A | + | SR 50 W-A |
| KT8000H-9 | SR 56 S-A | + | SR 56 W-A |
| KT8000H-10 | SR 62 S-A | + | SR 62 W-A |
| KT8000H-12 | SR 75 S-A | + | SR 75 W-A |
| KT8000H-14 | SR 87 S-A | + | - |
| KT8000H-15 | SR 93 S-A | + | - |

# Cyclo Poliermaschine
# CYCLO DUAL HEAD POLISHER



**Model 6CE-Pro**

## Model 6CE-Pro

- Power Supply: 220-240 V a.c., 220 Watts, meets European CE Standards
- Motor: Alternating current, semi-enclosed 24-bar commutator
- Variable Speed Range: **650 - 3000 orbits/minute**
- Output: 1/3 H.P. (.25 Kw)
- Weight: 6.5 lb. (2.9 kg)
- Head Rotation/Diameter: Clockwise/4" • Electric Cord: 2.5 m
- Housing: Heavy-duty cast aluminium

## Foam Bonnet Pads



**White Finishing Pads**
**Recommended Applications:**
• Extreme Shine • Final Wax Buff
• Wax Applications • Sealant • Metal Sealant

**72-110**

This superfine pad is used in final buffing, after initial polishing with other pads. Excellent for applying sealants and buffing out wax.



**Blue Polishing Pads**
**Recommended Applications:**
• Paint/Metal Sealant • Paint Polish • Paint Cleaner • Final Wax Buff • Wax Application

**72-115**

The perfect pad for light polishing on any surface. Use with wax and polish for a fine gloss finish or to remove swirl marks.



**Green Polishing Pads**
**Recommended Applications:**
• Sealant • Paint Polish
• Paint Cleaner • Metal Sealant

**72-120**

A more aggressive pad than the white or blue pads. The pore density makes it perfect for polishing and removing light oxidation for a stunning shine.



**Yellow Cutting Pads**
**Recommended Applications:**
• Paint Polish/Cleaner • Paint Compound
• Paint Deox • Paint Scratch Remover

**72-135**

A firm, versatile pad that can be used on everything from compounding and scratch removal to applying paint cleaners and polishes.



**Orange Compounding and Polishing Pads**
**Recommended Applications:**
• Paint Polish/Cleaner • Paint Deox
• Paint Compound • Metal/Chrome Polish

**72-145**

An exceptional, all-in-one cleaning and polishing pad. This high density pad has the power to remove lights scratches and polish the surface.

## Pad Covers



**Cotton Terry Pad Cover**
**Recommended Applications:**
• Final Wax Buff
• Upholstery

**73-550**

## Brushes



**White Standard Carpet Brush**
**Recommended Applications:**
• Auto & RV Carpets & Interior
• Tile & Grout • Durable Carpets

**76-840x2***

Designed for more vigorous cleaning. It is recommended for floor pads and more durable carpets. This Brush is stiffer and less giving, but more durable than the Soft Brush.



**Black Stiff Scrub Brush**
**Recommended Applications:**
• Tile & Grout
• Truck Bed Liners

**76-870x2***

The most aggressive brush. This brush provides exceptional scrubbing power on tough surfaces. Used for cleaning tile, stone floors, and pick-up truck bed liners.



**Gray Ultra Soft Upholstery Brush**
**Recommended Applications:**
• Upholstery • Fine Carpets
• Fine Interiors

**76-810x2***

The ideal brush for delicate surfaces. Each bristle is "flagged", a technique that splits ends into multiple fine tips. Ideal for use on headliners, leather, and other fragile upholstery, and natural fiber fine carpets.



**Aqua Soft Carpet Brush**
**Recommended Applications:**
• Fine Carpets • Durable Carpets
• Auto & RV Carpets & Upholstery

**76-830x2***

This brush features medium crimped bristles for a gentle yet thorough cleaning. Each brush kneads and vibrates loose any soil or debris and is perfect for most carpets.

*** two VES Weight Inserts P/N 20-076 are required to attach the Brushes**

## Proguard Orbital Backing Plate



**The Backing Plate is required to attach all Foam Pads to the 6CE-Pro.**

**79-112x2**

### ORBITAL VERSUS ROTARY ACTION



**Orbital Action:** Buffs, polishes and sands with a motion just like that of the human hand! Hundreds of times faster than hand motion, no tendency to "get away" from the operator. Smooth, hand-like action safeguards against surface damage.
***Recommended for Basecoat/Clearcoat finishes.***

**Rotary Polishing Action:** High speed outer rim of "single action" rotary polishers can gouge, burn and mar surfaces causing costly damage in a split second. Unsightly swirl marks are always distributing and downright ugly.
***Not recommended for use on Basecoat/Clearcoat finishes unless foam pads are used.***



# Flugzeugbauer Kit
## SHEET METAL TOOL KIT

## EH-ATK




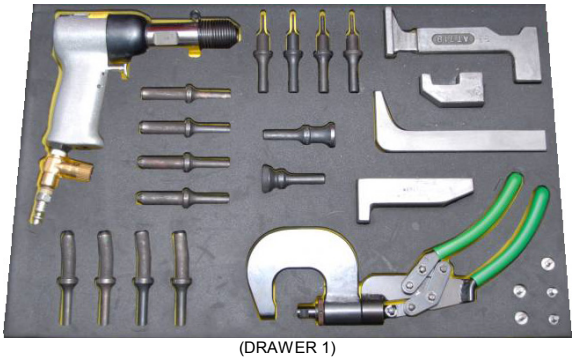

(DRAWER 1)

### DRAWER 1:

| Item | Part-Number | Description | Qty/Set |
|---|---|---|---|
| 01. | **3X-SP** | PNEUM. RIVET HAMMER | 1 |
| 02. | **100A3-3/32** | DÖPPER / RIVET SET | 1 |
| 03. | **100A3-1/8** | DÖPPER / RIVET SET | 1 |
| 04. | **100A3-5/32** | DÖPPER / RIVET SET | 1 |
| 05. | **100A3-3/16** | DÖPPER / RIVET SET | 1 |
| 06. | **101A3-3/32** | DÖPPER / RIVET SET | 1 |
| 07. | **101A3-1/8** | DÖPPER / RIVET SET | 1 |
| 08. | **101A3-5/32** | DÖPPER / RIVET SET | 1 |
| 09. | **101A3-3/16** | DÖPPER / RIVET SET | 1 |
| 10. | **107A-1 (ST-90)** | FLACHDÖPPER / RIVET SET, FLUSH | 1 |
| 11. | **110CA 3/4 (TP91)** | FLACHDÖPPER / RIVET SET, FLUSH | 1 |
| 12. | **612** | GEGENHALTEEISEN / BUCKING BAR | 1 |
| 13. | **634** | GEGENHALTEEISEN / BUCKING BAR | 1 |
| 14. | **639** | GEGENHALTEEISEN / BUCKING BAR | 1 |
| 15. | **719** | GEGENHALTEEISEN / BUCKING BAR | 1 |
| 16. | **141A3-3/32** | NIETAUSTREIBER / KNOCK-OUT PUNCH | 1 |
| 17. | **141A3-1/8** | NIETAUSTREIBER / KNOCK-OUT PUNCH | 1 |
| 18. | **141A3-5/32** | NIETAUSTREIBER / KNOCK-OUT PUNCH | 1 |
| 19. | **141A3-3/16** | NIETAUSTREIBER / KNOCK-OUT PUNCH | 1 |
| 20. | **410510** | EINHAND-NIETZANGE OHNE BÜGEL NZ62<br>HAND RIVET SQUEEZER | 1 |
| 21. | **417007** | C-BÜGEL / C-YOKE 40 X 45 MM X 4,8 MM | 1 |
| 22. | **109AN-1/8** | NIETEINSATZ/RIVET SET | 1 |
| 23. | **109AP-1/4** | NIETEINSATZ/RIVET SET | 1 |
| 24. | **109AR-3/8** | NIETEINSATZ/RIVET SET | 1 |
| 25. | **108AP-3/32** | NIETEINSATZ/RIVET SET | 1 |
| 26. | **108AP-1/8** | NIETEINSATZ/RIVET SET | 1 |

### DRAWER 2:

| Item | Part-Number | Description | Qty/Set |
|---|---|---|---|
| 27. | **2071Z-24** | AUTOM. HEFTNADEL<br>TEMPORARY FASTERNER, CLECO STYLE | 50 |
| 28. | **2071Z-32** | AUTOM. HEFTNADEL<br>TEMPORARY FASTERNER, CLECO STYLE | 50 |
| 29. | **2071Z-40** | AUTOM. HEFTNADEL<br>TEMPORARY FASTERNER, CLECO STYLE | 50 |
| 30. | **2071Z-48** | AUTOM. HEFTNADEL<br>TEMPORARY FASTERNER, CLECO STYLE | 50 |
| 31. | **TP-74** | HEFTNADELZANGE<br>PLIER FOR TEMPORARY FASTENER | 2 |
| 32. | **2072KU-24** | SCHRAUBHEFTNADEL<br>TEMPORARY FASTENER | 50 |
| 33. | **2072KU-32** | SCHRAUBHEFTNADEL<br>TEMPORARY FASTENER | 50 |
| 34. | **2072KU-40** | SCHRAUBHEFTNADEL<br>TEMPORARY FASTENER | 50 |
| 35. | **2072KU-48** | SCHRAUBHEFTNADEL<br>TEMPORARY FASTENER | 50 |
| 36. | **2072KU-24 X 15** | SCHRAUBHEFTNADEL<br>TEMPORARY FASTENER | 10 |
| 37. | **2072KU-32 X 15** | SCHRAUBHEFTNADEL<br>TEMPORARY FASTENER | 10 |
| 38. | **2072KU-40 X 15** | SCHRAUBHEFTNADEL<br>TEMPORARY FASTENER | 10 |
| 39. | **2072KU-48 X 15** | SCHRAUBHEFTNADEL<br>TEMPORARY FASTENER | 10 |
| 40. | **KSG-1/2 X 1/2** | BLECHKLEMME / CLAMP | 10 |
| 41. | **KSG-1/2 X 1** | BLECHKLEMME / CLAMP | 10 |
| 42. | **P 400** | SPANNZANGE / Toggle Plier KNU-VISE | 5 |
| 43. | **P800** | SPANNZANGE / Toggle Plier KNU-VISE | 2 |

### DRAWER 3:

| Item | Part-Number | Description | Qty/Set |
|---|---|---|---|
| 44. | **1410** | PNEUM. BOHRMASCHINE / DRILL 0.33 HP | 1 |
| 45. | **332B** | OFFSET ANGLE DRILL 1/4-28 | 1 |
| 46. | **11-303** | THREADED SHANK ADAPTER DRILL<br>STUB SERIES, 3/32 | 1 |
| 47. | **11-305** | THREADED SHANK ADAPTER DRILL<br>STUB SERIES, 1/8 | 1 |
| 48. | **11-307** | THREADED SHANK ADAPTER DRILL<br>STUB SERIES, 5/32 | 1 |
| 49. | **11-309** | THREADED SHANK ADAPTER DRILL<br>STUB SERIES, 3/16 | 1 |
| 50. | **53606 (04-102)** | AIRCRAFT EXTENSION DRILL 6 x 3/32 | 2 |
| 51. | **53608 (04-104)** | AIRCRAFT EXTENSION DRILL 6 x 1/8 | 2 |
| 52. | **04-106 (53610)** | AIRCRAFT EXTENSION DRILL 6 x 5/32 | 2 |
| 53. | **04-108 (53612)** | AIRCRAFT EXTENSION DRILL 6 x 3/16 | 2 |
| 54. | **52606 (36961) (06-302)** | AIRCRAFT EXTENSION DRILL 12 x 3/32 | 2 |
| 55. | **52608 (36962) 06-304** | AIRCRAFT EXTENSION DRILL 12 x 1/8 | 2 |
| 56. | **52610 (06-306)** | AIRCRAFT EXTENSION DRILL 12 x 5/32 | 2 |
| 57. | **52612 (36966) (06-308)** | AIRCRAFT EXTENSION DRILL 12 x 3/16 | 2 |
| 58. | **ZT 330 S** | MICRO STOP COUNTERSINK UNIT 1/4-28 | 1 |
| 59. | **445E4-3/32** | SENKER / COUNTERSINK CUTTER 100° | 1 |
| 60. | **445E4-1/8** | SENKER / COUNTERSINK CUTTER 100° | 1 |
| 61. | **445E4-5/32** | SENKER / COUNTERSINK CUTTER 100° | 1 |
| 62. | **445E4-3/16** | SENKER / COUNTERSINK CUTTER 100° | 1 |
| 63. | **402-3/32 (2,4 MM)** | ANSCHLAGSENKER 100°<br>MINIATURE STOP COUNTERSINK CUTTER | 1 |
| 64. | **402-1/8 (3,2 MM)** | ANSCHLAGSENKER 100°<br>MINIATURE STOP COUNTERSINK CUTTER | 1 |
| 65. | **402-5/32 (4,0 MM)** | ANSCHLAGSENKER 100°<br>MINIATURE STOP COUNTERSINK CUTTER | 1 |
| 66. | **402-3/16 (4,8 MM)** | ANSCHLAGSENKER 100°<br>MINIATURE STOP COUNTERSINK CUTTER | 1 |
| 67. | **CTP093-3/32** | BURRAWAY TOOL TYPE A | 1 |
| 68. | **CTP125-1/8** | BURRAWAY TOOL TYPE A | 1 |
| 69. | **CTP156-5/32** | BURRAWAY TOOL TYPE A | 1 |
| 70. | **CTP187-3/16** | BURRAWAY TOOL TYPE A | 1 |
| 71. | **570-10** | BOHRSTOP 4,91 MM / DRILL STOP | 1 |
| 72. | **570-21** | BOHRSTOP 4,04 MM / DRILL STOP | 1 |
| 73. | **570-30** | BOHRSTOP 3,26 MM / DRILL STOP | 1 |
| 74. | **570-40** | BOHRSTOP 2,50 MM / DRILL STOP | 1 |
| 75. | **350-.1875-100-.0938** | CTS. CUTTER , STRAIGHT SHANK<br>3/16 X 100 X 3/32 COBALT | 1 |
| 76. | **350-.2500-100-.1250** | CTS. CUTTER , STRAIGHT SHANK<br>1/4 X 100 X 1/8 COBALT | 1 |
| 77. | **350-.3125-100-.1562** | CTS. CUTTER , STRAIGHT SHANK<br>5/16 X 100 X 5/32 COBALT | 1 |
| 78. | **350-.3750-100-.1875 (5831)** | CTS. CUTTER , STRAIGHT SHANK<br>3/8 X 100 X 3/16 COBALT | 1 |
| 79. | **514** | EDGE BREAKER | 1 |
| 80. | **512** | SPÄNEHAKEN/CHIP CHASER | 1 |

# Flugzeugbauer Kit
# SHEET METAL TOOL KIT

## DRAWER 4:

| Item | Part-Number | Description | Qty/Set |
|---|---|---|---|
| 81. | **TP-6721** | MASSEBÜRSTEN 3/32 / HOLE BRUSH | 1 |
| 82. | **TP-6741** | MASSEBÜRSTEN 1/8 / HOLE BRUSH | 1 |
| 83. | **TP-6761** | MASSEBÜRSTEN 5/32 / HOLE BRUSH | 1 |
| 84. | **TP-6781** | MASSEBÜRSTEN 3/16 / HOLE BRUSH | 1 |
| 85. | **532-61** | BOHRSCHABLONE<br>DRILL DUPLICATOR #40 | 1 |
| 86. | **532-62** | BOHRSCHABLONE<br>DRILL DUPLICATOR #30 | 1 |
| 87. | **532-63** | BOHRSCHABLONE<br>DRILL DUPLICATOR #21 | 1 |
| 88. | **532-65** | BOHRSCHABLONE<br>DRILL DUPLICATOR #10 | 1 |
| 89. | **4244-1** | HSS TAPER ROUTER | 1 |
| 90. | **4244-2** | HSS TAPER ROUTER | 1 |
| 91. | **4244-3** | HSS TAPER ROUTER | 1 |
| 92. | **4244-4** | HSS TAPER ROUTER | 1 |
| 93. | **M2A016 (103-000-853)** | MINI MAGLITE 2-Cell AA Flashlight | 1 |
| 94. | **70-921** | POCKET MIRROR , ROUND DIA 7/8 | 1 |
| 95. | **70-925** | CIRCULAR POCKET MIRROR , ROUND | 1 |
| 96. | **S-2** | CIRCULAR POCKET MIRROR | 1 |
| 97. | **70-933-SP** | RETRIEVING TOOL, MAGNETIC | 1 |
| 98. | **CF-616** | PREC. FLEX. RULE SATIN CHROME | 1 |
| 99. | **508K** | ELECTRICAL CONNECTOR PLIER | 1 |
| 100. | **ZHBL-1200 (10936)** | BALL END KEY SET (12 PCS) INCH | 1 |

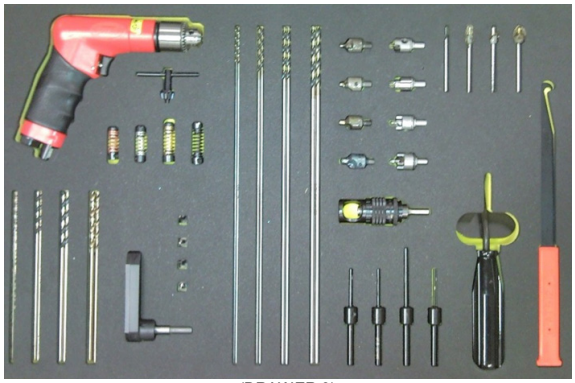

(DRAWER 3)

## DRAWER 5:

| Item | Part-Number | Description | Qty/Set |
|---|---|---|---|
| 101. | **ATBR-2125** | HI-LOK HAND TOOL 7/32 - 1/4 | 1 |
| 102. | **ATBR-2528** | HI-LOK HAND TOOL 1/4 - 9/32 | 1 |
| 103. | **ATBR-2531** | HI-LOK HAND TOOL 1/4 - 5/16 | 1 |
| 104. | **ATBR-3134** | HI-LOK HAND TOOL 5/16 - 11/32 | 1 |
| 105. | **ATBR-3137** | HI-LOK HAND TOOL 5/16 - 3/8 | 1 |
| 106. | **ATBR-4350** | HI-LOK HAND TOOL 7/16 - 1/2 | 1 |
| 107. | **ZRDA80-22** | HI LOK ROLLER RATCHET 7/32 | 1 |
| 108. | **ZRDA80-25** | HI LOK ROLLER RATCHET 1/4 | 1 |
| 109. | **ZRDA80-28** | HI LOK ROLLER RATCHET 9/32 | 1 |
| 110. | **ZRDA80-31** | HI LOK ROLLER RATCHET 5/16 | 1 |
| 111. | **ZRDA80-34** | HI LOK ROLLER RATCHET 11/32 | 1 |
| 112. | **ZRDA 80-37** | HI LOK ROLLER RATCHET 3/8 | 1 |
| 113. | **607-1/16** | WRENCH TIP ASSY | 1 |
| 114. | **607-5/64** | WRENCH TIP ASSY | 1 |
| 115. | **607-3/32** | WRENCH TIP ASSY | 1 |
| 116. | **57304 (609-1/8)** | WRENCH TIP ASSY - T-HANDLE | 1 |
| 117. | **57308 (609-5/32)** | WRENCH TIP ASSY - T-HANDLE | 1 |
| 118. | **EH-3579** | HI LOK COLLAR REMOVAL PLIER | 1 |
| 119. | **G-27** | CHERRY MAX HANDNIETGERÄT / HAND TOOL | 1 |
| 120. | **2-612 (CATGS-1)** | GRIP SCALE DAN5069-1 | 1 |
| 121. | **269C3** | CHERRY GRIP SCALE | 1 |
| 122. | **2-1522** | HI-LOK LEHREN/GAGES | 1 |

## DRAWER 6:

| Item | Part-Number | Description | Qty/Set |
|---|---|---|---|
| 123. | **560C** | STAUBSAUGER, KUNSTSTOFF<br>VACUUM, PLASTIC | 1 |
| 124. | **560CF-18** | VERLÄNGERUNG, FLEXIBEL<br>EXTENSION FOR VACUUM | 1 |
| 125. | **590 S** | BACK-SPOTFACER KIT | 1 |
| 126. | **590 TA** | BACK-COUNTERSINK KIT | 1 |
| 127. | **590-DBK** | DRILL BUSHING ASSEMBLY KIT | 1 |
| 128. | **501-R** | RIVET CUTTER | 1 |
| 129. | **65751220** | DRAHTWIRBELZANGE<br>SAFETY WIRE PLIER | 1 |
| 130. | **14 WA**<br>**DIA 0.020 (0,51 MM)** | SAFETY WIRE STAINLESS 1/4 LB | 1 |
| 131. | **15 WA**<br>**DIA 0.032 (0,81 MM)** | SAFETY WIRE STAINLESS 1/4 LB | 1 |
| 132. | **16 WA**<br>**DIA 0.041 (1,04 MM)** | SAFETY WIRE STAINLESS 1/4 LB | 1 |
| 133. | **75230001** | HEBEL-BLECHSCHERE, LINKS<br>AVIATION SNIP, LEFT | 1 |
| 134. | **75230002** | HEBEL-BLECHSCHERE, RECHTS AVIATION<br>SNIP, RIGHT | 1 |
| 135. | **53-1900RSK** | PRO RIVET SHAVER KIT | 1 |



(DRAWER 4)



(DRAWER 5)

# Composite Material Repair Tool Kit with dust collection system

## K-3000-MIL-1 / K-3000-HB

**The K-3000-MIL-1 is** a perfect addition to your hangar maintenance program.

This new kit is equipped with all the necessary pneumatic, hand tools and accessories to complete repairs on all types of composite materials including Kevlar. The kit includes installation and removal tools for blind rivets (Cherry Maxi-bolt® & Huck type stainless steel and Titanium Blind Bolts), Composi-Lok II® fasteners and Hi-Shear® (Hi-Lok/Hi-Lite) fasteners up to 1/4" diameter.
We supply the most current aerospace tooling in a state of the art mobile system, including router cut foam for rapid inventory and tool control.

### K-3000-MIL-1 Specifications

**Total Kit Weight (complete): 200 lbs.**

**Box 1 Dimensions:**
43"wide x 27.5" deep x 20" high w/ casters attached

**Box 2 Dimensions:**
27.3"wide x 20.5" deep x 13.7" high w/ casters attached

**Box Features:**
Extra handles including, Caster sets, Locking cable/hasps, Purge or fill valves, Airtight case systems.

**Box 1 Foam Trays:**
5 Layers, 8 Total Trays (Yellow & Black) sprayed with a protective coating for additional strength and resistance to fluids.








**Optional available** also in a storage box to have a mobile Composite shop! (K-3000-HB)



**Weitere Informationen auf Anfrage /** MORE INFORMATION ON REQUEST

Inhaltsverzeichnis Index


| | |
|---|---|
| Absaugsysteme | 157 -159 |
| Adapter, Sechskant auf Vierkant | 143 |
| Akku-Blindnietgerät | 236 |
| Akku-Blindnietgeräte-Satz | 237 |
| Annietmutter Blindnietgerät, pneumatisch | 250 |
| Annietmutter-Bohrmaschine, pneum. | 90 |
| Annietmutter-Bohrschablonen | 116 - 117 |
| Annietmutter-Niete, Handnietzange | 235 |
| Anschlaghalter, für Senker | 46 - 52 |
| Applikationswerkzeuge/Zubehör, Kleb-/Dichtstoffe | 166 - 172 |
| ASP - Steckschlüssel | 234 |
| Ausbauwerkzeug, Schrauben, für Niethammer | 147 |
| Ausbauwerkzeuge für Steckerstifte | 316 - 317 |
| Ausbauwerkzeuge, Collar-Meißel | 24 |
| Ausdreher, Ventil- | 148 |
| | |
| Bithalter, für Maschinen | 140 - 143 |
| Bithalter, Hand- | 144 |
| Bit-Knarren | 146 |
| Bits, French Recess | 125 |
| Bits, Mortorq | 125 |
| Bits, Phillips | 122 - 123 |
| Bits, Schlitz | 124 - 125 |
| Bits, Sechskant | 126 - 127 |
| Bits, Tamper Resistants Spanner | 127 |
| Bits, Torq-Set | 130 - 135 |
| Bits, Torx | 128 - 129 |
| Bits, Tri-Wing | 136 - 139 |
| Bits, Vierkant | 127 |
| Blechklemmen, handbetätigt | 8 |
| Blechklemmen, zangenbetätigt | 8 |
| Blechscheren, pneum. | 161 |
| Blindniet & Lockbolt Montagewerkzeuge | 232 - 260 |
| Blindnietgerät, Akku- | 236 |
| Blindnietgeräte-Sätze, Akku- | 237 |
| Blindnietgeräte-Sätze, Akku, Hand, pneumatisch | 238 - 239 |
| Blindnietmuttern-Einbauwerkzeuge | 235 |
| Boelube-Schmiermittel | 91 |
| Bohr-/Loch Positionierer | 313 |
| Bohranschläge | 114 |
| Bohrbuchsen | 114 |
| Bohrbuchsen-Satz | 114 |
| Bohrer, Doppelfasen- | 101 |
| Bohrer, für Annietmutter-Bohrmaschine | 90 |
| Bohrer, Hartmetall, Composite | 80 - 82 |
| Bohrer, Hartmetall, für Kohlefaser u. Kevlar | 60 |
| Bohrer, Hartmetall, Standard Längen | 80 |
| Bohrer, Kobalt (M42), extra lang, 150 mm | 108 - 109 |
| Bohrer, Kobalt (M42), extra lang, 300 mm | 110 - 111 |
| Bohrer, Kobalt (M42), Standard-Längen | 104 - 107 |
| Bohrer, Kobalt, zum Nietausbohren | 100 |
| Bohrer, mit Gewinde | 112 - 113 |
| Bohrer, PCD | 81 - 82 |
| Bohrer, Speer-, Hartmetall, Composite | 79 |
| Bohrmaschinen, pneum., Drehzahlregler | 91 |
| Bohrmaschinen, pneum., gerade Form | 94 |
| Bohrmaschinen, pneum., Pistolengriff | 91 - 93 |
| Bohrmaschinen, pneum., Winkelform | 95 - 96 |
| Bohr-Reibahlen, Hartmetall, Composite | 79 |
| Bohrschablonen, für Annietmuttern | 116 - 117 |
| Bohrschablonen, Heftnadeln | 1 |
| Bohrvorschubeinheit | 88 - 89 |
| BRILES, Senker | 53 |
| Bürsten, Massebürsten | 155 |
| | |
| C-Bügel, schwenkbar, für Nietpressen | 30 |
| Cherry, hydraulisches Handnietgerät G800 | 240 |
| Cherry, hydraulisches Handnietgerät, Satz, G800CMR | 241 |
| Cherry, Lehren | 234 |
| CherryLock "A", Nietgeräte, pneumatisch | 247 - 248 |
| CherryLock "A", Handnietzange | 235 |
| CherryLock, Nietgeräte, pneumatisch | 249 |
| CherryMax, Handnietzange | 235 |
| CherryMax, Nietgeräte, pneumatisch | 243 - 246 |
| Cleco Schrauber, Druckluft, Sechskantmutter | 4 |
| Cleco Schrauber, Druckluft, zylindrische Mutter | 6 - 7 |
| Cleco Schrauber, Batteriebetrieben, zylindrische Mutter | 6 |
| Cleco, Zange | 3 |
| Clecos, Heftnadeln | 1 - 7 |
| Collar Ausbauwerkzeuge, Hi-Lok | 189 - 191 |
| COMPOSI-LOK, Einbauwerkzeuge | 272 - 279 |
| COMPOSI-LOK, Einbauwerkzeuge, Satz | 303 - 309 |
| COMPOSI-LOK II, Einbauwerkzeuge | 290 - 299 |
| COMPOSI-LOK III, Einbauwerkzeuge | 300 - 302 |
| Composite Bohrer, Hartmetall, für Kevlar | 100 |
| Composite Bohr-Reibahlen, Hartmetall | 79 |
| Composite Hartmetall-Bohrer | 80 |
| Composite Lochsägen, Diamantbestückt | 76 |
| Composite Reparatur Kit | 334 |
| Composite Sägeblätter, Diamantbestückt | 75 |
| Composite Schaftfräser, Diamantbestückt | 77 |
| Composite Schneidwerkzeuge | 75 - 82 |
| Composite Senker | 60 - 61 |
| Composite Senker mit Zapfen, Diamantbestückt | 78 |
| Composite Speerbohrer, Hartmetall | 79 |
| Composite Stichsägeblätter, Diamantbestückt | 77 |
| CYCLO Poliermaschine, elektrisch, Doppel-Kopf | 331 |
| CYCLO Polierzubehör, Polierscheiben, Bürsten | 331 |
| | |
| DAN5109, Senker, mit Gewinde | 62 |
| DESTACO, Klemmen | 15 |
| Diamantbestückte Lochsägen, Composite | 76 |
| Diamantbestückte Sägeblätter, Composite | 75 |
| Diamantbestückte Schaftfräser, Composite | 77 |
| Diamantbestückte Senker mit Zapfen, Composite | 78 |
| Diamantbestückte Stichsägeblätter, Composite | 77 |
| Dichtstoff-Entferner, Winkelschleifer, pneumatisch | 168 |
| Dichtstoff-Fräser, mit Gewindeadapter | 168 |
| Dimpeleinsätze | 36 |
| Dimpeleinsätze, Satz | 37 |
| Dimpelmaschine, stationär | 17 |
| Doppel-Kopf Pliermaschine, CYCLO, elektrisch | 331 |
| Döpper | 20 - 23 |
| Döpper mit Kalotte | 20 - 23 |
| Döpper, HI-SHEAR | 23 |
| Dosierpistole, handbetätigt, SEMCO | 165 |

Dosierpistole, pneumatisch, SEMCO 165
Dosierpistolen-Zubehör, SEMCO 165
Duplikator, mit Bohrbuchse für Lochübertragung 115
Duplikator, mit Körner für Lochübertragung 115
Double Action-Nietgerät Mod. 200, pneumatisch 260
Draht-Wirbelzangen & Sätze 150 - 151
Druckluft-Staubsauger 156 - 157

Ein- u. Ausbauwerkzeuge, Hi-Lok, Hand- 176 - 191
Einbauwerkzeuge für Steckerstifte 316 - 317
Einbauwerkzeuge, COMPOSI-LOK 272 - 279
Einbauwerkzeuge, COMPOSI-LOK II 290 - 299
Einbauwerkzeuge, COMPOSI-LOK III 300 - 302
Einbauwerkzeuge, Hand-, Heli-Coil 326
Einbauwerkzeuge, JO-BOLT / VISU-LOK 262 - 271
Einbauwerkzeuge, VISU-LOK II 280 - 289
Einstelllehre (G784/GBP784B) 234
Endbearbeitungsmaschine, Rohr- 320
Entgratmesser, Hartmetall, für Rohrbearbeitung 320
Entgratwerkzeuge 118 - 119
Entgratwerkzeuge, Hand 152
Entlüfter, für hydropneum. Nietgeräte 234

Farbschneider, mit Gewinde 155
Federheftnadeln, Clecos 3
Feilen-Satz, Nadel- 160
Flachdöpper 20 - 23
Flachmeißel, für Niethammer 24
Flugzeugbauer Werkzeugsatz 332 - 333
Fräsbohrer, konisch 100
Fräser, Dichtstoff, mit Gewindeadapter 168
Fräser, für Kunststoffe 100
Fräser, für Nietfräse 39 - 40
Fräser, für pneum. Walzenfräser 41 - 45
Fräser, Waben- 73 - 74
Frässtifte, Hartmetall 83 - 85
Führungsreibahlen, HSS 102 - 103
Führungsstangen, Rückzugsenker/Planfräser 67
Führungszapfen, für Lochsägen 68 - 69
Führungszapfen, für Planfräser 71
Führungszapfen, für Plansenker 72
Führungszapfen, für Senker 54 - 62

Gegenhalteisen, Stahl 26 - 27
Gegenhalteisen-Satz, rückschlaggedämpft 28
Gegenhalter, Wolfram 25
Gewindeadapter-Bohrer 112 - 113
Gewindebohrer, Hand-, Heli-Coil 327 - 328
Gewindelehrdorne, Heli-Coil 329
Glättwerkzeuge/Zubehör, Kleb-/Dichtstoffe 166 - 172

Halosensor 313
Halter, Composite Lochsägen 76
Halter, für Schraubendrehereinsätze 140 - 143
Halter, mit Innengewinde 53
Handeinbauwerkzeuge, Heli-Coil 326
Handeinbauwerkzeuge, Slimsert 330
Hand-Entgratwerkzeuge 152
Hand-Gewindebohrer, Heli-Coil 327 - 328
Hand-Halter, für Schraubendrehereinsätze 144
Hand-Blechklemmen 8
Hand-Kelchwerkzeuge 318 - 319
Hand-Nibbler 163
Handnietgerät, hydraulisch, Cherry, G800 240
Handnietgerät, Satz, hydraulisch, Cherry, G800CMR 241
Handnietpressen 29 - 30
Handnietzange, Annietmutter-Niete 235
Handnietzange, CherryLock "A" 235
Handnietzange, CherryMax 235
Hartmetall-Bohrer, Composite 80
Hartmetall-Bohrer, Standard Länge 80
Hartmetall-Entgratmesser, für Rohrbearbeitung 320
Hartmetall-Frässtifte 83 - 85
Hartmetall-Schleifstifte 83 - 85
Hebelwerkzeuge 171
Heftnadeln für Bohrschablonen 1
Heftnadeln (Spannwerkzeuge) 1 - 7
Heftnadeln, Clecos 1 - 7
Heftnadelschrauber, Druckluft, Sechskantmutter 4
Heftnadelschrauber, Druckluft, zylindrische Mutter 6 - 7
Heftnadelschrauber, Batteriebetrieben, zylindrische Mutter 6
Heftnadelzange 3
Heißluftgebläse, Akku betrieben 164
Heli-Coil Gewindelehrdorne 329
Heli-Coil Hand-Einbauwerkzeuge 326
Heli-Coil Hand-Gewindebohrer 327 - 328
Helicon PCD Bohrer 82
Hi-Lok Nuss, mit Öffnung/Auswurf 177
Hi-Lok, Collar Ausbauzange 191
Hi-Lok, Ein- u. Ausbau-Handwerkzeuge 176 - 191
Hi-Lok, Lehren 175
Hi-Lok, Ratschen, pneumat. 213 - 230
Hi-Lok, Schrauber mit Winkelfuß, Pistolengriff 199 - 212
Hi-Lok, Schrauber, autom. Collarzuführung 231
Hi-Lok, Schrauber, Ein- u. Ausbau, Satz 193 - 196
Hi-Lok, Schrauber, gerade, Pistolengriff 197 - 198
Hi-Lok, Stiftschlüssel 174
HI-SHEAR, Döpper 23
Hi-Torque Schraubwerkzeuge 121
Hohlfräser, mit Gewinde 68
Hydraulisches Handnietgerät, Cherry, G800 240
Hydraulisches Handnietgerät, Satz, Cherry, G800CMR 241
Hydraulisches-Handnietgerät für Blindnietmuttern 261

JO-BOLT / VISU-LOK, Einbauwerkzeuge 262 - 271
JO-BOLT / VISU-LOK, Einbauwerkzeuge, Satz 303 - 309

Kelchwerkzeuge, Hand- 318 - 319
Kleb-/Dichtstoffe, Applikationswerkzeuge/Zubehör 166 - 172
Klemmen, Kniehebel 9 - 16
Kniehebelspanner 9 - 16
KNU-VISE, Klemmen 9 - 14
Konische Fräsbohrer 100
Kugelkopf, Sechskant-Winkelschlüssel-Satz 146
Kunststoff-Fräser 100

Lehre, Einstell- (G784/GBP784B) 234
Lehren, Cherry Niete 234
Lehren, Hi-Lok 175
Lehren, Huck Niete 234
Lineale, Stahl- 148
Lochsägen 68 - 69
Lochsägen, Diamantbestückt, Composite 76
Lochsucher mit Bohrbuchse 115
Lochsucher mit Körner 115
Lockbolt Nietgeräte, pneumatisch 255 - 259
Lockbolt & Blindniete Montagewerkzeuge 232 - 260
Luftfahrt-Blindniete, Nietgeräte, pneumatisch 251 - 254
Luftregulierventil 18

MagLite, Taschenlampen 160
Magnet-Heber 149
Massebürsten 155
Meißel, Collar, Lockbolts 24
Meißel, für Niethammer 24
Messlehren, TRULOK 314 - 315
Montagewerkzeuge, Blindniete & Lockbolts 232 - 260

Nadelfeilen-Satz 160
Nibbler, Hand- 163
Nibbler, pneumatisch 163
Nietausbohrer, Kobalt 100
Nietaustreiber, für Niethammer 24
Nieteinsätze 36
Nieteinsätze, Satz 37
Nietfräse, Satz, pneumatisch 39
Nietfräsen, pneumatisch 38 - 40
Nietfräser, Hartmetall bestückt 40
Nietgerät Mod. 200, pneumatisch, Double Action 260
Nietgerät, pneumatisch, Annietmutter-Blindniete 250
Nietgeräte, pneumatisch, CherryLock 249
Nietgeräte, pneumatisch, CherryLock "A" 247 - 248
Nietgeräte, pneumatisch, CherryMax 243 - 246
Nietgeräte, pneumatisch, Lockbolt 255 - 259
Nietgeräte, pneumatisch, Luftfahrt Blindniete 251 - 254
Nietgeräte, pneumatisch, Standard Blindniete 250 - 254
Nietgeräte, Split-, Blindniet & Lockbolt Montage 233
Nietgeräte-Sätze, Blindniet & Lockbolt Montage 233
Niethammer, pneumatisch 18 - 19
Niethammer, Rückschlaggedämpft 19
Niethammer, Satz 19
Nietmaschine, stationär 17
Nietpressen, handbetätigt 29 - 30
Nietpressen, pneumatisch 31 - 33
Nietpressen, pneumatisch, Tisch-/Ständermontage 34 - 35
Nietstiftfräser 311
Nietschere, Hand 153
Nietschere, Schraubstock 153
Nuss, Hi-Lok, mit Öffnung/Auswurf 177

Optisches Tiefen-Mikrometer 312

PCD Senker 60 - 61
PCD-Bohrer 81 - 82
Planfräser, Rückzug 64 - 67
Plansenker, Hartmetall, mit Gewinde 72
Plansenker, mit geradem Schaft 70
Plastikkappe, für Döpper 20
Pneumatische Nibbler 163
Poliermaschine, CYCLO, elektrisch, Doppel-Kopf 331
Polier-Zubehör, CYCLO, Polierscheiben, Bürsten 331
Prüfgerät, für Seilspannung 324 - 325
Prüfgerät, für Zugfestigkeit von Seilschuhen 322

Quetschgerät, für Seilschuhe, mechanisch 323

Ratschen, Hi-Lok, pneumatisch 213 - 230
Reibahlen, mit Führung, HSS- 102 - 103
Reifenprofil-Tiefenmesslehre 148
Ringschlüssel, für Rohrverschraubungen 154
Rohr-Endbearbeitungsmaschinen 320
Rollenscheren, pneum. 162
Rückzug-Planfräser 64 - 67
Rückzug-Senker 64 - 67

Sägeblätter, Diamantbestückt, Composite 75
Schaftfräser, Diamantbestückt, Composite 77
Scheren, Blech-, pneumatisch 161 - 162
Schlagschere, pneumatisch 161
Schleifstifte, Hartmetall 83 - 85
Schmiermittel, Boelube 91
Schneider, Farbe, mit Gewinde 155
Schraubenausdreher, mit Vierkantschaft 147
Schraubendreher, Hand, Phillips 145
Schraubendreher, Hand, Torq-Set 145
Schraubendreher, Hand, Tri-Wing 145
Schraubendrehereinsätze, French Recess 125
Schraubendrehereinsätze, Hi-Torque 121
Schraubendrehereinsätze, Mortorq 125
Schraubendrehereinsätze, Phillips 122 - 123
Schraubendrehereinsätze, Schlitz 124 - 125
Schraubendrehereinsätze, Sechskant 126 - 127
Schraubendrehereinsätze, Torq Set 130 - 135
Schraubendrehereinsätze, Torx 128 - 129
Schraubendrehereinsätze, Tri-Wing 136 - 139
Schraubendrehereinsätze, Vierkant 127
Schraubenlöser, für Niethammer 147
Schraubenlöser, mit Bithalter 147
Schrauber, Hi-Lok, autom. Collarzuführung 231
Schrauber, Hi-Lok, Ein- u. Ausbau, Satz 193 - 196
Schrauber, Hi-Lok, gerade, Pistolengriff 197 - 198
Schrauber, Hi-Lok, mit Winklfuß, Pistolengriff 199 - 212
Schrauber, pneumatisch, für Bits 120
Schraubglocken, Heftnadeln 2
Schraubheftnadeln, Flügelmutter 5
Schraubheftnadeln, Rändelmutter 2
Schraubheftnadeln, Sechskantmutter 4
Schraubheftnadeln, zylindrische Mutter 6 - 7
Schraubwerkzeuge 122 - 146
Schwenkbügel, für Nietpressen 30

Sealant Werkzeuge 165 - 172
Sealant, Hebelwerkzeuge 171
Sealant, Niethammer Spachtel 172
Sechskant-Winkelschlüssel-Satz, Kugelkopf 146
Seilhämmergerät, pneumatisch, Satz 321
Seilschuh-Quetschgerät, mechanisch, Satz 323
Seilspannungs-Prüfgeräte 324 - 325
Seitenschneider, für Nietstifte 153
SEMCO Dosierpistole, handbetätigt 165
SEMCO Dosierpistole, pneumatisch 165
SEMCO, Dosierpistolen, Zubehör 165
Senk-Anschlaghalter 46 - 52
Senker mit Zapfen, Diamantbestückt, Composite 78
Senker, für BRILES Niete 53
Senker, für Kohlefaser u. Kevlar 60
Senker, mit geradem Schaft 62 - 63
Senker, mit Gewinde 53 - 62
Senker, mit Gewinde, DAN5109 62
Senker, PCD 60 - 61
Senker, Rückzug 64 - 67
Sicherungsdraht, Edelstahl 151
Slimsert Handeinbauwerkzeuge 330
Snap-Soc 20
SPACEMATIC, Annietmutter-Bohrmaschine 90
Spachtel 170 - 171
Spachtel, für Niethammer 172
Spänehaken, Hand 152
Spannzangen 97
Speerbohrer, Hartmetall, Composite 79
Spiegel, Inspektion 149
Split-Nietgeräte, Blindniet & Lockbolt Montage 233
Stabschleifer, Pneumatisch 87
Stahl-Gegenhalter 26 - 27
Stahllineale 148
Standard Blindniet-Geräte, pneumatisch 250 - 254
Stationäre Dimpelmaschine 17
Stationäre Nietmaschine 17
Staubsauger, Druckluft 156 - 157
Steckschlüssel für Muttern 142
Steckschlüssel, Sechskant-, mit Vierkantantrieb 1/4" 143
Steckscklüssel, ASP-Niete 234
Stichsägeblätter, Diamantbestückt, Composite 77
Stiftauffangbeutel (Blindnietgeräte) 234
Stiftschlüssel, Hi-Lok 174
Suchspiegel 149

Taschenlampen, MagLite 160
Tiefenmesslehre, Reifenprofil- 148
Tiefen-Mikrometer, optisch 312
Tisch-Nietpressen, pneumatisch 34 - 35
Trennschleifer für Nietstifte 310
TRULOK, Messlehren 314 - 315

Vakuumsauger, Waben-, Fehlerprüfung 173
Ventil-Ausdreher 148
Verlängerung, Sechskant auf Vierkant 143
VISU-LOK / JO-BOLT, Einbauwerkzeuge 262 - 271
VISU-LOK / JO-BOLT, Einbauwerkzeuge, Satz 303 - 309
VISU-LOK II, Einbauwerkzeuge 280 - 289

Waben-Fehlerprüfung, Vakuumsauger 173
Wabenfräser 73 - 74
Walzenfräse, pneumatsich 41 - 45
Warzeinsätze 36
Warzeinsätze, Satz 37
Werkzeugsatz, Flugzeugbauer 332 - 333
Winkelbohrfutter, Winkelgetriebe 98 - 99
Winkelschleifer, pneumatisch 86
Winkelschleifer, pneumatisch, Dichtstoff-Entferner 168
Wirbelzangen, für Drahtsicherung 150 - 151
Wolfram-Gegenhalter 25

Zange, für Hi-Lok, Collar Ausbau 191
Zange, für Leichtmetallverschraubungen 155
Zange, Heftnadeln & Blechklemmen 3
Zangen, für Blindnietmuttern 235
Zangen, für Drahtsicherung 150 - 151
Zugfestigkeitstester, für Seilschuhe 322
Zugköpfe für Cherry G800 242
Zugköpfe, CherryLock 249
Zweifasen-Bohrer 101

| | |
|---|---|
| Adapter, Hex Shank Drive to Male Square | 143 |
| Aerospace Blind Rivets, Riveter, pneumatic | 251 - 254 |
| Air Bleeder, for hydropneum. Riveter | 234 |
| Angel Drills, Offset | 86 |
| Angle Drill, pneumatic | 95 - 96 |
| Application Tools/Accessories, Sealant | 166 - 172 |
| ASP - Driver | 234 |
| Back Countersink Cutter | 64 - 67 |
| Back Spotfacer Cutter | 64 - 67 |
| Bench-Riveter, pneumatic | 34 - 35 |
| Bit Holder, for Machines | 140 - 143 |
| Bit Holders, Hand- | 144 |
| Bit Ratchet, Hand- | 146 |
| Bits, French Recess | 125 |
| Bits, Hi-Torque | 121 |
| Bits, Mortorq | 125 |
| Bits, Phillips | 122 - 123 |
| Bits, Slotted | 124 - 125 |
| Bits, Socket Head (Allen) | 126 - 127 |
| Bits, Square Recess | 127 |
| Bits, Torq-Set | 130 - 135 |
| Bits, Torx | 128 - 129 |
| Bits, Tri-Wing | 136 - 139 |
| Blind Rivet & Lockbolt Installation Tools | 232 - 260 |
| Blind-Rivet-Nut, Installation Tools | 235 |
| Boelube Lubricant | 91 |
| Brass Air Tool Regulator | 18 |
| BRILES, Countersink Tools | 53 |
| Brushes, for Rivet Holes | 155 |
| Bucking Bar Kit, Recoilless | 28 |
| Bucking Bars, Steel | 26 - 27 |
| Bucking Bars, Tungsten | 25 |
| Burraway Tools | 118 - 119 |
| Burrs, Solid Carbide | 83 - 85 |
| Cable Swaging Tool Kit, mechanic, portable | 323 |
| Cable Swaging Tool Kit, pneumatic, portable | 321 |
| Cable Tensiometer | 324 - 325 |
| Carbide Deburring Blades, for Tubes/Pipes | 320 |
| Cherry, Gages | 234 |
| Cherry, Hydraulic Hand Riveter G800 | 240 |
| Cherry, Hydraulic Hand Riveter Kit, G800CMR | 241 |
| CherryLock "A", Hand-Riveter | 235 |
| CherryLock "A", Riveter, pneumatic | 247 - 248 |
| CherryLock, Riveter, pneumatic | 249 |
| CherryMax, Hand-Riveter | 235 |
| CherryMax, Riveter, pneumatic | 243 - 246 |
| Chip Chaser, Hand | 152 |
| Chisel, Collar, Lockbolts | 24 |
| Chisel, for Rivet Hammer | 24 |
| Clamps, Hand operated | 8 |
| Clamps, Plier operated | 8 |
| Clamps, Toggle | 9 - 16 |
| Cleaner, Air | 156 |
| Cleco Tool, Hand operated, Cylindrical-Nut | 6 - 7 |
| Cleco Tool, pneumatic, Cylindrical-Nut | 6 - 7 |
| Cleco Tool, pneumatic, Hex-Nut | 4 |
| Cleco, Plier | 3 |
| Clecos | 1 - 7 |
| Clecos, Cylindrical Body | 6 - 7 |
| Clecos, Fasteners | 1 - 7 |
| Clecos, Hex Nut | 4 |
| Clecos, knurled Nut | 5 |
| Clecos, Plier & Hand operated | 3 |
| Clecos, Wing Nut | 5 |
| Collar Removal Tools, Hi-Lok | 189 - 191 |
| Collets | 97 |
| Commercial Blind Riveter, pneumatic | 250 - 254 |
| COMPOSI-LOK II, Installation Tools | 290 - 299 |
| COMPOSI-LOK, Installation Tool-Kits | 303-309 |
| COMPOSI-LOK, Installation Tools | 272 - 279 |
| COMPOSI-LOK III, Installation Tools | 300 - 302 |
| Composite Countersink Cutter | 60 - 61 |
| Composite Cutting Tools | 75 - 82 |
| Composite Dagger-Drills, Carbide | 79 |
| Composite Drill-Reamer, Carbide | 79 |
| Composite Drills, Carbide, for Kevlar | 100 |
| Composite Drills, Solid Carbide | 80 |
| Composite Hole Saws, Diamond plated | 76 |
| Composite Jigsaw Blades, Diamond plated | 77 |
| Composite piloted Countersink, Diamond plated | 78 |
| Composite Material Repair Tool Kit | 334 |
| Composite Routers, Diamond plated | 77 |
| Composite Saw Blades, Diamond plated | 75 |
| Cordless Blind Riveter | 236 |
| Cordless Blind Riveter Kit | 237 |
| Counterbores, Carbide, threaded Shank | 72 |
| Counterbores, straight Shank | 70 |
| Countersink Cutter, Back- | 64 - 67 |
| Countersink Cutter, Composite | 60 - 61 |
| Countersink Cutter, PCD | 60 - 61 |
| Countersink Cutter, straight Shank | 63 |
| Countersink Cutter, threaded Shank | 53 - 62 |
| Countersink Cutter, threaded Shank, DAN5109 | 62 |
| Countersink, Micro-Stops | 46 - 52 |
| Cutter, Countersink, for BRILES Rivets | 53 |
| Cutter, for pneum. Weld Shaver | 41 - 45 |
| Cutter, for Rivet Shaver | 38 - 40 |
| Cutter, Honeycomb | 73 - 74 |
| Cutter, Paint, threaded shank | 155 |
| Cutter, Sealant Removal, threaded shank | 168 |
| CYCLO Polishing Accessories, Brushes, Pads | 331 |
| CYCLO Polishing Machine, electrical, Dual Head | 331 |
| C-Yoke, Swivel, for Compression Riveters | 30 |
| Dagger-Drills, Carbide, Composite | 79 |
| DAN5109, Countersink Cutter, threaded Shank | 62 |
| Deburring Blades, Carbide, for Tubes/Pipes | 320 |
| Deepth Micrometer, optical | 312 |
| Depth Gauge, Tyre Tread- | 148 |
| DESTACO, Clamps | 15 |
| Diamond plated Hole Saws, Composite | 76 |
| Diamond plated Jigsaw Blades, Composite | 77 |
| Diamond plated piloted Countersink, Composite | 78 |
| Diamond plated Routers, Composite | 77 |
| Diamond plated Saw Blades, Composite | 75 |
| Dies, Dimple | 36 |
| Dies, Dimple, Kits | 37 |
| Dimple Die Kits | 37 |

Dimple Dies 36
Dimpling Machine, stationary 17
Double Action-Riveter Mod. 200, pneumatic 260
Double Margin Drill 101
Drill Bushing Kit 114
Drill Bushing Strap Duplicators 115
Drill Bushings 114
Drill Jigs, for Anchor Nuts 116 - 117
Drill Position Targeting System 313
Drill Stops 114
Drill-Reamer, Carbide, Composite 79
Drills, Carbide, for Composite 60
Drills, Cobalt, extra long, 12" 110 - 111
Drills, Cobalt, extra long, 6" 108 - 109
Drills, Cobalt, Jobber Length 104 - 107
Drills, Cobalt, Rivet Knockout 100
Drills, Dagger-, Carbide, Composite 79
Drills, Double Margin 101
Drills, for Nutplate-Drillmotor 90
Drills, PCD 81 - 82
Drills, pneumatic, Angle Head 95 - 96
Drills, pneumatic, Pistol-Grip 91 - 93
Drills, pneumatic, Straight Handle 94
Drills, pneumatic, with Governor 91
Drills, Solid Carbide, Composite 80
Drills, Solid Carbide, Jobber length 80
Drills, Threaded Shank Adapter 112 - 113
Driver, ASP-Rivets 234
Dual Head Polishing Machine, CYCLO, electrical 331
Duplicator, Strap, Drill Bushing Type 115
Duplicator, Strap, Punch Type 115

Edge Breaker, Hand Tool 152
End Finishing Machines, Tube/Pipe- 320
Extensions, Hex Shank Drive to Male Square 143

Fastener, Plier 3
File Set, Needles- 160
Flaring Tools, Hand- 318 - 319
Flashlights, MagLite 160
Flat-Chisel, for Rivet Hammer 24
Flush Rivet Sets 20 - 23
French Recess Bits 125

Gage, Shift Setting- (G784/GBP784B) 234
Gages, Cherry Rivets 234
Gages, Hi-Lok 175
Gages, Huck Rivets 234
Gages, TRULOK 314 - 315
Grinder, Angle Die, pneumatic, Sealant Removal 168

Halosensor 313
Hand Bit Holder 144
Hand Flaring Tools 318 - 319
Hand Inserting Tools, Heli-Coil 326
Hand Inserting Tools, Slimsert 330
Hand Rivet Squeezer 29 - 30
Hand Riveter Kit, hydraulic, Cherry, G800CMR 241
Hand Riveter, hydraulic, Cherry, G800 240
Hand Taps, Heli-Coil 326 - 328
Hand Tool, Edge Breakers 152
Handi-Klamps 8
Hand-Nibbler 163
Hand-Riveter, CherryLock "A" 235
Hand-Riveter, CherryMax 235
Hand-Riveter, Nutplate-Rivets 235
Heli-Coil Hand Inserting Tools 326
Heli-Coil Hand Taps 327 - 328
Heli-Coil Thread Gages 329
Helicon PCD Drills 82
Hex-Ball, L-Wrenches 146
Hex-Keys, Hi-Lok 174
Hi-Lok Socket, Hex Ecjecting 177
Hi-Lok, Collar Removal Plier 191
Hi-Lok, Gages 175
Hi-Lok, Hand Installation & Removal Tools 176 - 191
Hi-Lok, Hex-Keys 174
Hi-Lok, Machine, Automatic Collar Feed 231
Hi-Lok, Machine, Installation & Removal Kits 193 - 196
Hi-Lok, Machine, L-Head, Pistol Grip 199 - 212
Hi-Lok, Machine, Straight, Pistol Grip 197 - 198
Hi-Lok, Ratchets, pneumatic 213 - 230
HI-SHEAR, Rivet Set 23
HI-Torque Driver 121
Holder, for Bits 140 - 143
Holder, for Composite Hole Saws 76
Holder, with internal thread 53
Hole Saws 68 - 69
Hole Saws, Diamond plated, Composite 76
Hollow Cutter, threaded Shank 68
Honeycomb Cutter 73 - 74
Honeycomb Damage Detecting, Vacuum Cup 173
Hot Air Gun, cordless, Accu rechargeable 164
Hydraulic Hand Riveter Kit, Cherry, G800CMR 241
Hydraulic Hand Riveter, Cherry, G800 240
Hydraulic Hand Riveter/Nutsetter 235

Inserting Tools, Hand, Heli-Coil 326
Inspection-Mirrors 149
Installation & Removal Tools, Hi-Lok, Hand-Tools 176 - 191
Installation Tool, Hand operated, Cylindrical-Nut 6 - 7
Installation Tool, pneumatic, Cylindrical-Nut 6 - 7
Installation Tool, pneumatic, Hex-Nut 4
Installation Tools for Connector Contacts 316 - 317
Installation Tools, Blind Rivets & Lockbolts 232 - 260
Installation Tools, COMPOSI-LOK 272 - 279
Installation Tools, COMPOSI-LOK II 290 - 299
Installation Tools, COMPOSI-LOK III 300 - 302
Installation Tools, JO-BOLT / VISU-LOK 262 - 271
Installation Tools, VISU-LOK II 280 - 289

Jigsaw Blades, Diamond plated, Composite 77
JO-BOLT / VISU-LOK, Installation Tool-Kits 303 - 309
JO-BOLT / VISU-LOK, Installation Tools 262 - 271

Knock-Out Punches, for Rivet Hammer 24
KNU-VISE, Clamps 9 - 14

Lockbolt & Blind Rivet Installation Tools 232 - 260
Lockbolt Riveter, pneumatic 255 - 259
Lubricant, Boelube 91
L-Wrenches, Hex Ball 146

Machine, Hi-Lok, Automatic Collar Feed 231
Machine, Hi-Lok, Installation & Removal Kits 193 - 196
Machine, Hi-Lok, L-Head, Pistol Grip 199 - 212
Machine, Hi-Lok, Straight, Pistol Grip 197 - 198
MagLite, Flashlights 160
Magnetic Retrieving Tool 149
Metal Cutting Shears, pneumatic 161
Micro-Stop, Countersinks 46 - 52
Mirrors, Inspection 149
Mortorq, Bits 125

Needle File Set 160
Nibbler, Hand- 163
Nibbler, pneumatic 163
Non-Metallic Router 100
Nutplate-Drillmotor 90
Nut Setters 142
Nutplate Riveter, pneumatic 250
Nutplate-Rivets, Hand-Riveter 235
Nut-Setter, Fasteners 2

Offset Angle Drills 98 - 99
Optical Deepth-Micrometer 312

Paint Cutter, threaded shank 155
PCD Countersink Cutter 60 - 61
PCD Drills 81 - 82
Phillips Bits 122 - 123
Piloted Countersink, Diamond plated, Composite 78
Piloted Reamers, HSS 102 - 103
Pilots, for Back Countersinks/Spotfacer 67
Pilots, for Counterbores with straight Shank 71
Pilots, for Countersink Cutters 54 - 62
Pilots, for Hole Saws 68 - 69
Pilots, for Stop Counterbores 72
Pintail Milling Unit 311
Plastic Cap, for rivet set 20
Plate Nut Drill Jigs 116 - 117
Plier, Fastener & Clamps 3
Plier, for electrical Connectors 155
Pliers, for Blind Nuts 235
Pliers, for Hi-Lok, Collar Removal 191
Pliers, for Safety Wire 150 - 151
Pneumatic Nibbler 163
Polishing Equipment, CYCLO, Brushes, Pads 331
Polishing Machine, CYCLO, electrical, Dual Head 331
Positive Feed Drill 88 - 89
Pry Tools, Sealant 171
Pulling Heads for G800 242
Pulling Heads, CherryLock 249
Pulling Heads, Double Action, Mod. 200 260
Pull-Tester Kit, for swaged cable terminals 322
Punch Type Strap Duplicators 115

Ratchets, Hi-Lok, pneumatic 213 - 230
Reamers, Piloted, HSS- 102 - 103
Removal Tool, Collar Chisel 24
Removal Tool, Screw, for Rivet Gun 147
Removal Tool, Valve Core 148
Removal Tools for Connector Contacts 316 - 317
Rivet Cutter, Bench Type 153
Rivet Cutter, Carbide tipped 40
Rivet Cutter, Hand 153
Rivet Gun Kit 19
Rivet Gun, pneumatic 18 - 19
Rivet Gun, recoilless 19
Rivet Hole Brush 155
Rivet Knock-Out Drill, Cobalt 100
Rivet Sets 20 - 23
Rivet Sets, HI-SHEAR 23
Rivet Sets, Universal Head 20 - 23
Rivet Shaver, pneumatic 38 - 40
Rivet Shaver, pneumatic, Kit 39
Rivet Stem Shaver 310
Rivet Squeezer Kits 37
Rivet Squeezer Sets 36
Rivet Squeezer, Hand 29 - 30
Rivet Squeezer, pneumatic 31 - 33
Rivet Squeezer, pneumatic, Bench Models 34 - 35
Riveter Kits, Blind Rivet & Lockbolt Installation 233
Riveter Kits, Blind, cordless 237
Riveter Kits, Blind, cordless, manual, pneumatic 238 - 239
Riveter Mod. 200, pneumatic, Double Action 260
Riveter, Blind, cordless 236
Riveter, pneumatic, Aerospace Blind Rivets 251 - 254
Riveter, pneumatic, CherryLock 249
Riveter, pneumatic, CherryLock "A" 247 - 248
Riveter, pneumatic, CherryMax 243 - 246
Riveter, pneumatic, Commercial Blind Rivets 250 - 254
Riveter, pneumatic, Lockbolt 255 - 259
Riveter, pneumatic, Nutplate Rivets 250
Riveter, Split-, Blind Rivet & Lockbolt Installation 233
Riveting Machine, stationary 17
Roll-Shears, pneumatic 162
Rotary Files, Solid Carbide 83 - 85
Router, Diamond plated, Composite 77
Router, Non-Metallic Materials 100
Router, Taper 100
Rules, Steel- 148

Safety Wire, Stainless Steel 150 - 151
Saw Blades, Diamond plated, Composite 75
Scraper, for Rivet Gun, Sealant 172
Scraper, Sealant 170 - 171
Screw Extractor, with square shank 147
Screw Removal Tool, for Rivet Gun 147
Screwdriver Tools 122 - 146
Screwdriver, Hand, Phillips 145
Screwdriver, Hand, Torq-Set 145
Screwdriver, Hand, Tri-Wing 145
Screwdriver, pneumatic, for Bits 120
Screw-Removal Tool, with Bitholder 147
Sealant Application Tools/Accessories 165 - 172
Sealant Gun Accessories, SEMCO 165

Sealant Gun, manual, SEMCO 165
Sealant Gun, pneumatic, SEMCO 165
Sealant Removal Angle Die Grinder, pneumatic 168
Sealant Removal Cutter, threaded shank 168
Sealant Scraper for Rivet Gun 172
Sealant Tools 165 - 172
Sealant, Pry Tools 171
SEMCO Sealant Gun, manual 165
SEMCO Sealant Gun, pneumatic 165
SEMCO, Accessories, Sealant Gun 165
Shears, Sheet Metal, pneumatic 161 - 162
Sheet Metal Tool Kit 332 - 333
Shift Setting Gage (G784/GBP784B) 234
Side Nipper, for Rivet Stems 153
Slimsert Hand Inserting Tool 330
Slotted Bits 124 - 125
Smoothing Tools/Accessories, Sealant 166 - 172
Snap-Soc 20
Socket Head (Allen) Bits 126 - 127
Socket, Hi-Lok, Hex Ejecting 177
Sockets, Hex, Square-Drive 1/4" 142
Solid Carbide Burrs 83 - 85
Solid Carbide Drills, Composite 80
Solid Carbide Drills, Jobber Length 80
Solid Carbide Rotary Files 83 - 85
SPACEMATIC, Nutplate Drillmotor 90
Split-Riveter, Blind Rivet & Lockbolt Installation 233
Spotfacer, Back 64 - 66
Square Recess Bits 127
Stationary Dimpling Machine 17
Stationary Riveting Machine 17
Steel Rules 148
Steel-Bucking Bars 26 - 27
Stem Catcher Bag (Riveter) 234
Straight Die Grinder, pneumatic 87
Swaging Tool Kit, for Cable Terminals 323
Swivel Yoke, for Compression Riveters 30

Tab-Shear, pneumatic 161
Taper Router 100
Taps, Hand-, Heli-Coil 326 - 328
Temporary Fasteners 1 - 7
Tester, for Cable Tension 324 - 325
Tester, Pull-, for Cable Terminals 322
Thread Gages, Heli-Coil 329
Threaded Shank Adapter Drills 112 - 113
Toggle Pliers & Clamps 9 - 16
Tool Kit, Sheet Metal 332 - 333
Torq-Set Bits 130 - 135
Torx Bits 128 - 129
Tri-Wing Bits 136 - 139
TRULOK, Gages 314 - 315
Tube/Pipe End Finishing Machines 320
Tungsten-Bucking Bars 25
Twisters, for Safety Wire 150 - 151
Tyre Tread Depth Gauge 148

Vacuum Cleaner, pneumatic 156
Vacuum Cup, Honeycomb Damage Detecting 173
Vacuum, Dust Control 157 - 159
Valve Core Removal Tool 148
VISU-LOK / JO-BOLT, Installation Tool-Kits 303 - 309
VISU-LOK / JO-BOLT, Installation Tools 262 - 271
VISU-LOK II, Installation Tools 280 - 289

Weld Shaver, pneumatic 41 - 45
Wire Twister & Kits 150 - 151
Wrench, Tube Fitting, Snap Type 154

# KALTVERFORMUNG
# COLDWORKING

## The Split Sleeve Cold Expansion Process

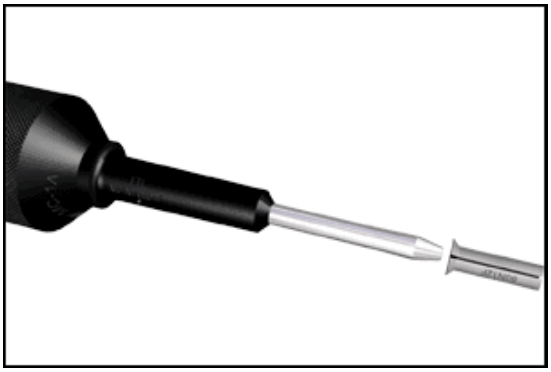

Step 1.
**After verifying the starting hole size, slip the pre-lubricated split sleeve onto the mandrel, which is attached to the hydraulic puller unit.**

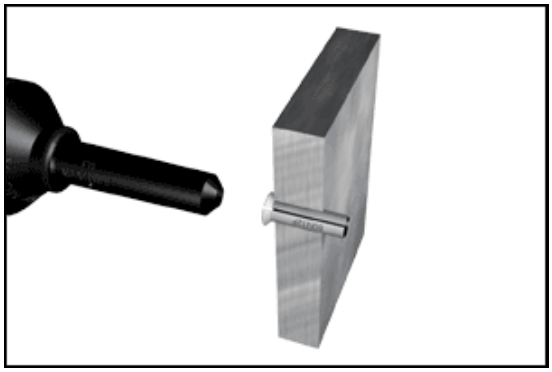

Step 4.
**Remove and discard sleeve**

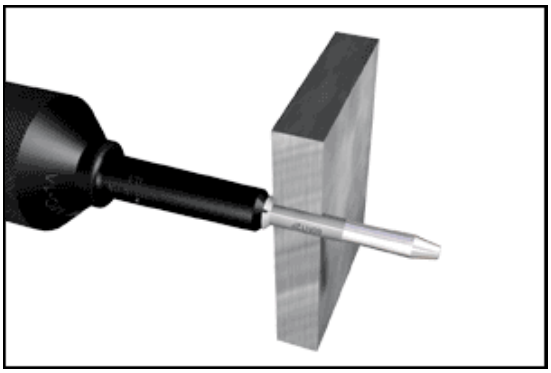

Step 2.
**Insert the mandrel and sleeve through the hole with the nosecap held firmly against the work piece.**

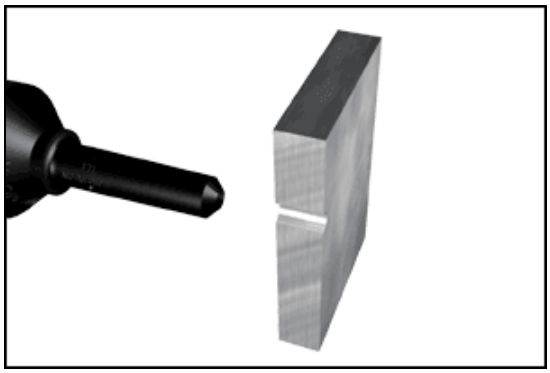

Step 5.
**Ream hole to final size.**
**Use pin-end of combination gage to confirm size.**

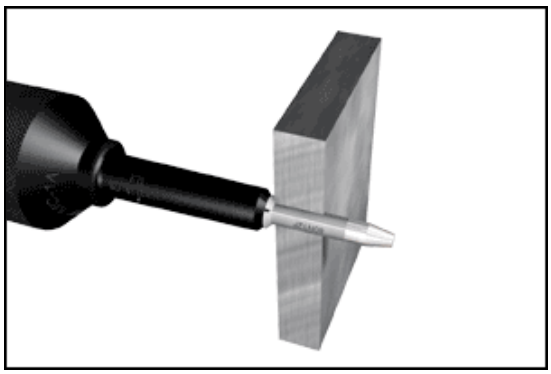

Step 3.
**Activate the puller unit. The mandrel is drawn through the sleeve and the hole. The combined thickness of the sleeve and the mandrel major diameter radially expand the hole. The lubricated sleeve reduces the pull force required, protects the hole, and allows the mandrel to exert radial forces through the entire thickness of the material.**

**Informationen über Werkzeuge, Hülsen und Dorne auf Anfrage !**

INFORMATIONS FOR TOOLS, SLEEVES AND MANDRELS ON REQUEST !